Lull®

Illustrated Parts Manual

Model
644E-42
944E-42

S/N 17569 thru 20123
& 0160002514 & After

8990462

Revised
August 6, 2009

JLG®
An Oshkosh Corporation Company

EFFECTIVITY PAGE

February 4, 2005 - D - Revised Manual

November 10, 2005 - E - Revised Manual

October 9, 2007 - F - Revised Manual

July 2, 2008 - G - Revised Manual (Manual edited to B/M 644E - 0010626 Revision 28)

(Manual edited to B/M 944E - 0010627 Revision 26)

January 16, 2009 - H - Revised Manual

August 6, 2009 - I - Revised Manual

EFFECTIVITY PAGE

TABLE OF CONTENTS

FIGURE NO.	TITLE	PAGE NO.
SECTION 1 – FRAME & ATTACHING PARTS		**1-1**
1-1	Main Frame Components	1-2
1-2	Engine Hood & Skirt	1-6
1-3	Fender Assembly	1-8
SECTION 2 – BOOM		**2-1**
2-1	First Boom Section	2-2
2-2	Second Boom Section	2-6
2-3	Third Boom Section	2-10
2-4	Quick Attach	2-14
2-5	Boom Extend Chain	2-16
2-6	Boom Retract Chain	2-18
2-7	Transfer Carriage Assembly	2-20
SECTION 3 – ATTACHMENTS		**3-1**
3-1	Buckets	3-2
3-2	Tilt Carriage	3-4
3-3	Side Tilt Carriage	3-8
3-4	Swing Carriage	3-12
3-5	Sheet Material Handler	3-16
3-6	3’ Truss Boom w/Winch	3-20
3-7	10’ Truss Boom w/Winch	3-22
3-8	12’ Truss Boom w/Winch	3-24
3-9	10’ Truss Boom	3-26
3-10	12’ & 15’ Truss Boom	3-28
3-11	50” Single Fork Positioning Carriage Assembly	3-30
3-12	50” Dual Fork Positioning Carriage Assembly	3-32
3-13	Fork Mounted Lifting Hook	3-34
3-14	Forks	3-36
3-15	Fork Mounted Platform	3-38
3-16	Concrete Bucket	3-42
3-17	Sweeper Assembly	3-44
3-18	Grapple Bucket	3-46
3-19	Fork Pin Lock Installation	3-48
SECTION 4 – ENGINE & ATTACHING PARTS		**4-1**
4-1	Engine Mounting	4-2
4-2	Fuel System	4-6
4-3	Radiator & Oil Cooler Mounting	4-10
4-4	Air Cleaner Assembly	4-14

TABLE OF CONTENTS

FIGURE NO.	TITLE	PAGE NO.
4-5	Exhaust System	4-18
SECTION 5 – DRIVE TRAIN		**5-1**
5-1	Drive Train Components	5-2
5-2	Front Axle	5-4
5-3	Front Axle - Input	5-6
5-4	Front Axle - Limited Slip Differential	5-18
5-5	Front Axle - Axle Casing	5-22
5-6	Front Axle - M-Disc Brake	5-26
5-7	Front Axle - Brake	5-32
5-8	Front Axle - Joint Housing	5-36
5-9	Front Axle - Planetary Drive	5-44
5-10	Rear Axle	5-50
5-11	Rear Axle - Input	5-52
5-12	Rear Axle - Differential	5-58
5-13	Rear Axle - Axle Casing	5-62
5-14	Rear Axle - M-Disc Brake	5-66
5-15	Rear Axle - Brake	5-72
5-16	Rear Axle - Joint Housing	5-74
5-17	Rear Axle - Planetary Drive	5-80
5-18	ZF Transmission	5-84
5-19	ZF Transmission - Engine Connection & Input Shafts	5-86
5-20	ZF Transmission - Gearbox Housing & Coupling Location	5-88
5-21	ZF Transmission - Coupling Group 1	5-90
5-22	ZF Transmission - Coupling Group 2	5-94
5-23	ZF Transmission - Coupling Group 3	5-98
5-24	ZF Transmission - Coupling Group 4	5-102
5-25	ZF Transmission - Reversing Gear Group CV	5-106
5-26	ZF Transmission - Reversing Gear Group CR	5-110
5-27	ZF Transmission - Oil Pump	5-114
5-28	ZF Transmission - Control Unit	5-116
5-29	ZF Transmission - Gearshift System	5-118
5-30	ZF Transmission - Transfer Box	5-120
5-31	Drive Shafts	5-122
5-32	Tire & Rims	5-124
SECTION 6 – CAB		**6-1**
6-1	Cab Assembly	6-2
6-2	Soft Cab Enclosure	6-4
6-3	Cab Glass	6-6
6-4	Door Assembly	6-8
6-5	Operator’s Compartment - Inner Panels	6-10
6-6	Operator’s Seat	6-12

TABLE OF CONTENTS

FIGURE NO.	TITLE	PAGE NO.
6-7	Rear Window	6-16
6-8	Front Windshield Wiper Assembly	6-20
6-9	Skylight Wiper Assembly	6-22
6-10	Windshield Guard	6-24
6-11	Mirrors	6-26
6-12	Heater System	6-28
6-13	Air Conditioning System	6-30
6-14	Ventilation Hoses & Vents	6-32
SECTION 7 – CONTROLS		**7-1**
7-1	Service Brake & Pedal Assembly	7-2
7-2	Throttle Group Assembly	7-4
7-3	Steering Column	7-12
7-4	Frame Sway Control Valve Assembly	7-14
7-5	Joystick Control Valve Assembly	7-16
7-6	Joystick Control Valve Assembly, (Single)	7-18
SECTION 8 – HYDRAULIC CIRCUITS		**8-1**
8-1	Pump, Suction & Return	8-2
8-2	Service & Parking Brake	8-10
8-3	Extend/Retract & Lift/Lower	8-14
8-4	Attachment Tilt & Auxiliary	8-22
8-5	Frame Sway/Stabil-Trak	8-34
8-6	Slave Cylinder	8-38
8-7	Transfer Carriage	8-42
8-8	Steering Cylinder	8-44
8-9	Front Joystick	8-48
8-10	Rear Joystick	8-50
8-11	Single Joystick	8-54
8-12	Transmission Oil Cooler Assembly	8-56
8-13	Oil Cooler	8-58
SECTION 9 – HYDRAULIC COMPONENTS		**9-1**
9-1	Extend/Retract Cylinder	9-2
9-2	Lift/Lower Cylinder	9-10
9-3	Attachment Tilt Cylinder	9-16
9-4	Frame Sway Cylinder	9-20
9-5	Stabil-Trak Cylinder	9-26
9-6	Slave Cylinder	9-32
9-7	Transfer Cylinder	9-36
9-8	Gear Pump	9-38

TABLE OF CONTENTS

FIGURE NO.	TITLE	PAGE NO.
9-9	Main Control Valve	9-42
9-10	Pilot Select Valve Assembly, (Dual Joystick)	9-48
9-11	Pilot Select Valve Assembly, (Single Joystick)	9-50
9-12	Accumulator Charge Valve Assembly	9-52
9-13	Stabil-Trak Cylinder Valves	9-56
9-14	Auxiliary Dump Valve Assemblies	9-58
9-15	Valve Tray Assembly, (Dual Joystick)	9-60
9-16	Valve Tray Assembly, (Single Joystick)	9-66
9-17	Hydraulic Reservoir Assembly	9-70
9-18	Accumulators Assembly	9-72
9-19	Diagnostic Pressure Taps	9-74
9-20	Side Tilt Carriage Cylinder	9-76
9-21	72” 90 Degree Swing Carriage Cylinder	9-78
9-22	Grapple Bucket Cylinder	9-80
SECTION 10 – ELECTRICAL		**10-1**
10-1	Battery & Vehicle Ground Cables	10-2
10-2	Power Components	10-6
10-3	Open Cab Electrical Components	10-14
10-4	Closed Cab Electrical Components	10-20
10-5	Fuses, Relays & Flasher Box	10-22
10-6	Sensor Components	10-30
10-7	Control Components	10-32
10-8	Transmission Components	10-34
SECTION 11 – DECALS		**11-1**
11-1	Decals	11-2
SECTION 12 – OPTIONS		**12-1**
12-1	Roadlight Installation	12-2
12-2	Worklight Installation	12-8
12-3	Beacon & Strobe Light	12-12
12-4	Swing Carriage Cylinder Assembly	12-14
12-5	48”, 50”, 60” & 72” Side Tilt Carriage Cylinder	12-18
12-6	Cold Start Option	12-20
SECTION 13 – RECOMMENDED SPARE PARTS		**13-1**
SECTION 14 – PART NUMBER INDEX		**14-1**

SERVICE KITS

Section	Page No.	Part No.	Description
4	4-3	8024038	250 Hour Filter Kit, (644E Tier I)
4	4-3	8024043	250 Hour Filter Kit, (944E)
4	4-3	2915034	250 Hour Filter Kit, (644E Tier II)
4	4-4	8024037	1000 Hour Filter Kit, (644E)
4	4-4	8024044	1000 Hour Filter Kit, (944E)
4	4-4	2915035	1000 Hour Filter Kit, (644E Tier II)
4	4-21	1001100045	Exhaust Tailpipe Kit
5	5-123	8880218-OM	Strap Kit
8	8-16	8024045	STC Hose Connection Kit
9	9-3	8036475	Extend/Retract Cylinder Seal Kit, (644E)
9	9-7	8036328	Extend/Retract Cylinder Seal Kit, **(944E S/N 18554 thru 0160005595)**
9	9-9	70020310	Extend/Retract Cylinder Seal Kit, **(944E S/N 0160005613 & After)**
9	9-11	8036474	Lift/Lower Cylinder Seal Kit, (644E)
9	9-13	8036644	Lift/Lower Cylinder Seal Kit, (944E)
9	9-17	8035326	Attachment Tilt Cylinder Seal Kit, (644E)
9	9-19	8036547	Attachment Tilt Cylinder Seal Kit, (944E)
9	9-21	8036477	Frame Sway Cylinder Seal Kit, (644E)
9	9-23	8036543	Frame Sway Cylinder Seal Kit, (944E), **(S/N 17569 thru 0160004771)**
9	9-25	8036477	Frame Sway Cylinder Seal Kit, (944E), **(S/N 0160004794 & After)**
9	9-27	8036477	Stabil-Trak Cylinder Seal Kit, (644E)
9	9-29	8036550	Stabil-Trak Cylinder Seal Kit, (944E), **(S/N 17569 thru 0160004849)**
9	9-31	8036477	Stabil-Trak Cylinder Seal Kit, (944E), **(S/N 0160004927 & After)**
9	9-33	8035332	Slave Cylinder Seal Kit, (644E)
9	9-35	8036551	Slave Cylinder Seal Kit, (944E)
9	9-37	8036476	Transfer Cylinder Seal Kit
9	9-39	8036481	Gear Pump Seal Kit, (644E)

SERVICE KITS

Section	Page No.	Part No.	Description
9	9-41	8036481	Gear Pump Seal Kit, (944E)
9	9-44	8036515	MCV Spool Cap Kit
9	9-44	8036503	MCV Section Assemblies Seal Kit
9	9-44	2915007	Main Control Valve Replacement Kit, **(644E S/N 17569 thru 0160003108) (944E S/N 17569 thru 0160003140)**
9	9-71	1001092281	Hydraulic Tank Assembly Kit
9	9-73	10268992	Accumulator Charge Kit
10	10-31	2915053	Pressure Switch Kit, **(644E S/N 17569 thru 20123 & 0160002514 thru 0160012687), (944E S/N 17569 thru 20123 & 016002514 thru 0160012684)**
12	12-15	8035830	Swing Carriage Cylinder Seal Kit, (Rosenboom)
12	12-17	8036783	Swing Carriage Cylinder Seal Kit, (Energy)
12	12-19	8035831	Side Tilt Cylinder Seal Kit
12	12-21	8270422	Grid Heater Kit

SECTION 1
FRAME & ATTACHING PARTS

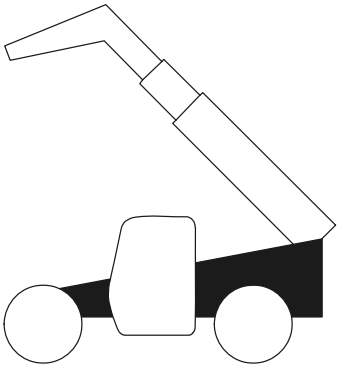

Figure 1-1 Main Frame Components

644E

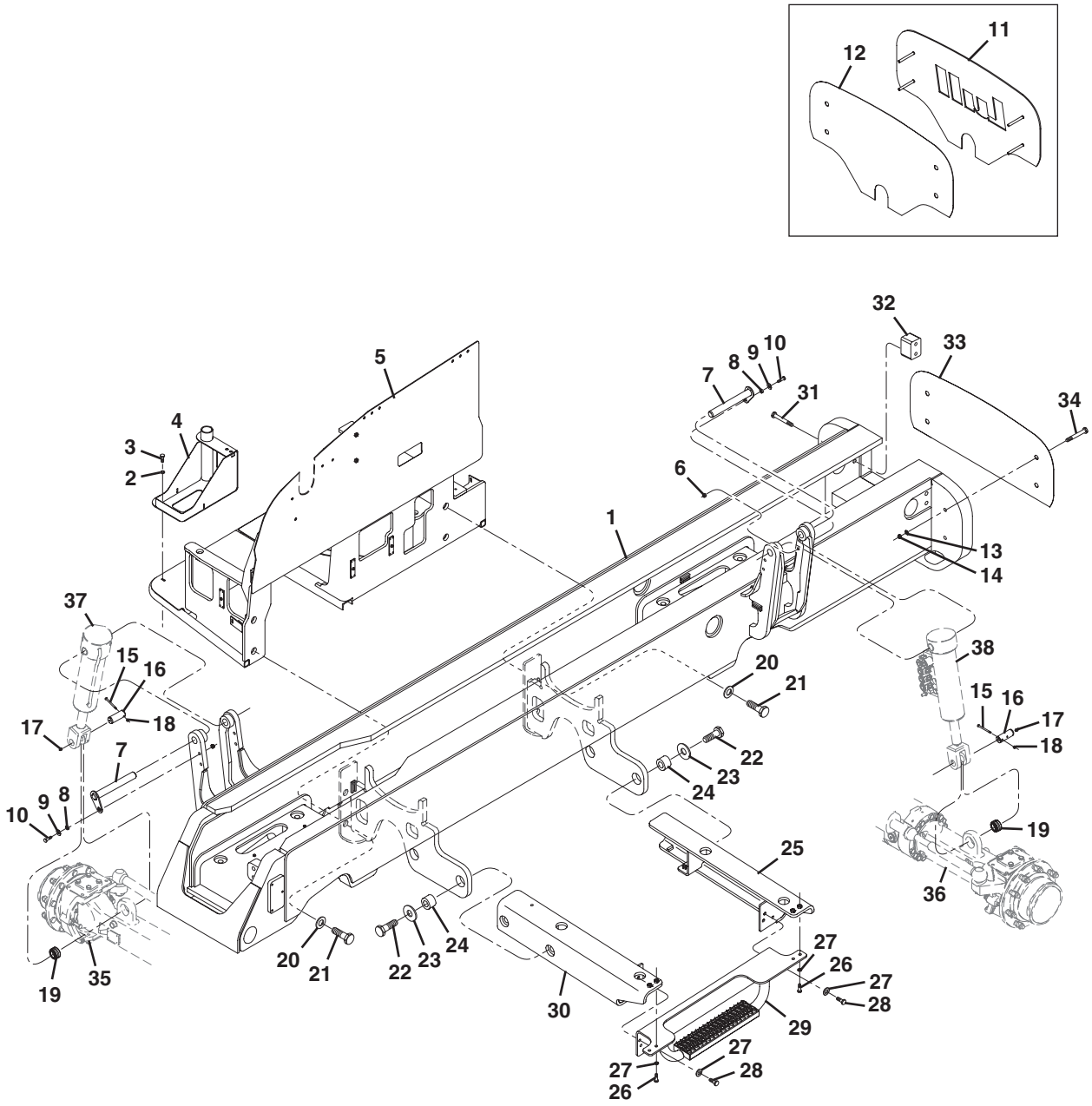

Figure 1-1 Main Frame Components

Item	Part Number	Qty.	Description	Rev.
1	Call Factory	1	MAIN FRAME	
2	8307221	3	PLAIN WASHER, M10	
3	8303755	3	HEX HD CAPSCREW, M10X1.5X30mm, PC8.8	
4	7300534	1	LOWER BATTERY SUPPORT	
5	7300260	1	ENGINE MOUNT FRAME	
6	8310625	2	HEX LOCKNUT, M12-1.75	
7	7301149	2	CYLINDER MOUNTING PIN	
8	7139886	2	PIN RETAINER SPACER	
9	8310657	2	PLAIN WASHER, M12	
10	8310656	2	HEX HD CAPSCREW, M12-1.75X60mm, PC8.8	
11		1	LULL LOGO PLATE, (no longer available, order items 33 & 34 for replacement)	
12		1	LOGO BACKUP PLATE, (no longer available, order items 33 & 34 for replacement)	
13	8307220	4	FLAT WASHER, M12	
14	8310625	4	HEX LOCKNUT, M12-1.75	
15	8310424	2	HEX HD CAPSCREW, M8-1.25X90mm, PC8.8	
16	7137142	2	CYLINDER PIN	
17	8520001	2	LUBE FITTING, 1/8	
18	8305654	2	HEX LOCKNUT, M8-1.25	
19	8050001	2	SELF ALIGN BEARING, 1.4995X1.307	
20	8310539	4	PLAIN WASHER, 1.25-1.375-2.5	
21	0683020	4	HEX HD CAPSCREW, 1.25-7-2.5, GR8	
22	8310285	4	HEX HD CAPSCREW, 1.25-7-4, GR8	
23	7300573	4	CAB SUPPORT WASHER	
24	7300439	4	CAB MOUNT SHEER PIN	
25	7300327	1	CAB REAR SUPPORT	
26	8310164	4	HEX HD CAPSCREW, M12-1.75X40mm, PC8.8	
27	8310308	8	PLAIN WASHER, .5	
28	8310652	4	HEX HD CAPSCREW, M12-1.75X40mm, PC10.9	
29	7300793	1	CAB MOUNT STEP	
30	7300326	1	CAB FRONT SUPPORT	
31	8321701	4	HEX HD CAPSCREW, M20-2.5X150mm, PC8.8	
32	7300754	2	TC STOP BLOCK	
33	3575924	1	FRAME COVER PLATE	
34	10704216	4	HEX HD CAPSCREW, M12-1.75X110mm, PC8.8	
35		Ref	FRONT AXLE, (see Figure 5-2 for details)	
36		Ref	REAR AXLE, (see Figure 5-10 for details)	
37		Ref	FRAME SWAY CYLINDER, (see Figure 9-4 for details)	
36		Ref	STABIL-TRAK CYLINDER, (see Figure 9-5 for details)	

Figure 1-1 Main Frame Components

944E

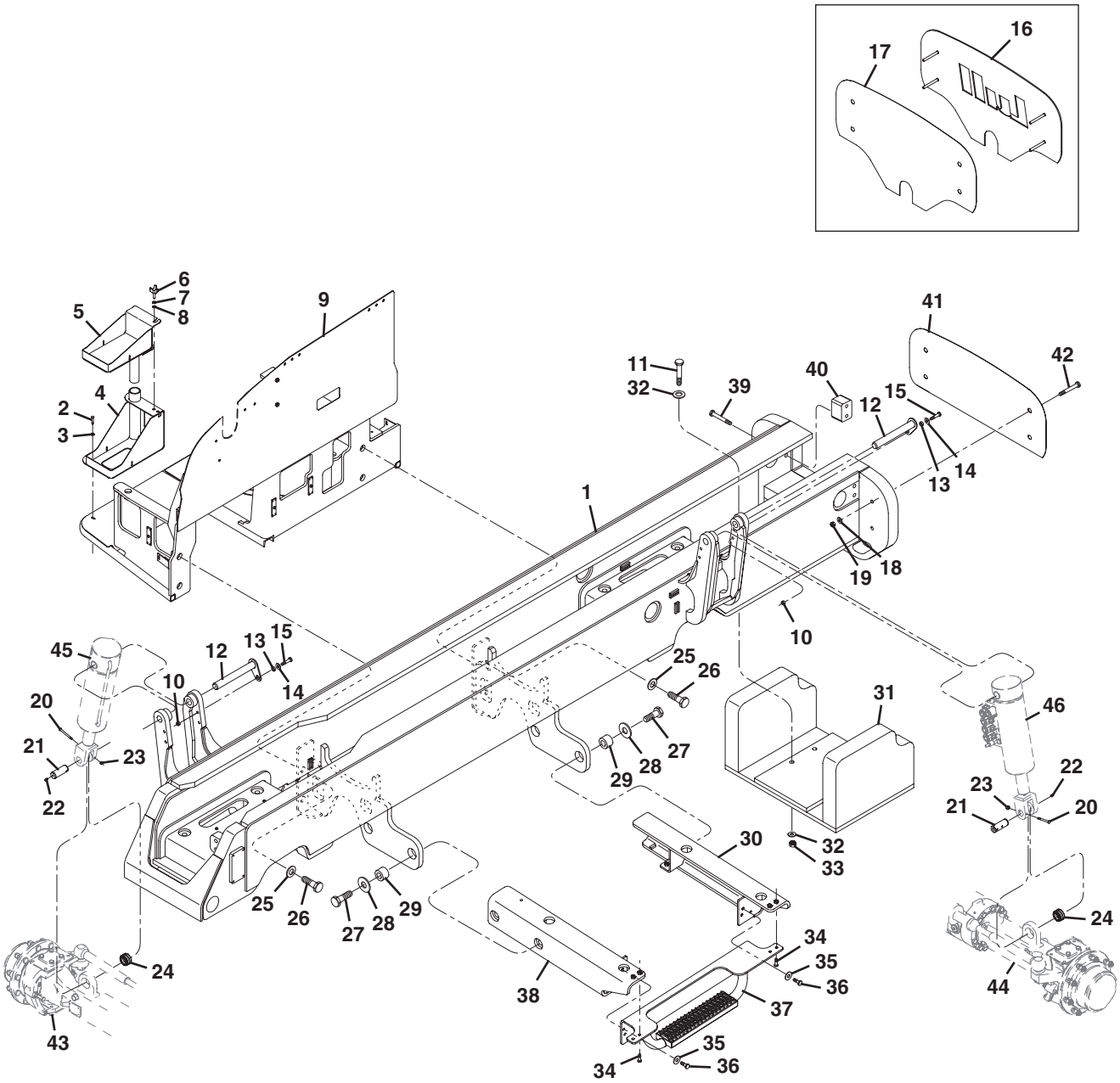

Figure 1-1 Main Frame Components

Item	Part Number	Qty.	Description	Rev.
1	Call Factory	1	MAIN FRAME	
2	8303755	3	HEX HD CAPSCREW, M10X1.5X30mm, PC8.8	
3	8307221	3	PLAIN WASHER, M10	
4	7300534	1	LOWER BATTERY SUPPORT	
5	7300535	1	UPPER BATTERY SUPPORT	
6	8310709	1	CLAMP KNOB STUD, M10-1.5X40mm	
7	8307221	1	PLAIN WASHER, M10	
8	8310070	1	PUSH NUT, 3/8X13/16	
9	7300448	1	ENGINE MOUNT FRAME	
10	8310625	2	HEX LOCKNUT, M12-1.75	
11	8310713	4	HEX HD CAPSCREW, M20-2.5X130mm, PC8.8	
12	7301149	2	CYLINDER MOUNTING PIN	
13	7139886	2	PIN RETAINER SPACER	
14	8310657	2	PLAIN WASHER, M12	
15	8310656	2	HEX HD CAPSCREW, M12-1.75X60mm, PC8.8	
16		1	LULL LOGO PLATE, (no longer available, order items 41 & 42 for replacement)	
17		1	LOGO BACKUP PLATE, (no longer available, order items 41 & 42 for replacement)	
18	8307220	4	FLAT WASHER, M12	
19	8310625	4	HEX LOCKNUT, M12-1.75	
20	8310424	2	HEX HD CAPSCREW, M8-1.25X90mm, PC8.8	
21	7137142	2	CYLINDER PIN	
22	8520001	2	LUBE FITTING, 1/8	
23	8305654	2	HEX LOCKNUT, M8-1.25	
24	8050001	2	SELF ALIGN BEARING, 1.4995X1.307	
25	8310539	4	PLAIN HARDENED WASHER, 1.25-1.375-2.5	
26	0683020	4	HEX HD CAPSCREW, 1.25-7-2.5, GR8	
27	8310285	4	HEX HD CAPSCREW, 1.25-7- 4, GR8	
28	7300573	4	CAB SUPPORT WASHER	
29	7300439	4	CAB MOUNT SHEER PIN	
30	7300327	1	CAB REAR SUPPORT	
31	7301516	1	COUNTERWEIGHT	
32	8310426	8	PLAIN WASHER, M20	
33	8305655	4	HEX LOCKNUT, M20-2.5	
34	8310164	4	HEX HD CAPSCREW, M12-1.75X35mm, PC8.8	
35	8310308	4	PLAIN WASHER, .500	
36	8310652	4	HEX HD CAPSCREW, M12-1.75X40mm, PC8.8	
37	7300793	1	CAB MOUNT STEP	
38	7300326	1	CAB FRONT SUPPORT	
39	8321701	4	HEX HD CAPSCREW, M20-2.50X150mm, PC8.8	
40	7300754	2	TC STOP BLOCK	
41	3575924	1	FRAME COVER PLATE	
42	10704216	4	HEX HD CAPSCREW, M12-1.75X110mm, PC8.8	
43		Ref	FRONT AXLE, (see Figure 5-1 for details)	
44		Ref	REAR AXLE, (see Figure 5-1 for details)	
45		Ref	FRAME SWAY CYLINDER, (see Figure 9-4 for details)	
46		Ref	STABIL-TRAK CYLINDER, (see Figure 9-5 for details)	

Figure 1-2 Engine Hood & Skirt

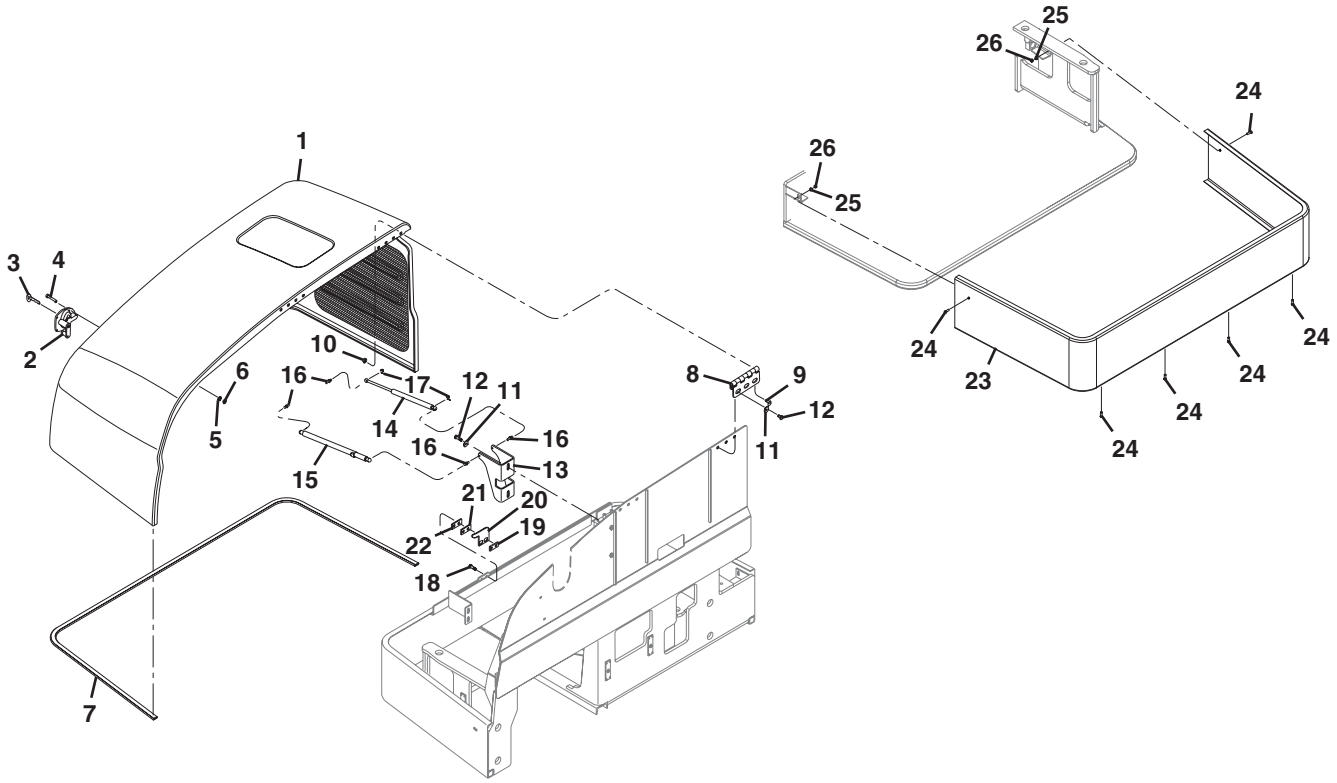

Figure 1-2 Engine Hood & Skirt

Item	Part Number	Qty.	Description	Rev.
1	7300609	1	HOOD ASSY	
2	7300364	1	HOOD LATCH ASSY, (includes item 3)	
3	8342813	1	HOOD LATCH KEY	
4	8310664	4	SOCKET HD CAPSCREW, M4-0.7X25mm, PC12.9	
5	8310491	4	PLAIN WASHER, M4	
6	3290405	4	TORX HEX NUT, M4-0.7	
7	8277172	1	TRIM SEAL	
8	7300630	2	HOOD HINGE	
9	8310614	8	FLANGE SOCKET HEX HD CAPSCREW, M10-1.5X30	
10	8305038	8	HEX NUT, M10-1.5	
11	8310621	8	FEND WASHER, 10M-5/16-18 THD	
12	8303784	8	HEX HD CAPSCREW, M10-1.5X20mm, PC8.8	
13	7300687	1	GAS STRUT BRACKET	
14	8702162	1	GAS STRUT SPRING, 10X22, 550N	
15	8702163	1	LOCKING GAS STRUT SPRING, 10X22, 550N	
16	8340038	4	BALL STUD, 10mm 5/16-18	
17	8702164	2	SPRING CLIP RETAINER	
18	8303777	2	HEX HD CAPSCREW, M10-1.5X35mm, PC8.8	
19	7301312	1	HOOD LATCH NUT PLATE	
20	7301371	1	LATCH CATCH PLATE	
21	7301373	1	LATCH CATCH PLATE, 7 GA SPACER	
22	7301372	1	HOOD LATCH NUT PLATE	
23	7300370	1	ENGINE MOUNT SKIRT	
24	8310693	6	HEX FLANGE SCREW, M8-1.25X25mm, CLASS 8.8 BLK	
25	8307203	2	PLAIN WASHER	
26	8305654	2	HEX LOCKNUT, M8-1.25	

Figure 1-3 Fender Assembly

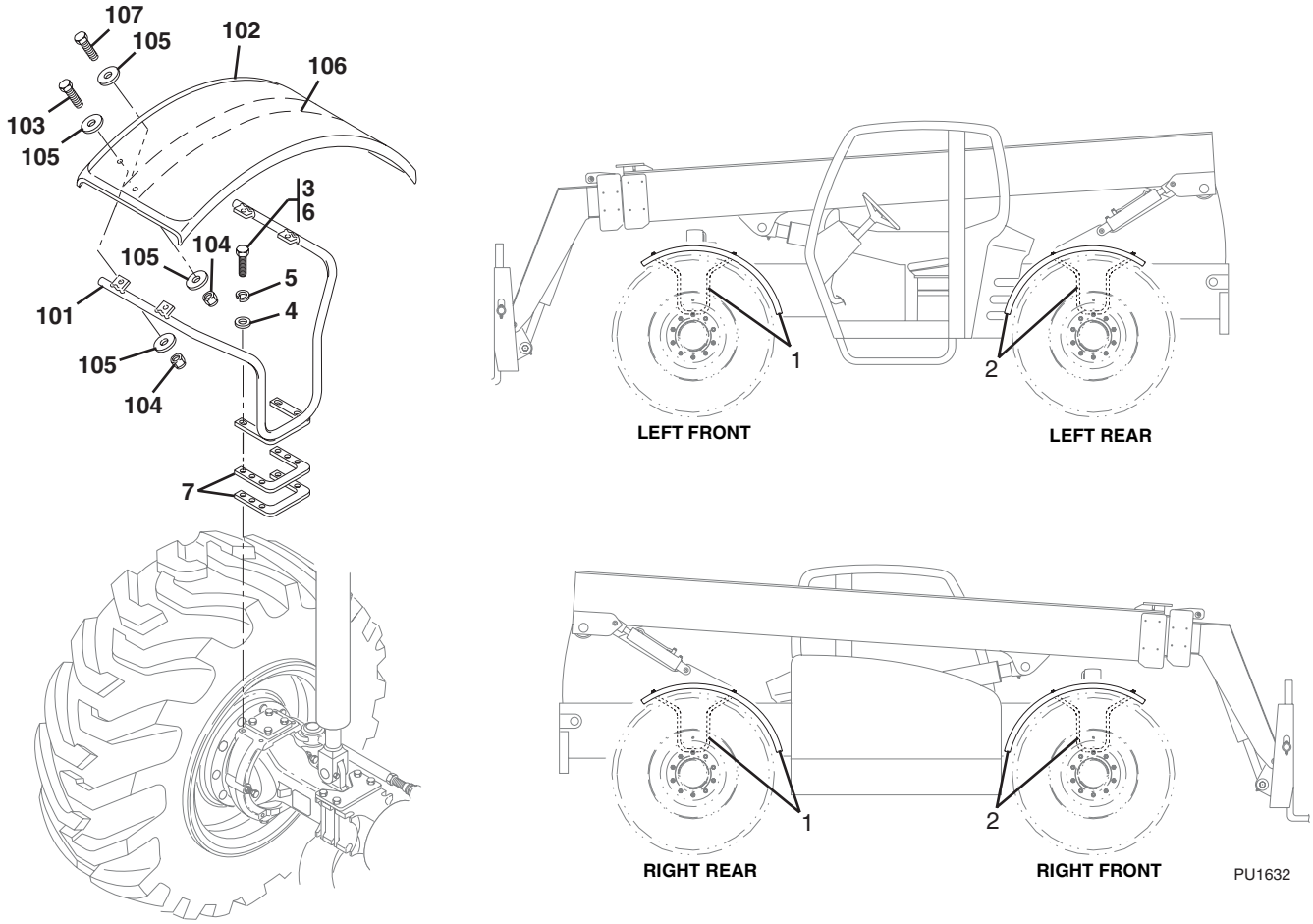

Figure 1-3 Fender Assembly

Item	Part Number	Qty.	Description	Rev.
	7301311	1	FENDER INSTALLATION, (includes items 1 thru 5)	
	1001109604	1	FENDER INSTALLATION, (includes items 1 thru 7), **(944E S/N 0160037902 & After)**	
1		2	LEFT FRONT/RIGHT REAR FENDER ASSY, (includes items 3 thru 6), **(S/N 17569 thru 20123 & 0160002514 thru 0160025339)**	AD
	7150695	2	LEFT FRONT/RIGHT REAR FENDER ASSY, (includes items 3 thru 7), **(S/N 0160025381 & After)**	G
2		2	RIGHT FRONT/LEFT REAR FENDER ASSY, (includes items 3 thru 6), **(S/N 17569 thru 20123 & 0160002514 thru 0160025339)**	AD
	7150696	2	RIGHT FRONT/LEFT REAR FENDER ASSY, (includes items 3 thru 7), **(S/N 0160025381 & After)**	G
3	8310164	16	HEX HD CAPSCREW, M12-1.75X40mm, PC8.8	
	0701221	16	HEX HD CAPSCREW, M12-1.75X65mm, PC8.8, (torque to 43-78 lb-ft), **(944E S/N 0160037902 & After)**	
4	8310308	16	HARDENED WASHER, 1/2	
5	8307025	16	LOCKWASHER, M12	
	4832100	16	SPRING LOCKWASHER, M12, **(944E S/N 0160037902 & After)**	
6	8526007	AR	LOCTITE, #242, (apply to item 3)	
7	1001109573	8	SHIM, **(944E S/N 0160037902 & After)**	
101	7150668	1	FENDER MOUNT, **(S/N 17569 thru 20123 & 0160002514 thru 0160025339)**	
	0903609	1	FENDER MOUNT, **(S/N 0160025381 & After)**	
102	7150706	1	FENDER	
103	8303626	4	HEX HD CAPSCREW, 1/2-13X1-1/2, GR5	
104	8305644	6	HEX LOCKNUT, 1/2-13, **(S/N 17569 thru 20123 & 0160002514 thru 0160025339)**	
	8305644	4	HEX LOCKNUT, 1/2-13, **(S/N 0160025381 & After)**	
105	8307206	12	PLAIN WIDE WASHER, 1/2, **(S/N 17569 thru 20123 & 0160002514 thru 0160025339)**	
	8307206	8	PLAIN WIDE WASHER, 1/2, **(S/N 0160025381 & After)**	
106	6623576	1	FENDER SUPPORT, **(S/N 17569 thru 20123 & 0160002514 thru 0160025339)**	
107	8303625	2	HEX HD CAPSCREW, 1-1/2-13X1-1/2, GR5, **(S/N 17569 thru 20123 & 0160002514 thru 0160025339)**	
	7147400	1	FENDER FIELD KIT, (four wheel installation)	
			NOTE: ITEM NUMBERS NOT LISTED ARE NOT USED ON THIS FIGURE	

This Page Intentionally Left Blank

SECTION 2
BOOM

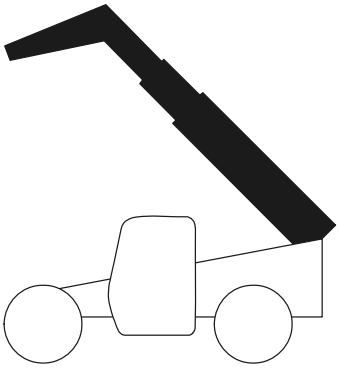

Figure 2-1 First Boom Section

644E

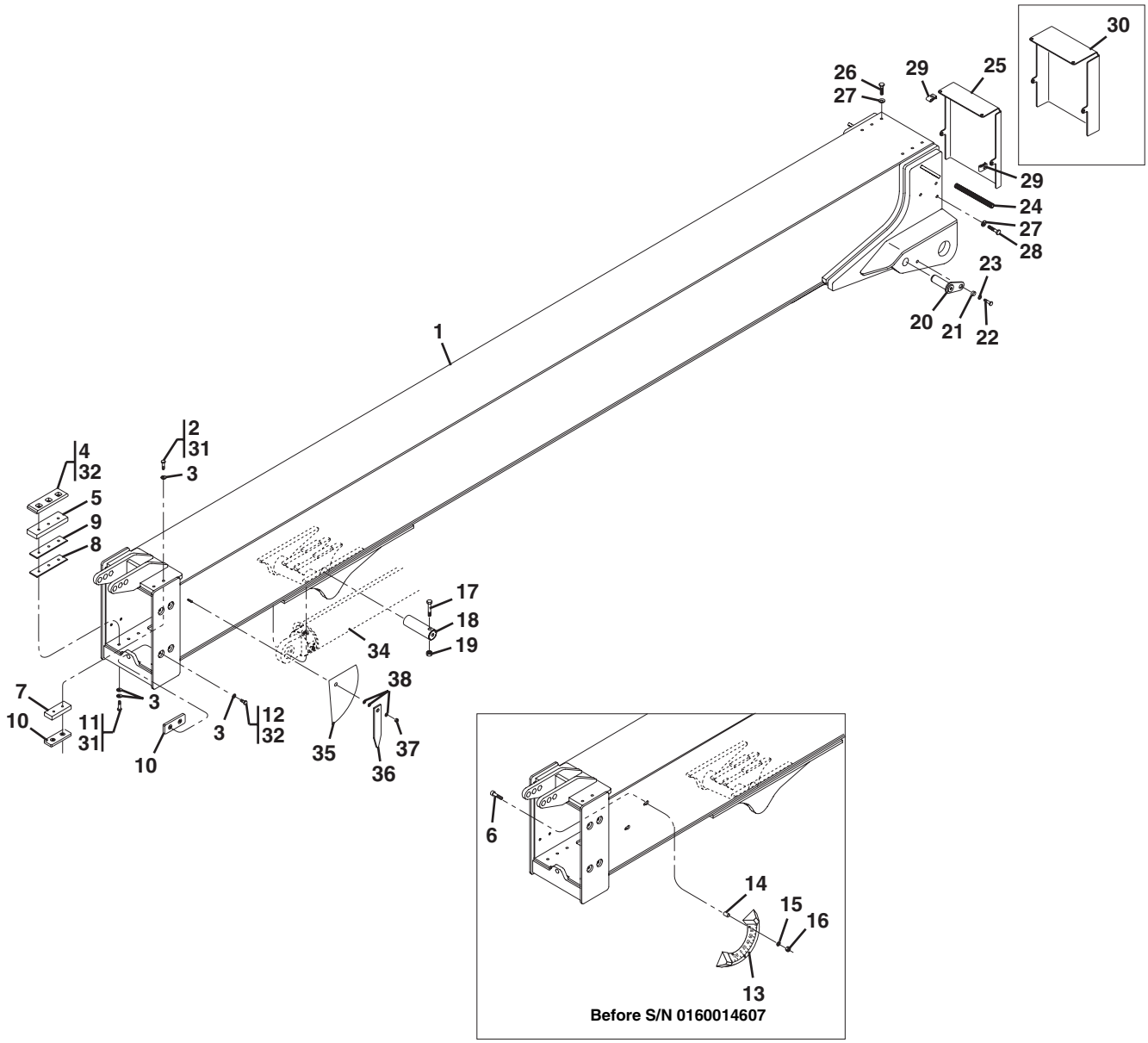

PU1642

Figure 2-1 First Boom Section

Item	Part Number	Qty.	Description	Rev.
1	7300950	1	FIRST BOOM SECTION	
2	8310125	4	HEX HD CAPSCREW, M10-1.5X55mm, PC8.8	
3	8307221	24	PLAIN WASHER, M10	
4	7300034	2	WEAR PAD, (includes inserts)	
5	7300064	2	WEAR PAD SPACER	
6	8310630	2	CARRIAGE BOLT, M6-1.0X40mm, PC8.8, **(S/N 17569 thru 20123 & 0160002514 thru 160014607)**	
7	7300516	2	WEAR PAD SPACER	
8	7126172	2	SHIM, WEAR PAD 3.42mm, (10 GA)	
9	7126182	2	SHIM, WEAR PAD 1.90mm, (14 GA)	
10	7300032	6	WEAR PAD, (includes inserts)	
11	8310748	6	HEX HD CAPSCREW, M10-1.5X50mm, PC8.8	
12	8303551	8	HEX HD CAPSCREW, M10-1.5X16mm, PC8.8	
13	10238252	1	BOOM ANGLE INDICATOR, **(S/N 17569 thru 20123 & 0160002514 thru 160014607)**	
14	8310629	2	SPACER, **(S/N 17569 thru 20123 & 0160002514 thru 160014607)**	
15	8307219	2	PLAIN WASHER, M6, **(S/N 17569 thru 20123 & 0160002514 thru 160014607)**	
16	8305652	2	HEX LOCKNUT, M6-1.0, **(S/N 17569 thru 20123 & 0160002514 thru 160014607)**	
17	8310627	1	HEX HD CAPSCREW, M20-2.5X140mm, PC8.8	
18	7139325	1	LIFT/LOWER CYLINDER PIN	
19	8305655	1	HEX LOCKNUT, M20-2.5	
20	7300723	2	SLAVE CYLINDER PIN, (rod end)	
21	7139886	2	PIN RETENTION SPACER	
22	8310164	2	HEX HD CAPSCREW, M12-1.75X40mm, PC8.8	
23	8310657	2	PLAIN WASHER, M12	
24	6620731	1	MOULDING	
25	7301175	1	REAR BOOM COVER, **(S/N 17569 thru 20118 & S/N 0160002519 thru 0160005949, excluding 0160004236, 0160004237 & 0160005773)**	
26	8303611	2	HEX HD CAPSCREW, M8-1.25X30mm, PC8.8	
27	8307222	4	FLAT WASHER, M8	
28	8310030	2	HEX HD CAPSCREW, M8-1.25X80mm, PC8.8	
29	8310686	4	RETAINER NUT, M8-1.25	
30	7302064	1	REAR BOOM COVER, **(S/N 0160006093 & After, including 0160004236, 0160004237 & 0160005773)**	
31	8526007	AR	LOCTITE, #242, (apply to items 2, 11 & 12)	
32	8522050	AR	LUBRIPLATE GREASE, #5555, (apply to item 4)	
33	8522051	AR	RUST INHIBITOR, HEAVY DUTY, (not shown)	
34		Ref	BOOM EXTEND/RETRACT CYLINDER, (see Figure 9-1 for details)	
35	4105262	1	BOOM ANGLE INDICATOR DECAL, **(S/N 0160014607 & After)**	
36	7075611	1	BOOM ANGLE INDICATOR POINTER, **(S/N 0160014607 & After)**	
37	8305647	1	HEX LOCK NUT, 7/16-14, **(S/N 0160014607 & After)**	
38	8307113	3	PLAIN WASHER, 7/16, **(S/N 0160014607 & After)**	

Figure 2-1 First Boom Section

944E

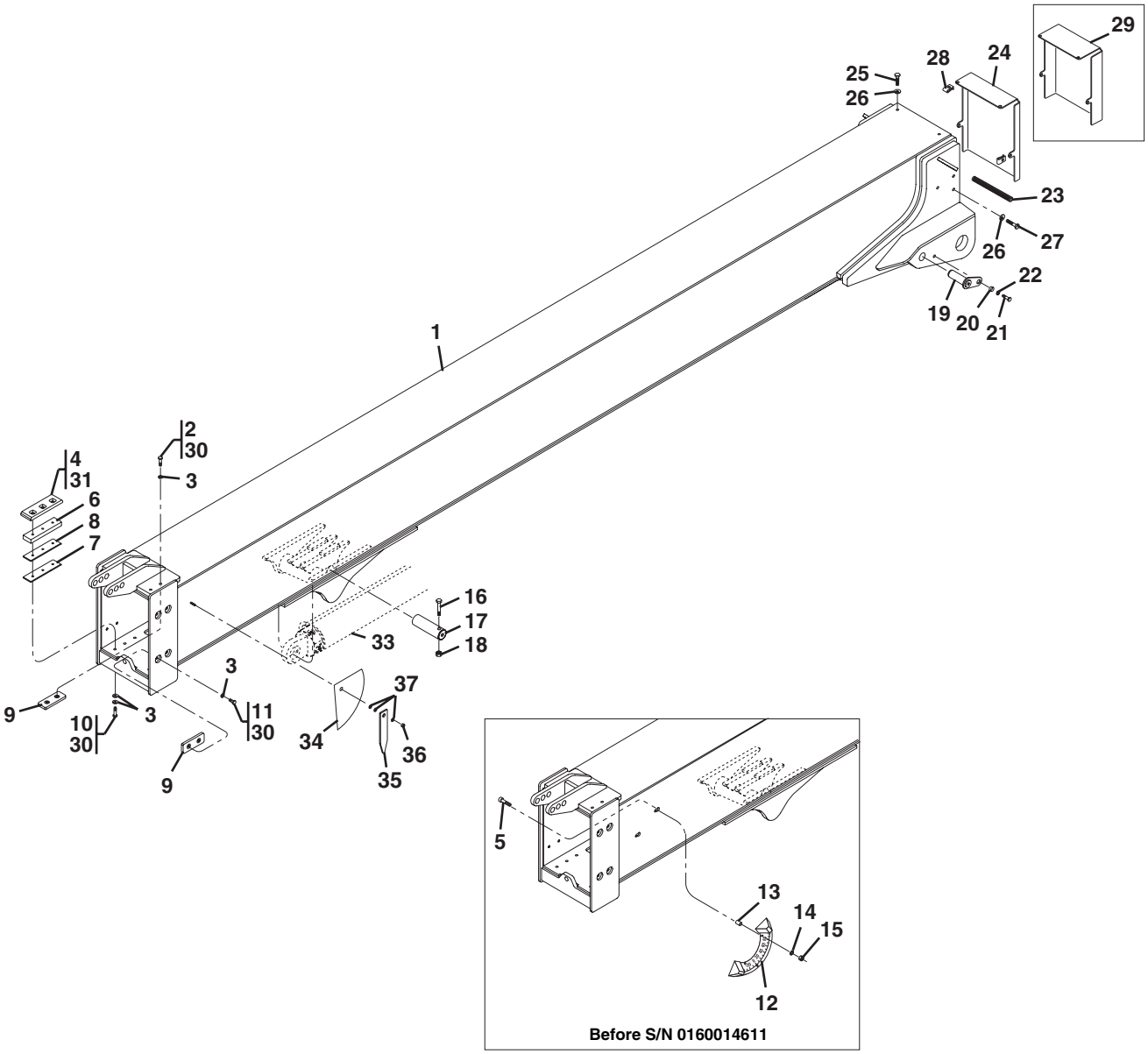

PU1652

Figure 2-1 First Boom Section

Item	Part Number	Qty.	Description	Rev.
1	7300966	1	FIRST BOOM SECTION	
2	8303097	4	HEX HD CAPSCREW, M10-1.5X65mm, PC8.8	
3	8307221	24	PLAIN WASHER, M10	
4	7300034	2	WEAR PAD, (includes inserts)	
5	8310630	2	CARRIAGE BOLT, M6-1.0X40mm, PC8.8, **(S/N 17569 thru 20123 & 0160002514 thru 160014607)**	
6	7300064	2	WEAR PAD	
7	7126172	2	SHIM, WEAR PAD, 3.42mm, (10 GA)	
8	7126182	2	SHIM, WEAR PAD, 1.90mm, (14 GA)	
9	7300032	6	WEAR PAD, (includes inserts)	
10	8310748	6	HEX HD CAPSCREW, M10-1.5X50mm, PC8.8	
11	8303551	8	HEX HD CAPSCREW, M10-1.5X16mm, PC8.8	
12	10238252	1	BOOM ANGLE INDICATOR, **(S/N 17569 thru 20123 & 0160002514 thru 160014607)**	
13	8310629	2	SPACER, **(S/N 17569 thru 20123 & 0160002514 thru 160014607)**	
14	8307219	2	PLAIN WASHER, M6, **(S/N 17569 thru 20123 & 0160002514 thru 160014607)**	
15	8305652	2	HEX LOCKNUT, M6-1.0, **(S/N 17569 thru 20123 & 0160002514 thru 160014607)**	
16	8310627	1	HEX HD CAPSCREW, M20-2.5X140mm, PC8.8	
17	7139325	1	LIFT/LOWER CYLINDER PIN	
18	8305655	1	HEX LOCKNUT, M20-2.5	
19	7300723	2	SLAVE CYLINDER PIN, (rod end)	
20	7139886	2	PIN RETENTION SPACER	
21	8310164	2	HEX HD CAPSCREW, M12-1.75X40mm, PC8.8	
22	8310657	2	PLAIN WASHER, M12	
23	6620731	1	MOULDING	
24	7301183	1	REAR BOOM COVER, **(S/N 18554 thru 20123 & S/N 0160002514 thru 0160006008 including 0160006152 & excluding 0160006007)**	
25	8303611	2	HEX HD CAPSCREW, M8-1.25X30mm, PC8.8	
26	8307222	4	FLAT WASHER, M8	
27	8310293	2	HEX HD CAPSCREW, M8-1.25X50mm, PC8.8	
28	8310686	4	RETAINER NUT, M8-125	
29	7302065	1	REAR BOOM COVER, **(S/N 0160006007 & After, excluding 0160006008 & 0160006152)**	
30	8526007	AR	LOCTITE, #242, (apply to items 2, 10 & 11)	
31	8522050	AR	LUBRIPLATE GREASE, #5555, (apply to item 4)	
32	8522051	AR	RUST INHIBITOR, HEAVY DUTY, (not shown)	
33		Ref	BOOM EXTEND/RETRACT CYLINDER, (see Figure 9-1 for details)	
34	4105262	1	BOOM ANGLE INDICATOR DECAL, **(S/N 0160014607 & After)**	
35	7075611	1	BOOM ANGLE INDICATOR POINTER, **(S/N 0160014607 & After)**	
36	8305647	1	HEX LOCK NUT, 7/16-14, **(S/N 0160014607 & After)**	
37	8307113	3	PLAIN WASHER, 7/16, **(S/N 0160014607 & After)**	

Figure 2-2 Second Boom Section

644E

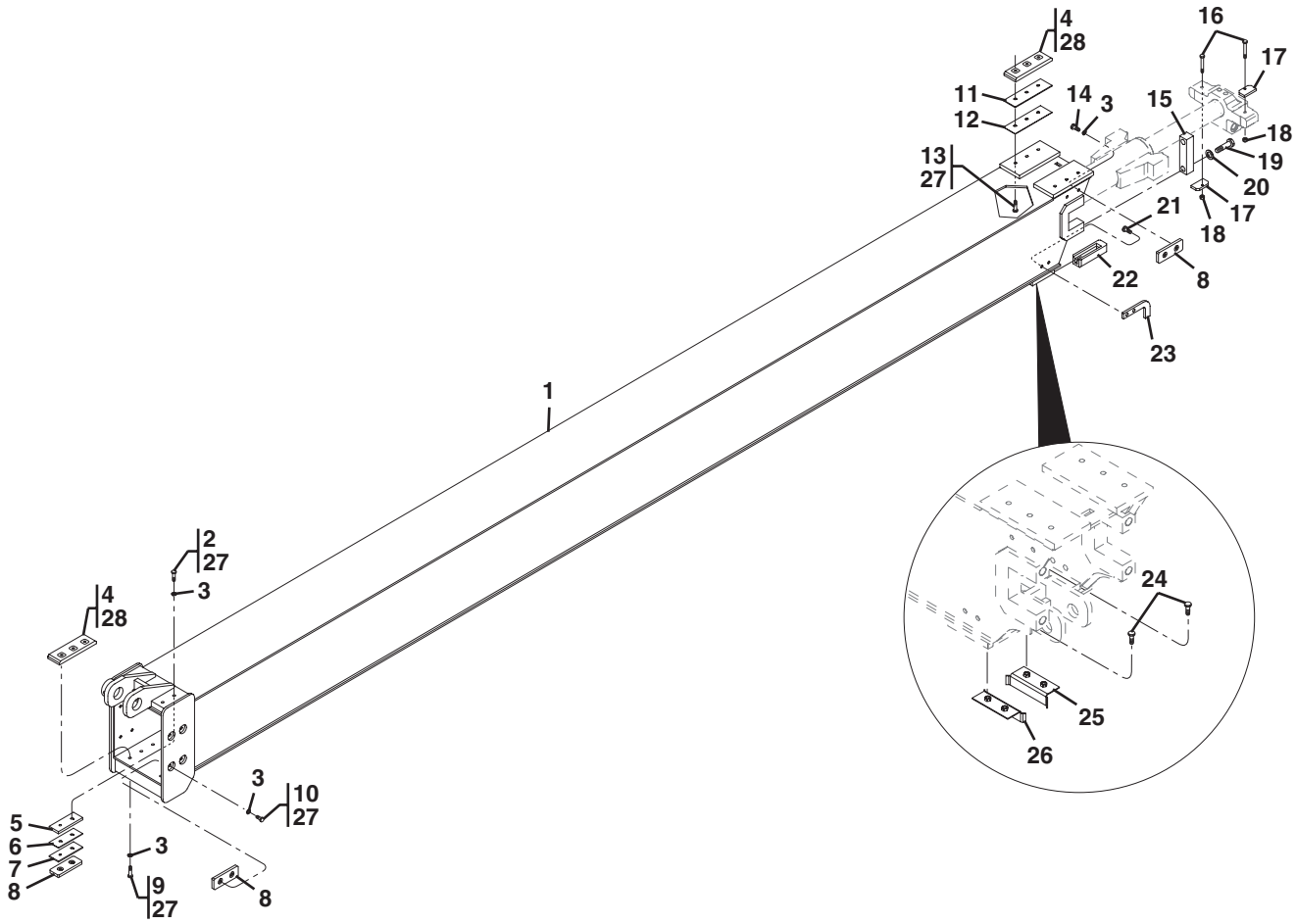

PU1661

Figure 2-2 Second Boom Section

Item	Part Number	Qty.	Description	Rev.
1	7300098	1	SECOND BOOM SECTION	
2	8303097	4	HEX HD CAPSCREW, M10-1.5X65mm, PC8.8	
3	8307221	22	PLAIN WASHER, M10	
4	7300034	4	WEAR PAD, (includes inserts)	
5	7300516	2	SPACER	
6	7300517	AR	SHIM, 3.42mm, (10 GA)	
7	7300518	AR	SHIM, 1.90mm, (14 GA)	
8	7300032	8	WEAR PAD, (includes inserts)	
9	8303784	6	HEX HD CAPSCREW, M10-1.5X20mm, PC8.8	
10	8303551	8	HEX HD CAPSCREW, M10-1.5X16mm, PC8.8	
11	7126172	AR	SHIM, 3.42mm, (10 GA)	
12	7126182	AR	SHIM, 1.90mm, (14 GA)	
13	8310600	6	HEX HD CAPSCREW, M10-1.5X20mm, PC12.9	
14	8303755	4	HEX HD CAPSCREW, M10-1.5X30mm, PC8.8	
15	4220238	2	EXTEND CYLINDER ANCHOR PLATE	
16	8310705	2	HEX HD CAPSCREW, M10-1.5X75mm, PC8.8	
17	4220238	2	EXTEND CYLINDER ROD MOUNT PLATE	
18	8305630	2	HEX LOCKNUT, M10-1.5	
19	8310598	4	HEX HD CAPSCREW, M20-2.5X80mm, PC10.9	
20	8310620	4	PLAIN WASHER, M20	
21	8303798	4	HEX HD CAPSCREW, M10-1.5X25mm, PC8.8	
22	7120182	2	WEAR PAD CHANNEL	
23	7300579	2	WEAR PAD STOP PLATE	
24	8303783	4	HEX HD CAPSCREW, M8-1.25X25mm, PC8.8	
25	7301533	1	RH HOSE GUIDE	
26	7301535	1	LH HOSE GUIDE	
27	8526007	AR	LOCTITE, #242, (apply to items 2, 9, 10, 13, 14 & 21)	
28	8522050	AR	LUBRIPLATE GREASE, #5555, (apply to item 4)	
29	8522051	AR	RUST INHIBITOR, HEAVY DUTY, (not shown)	

Figure 2-2 Second Boom Section

944E

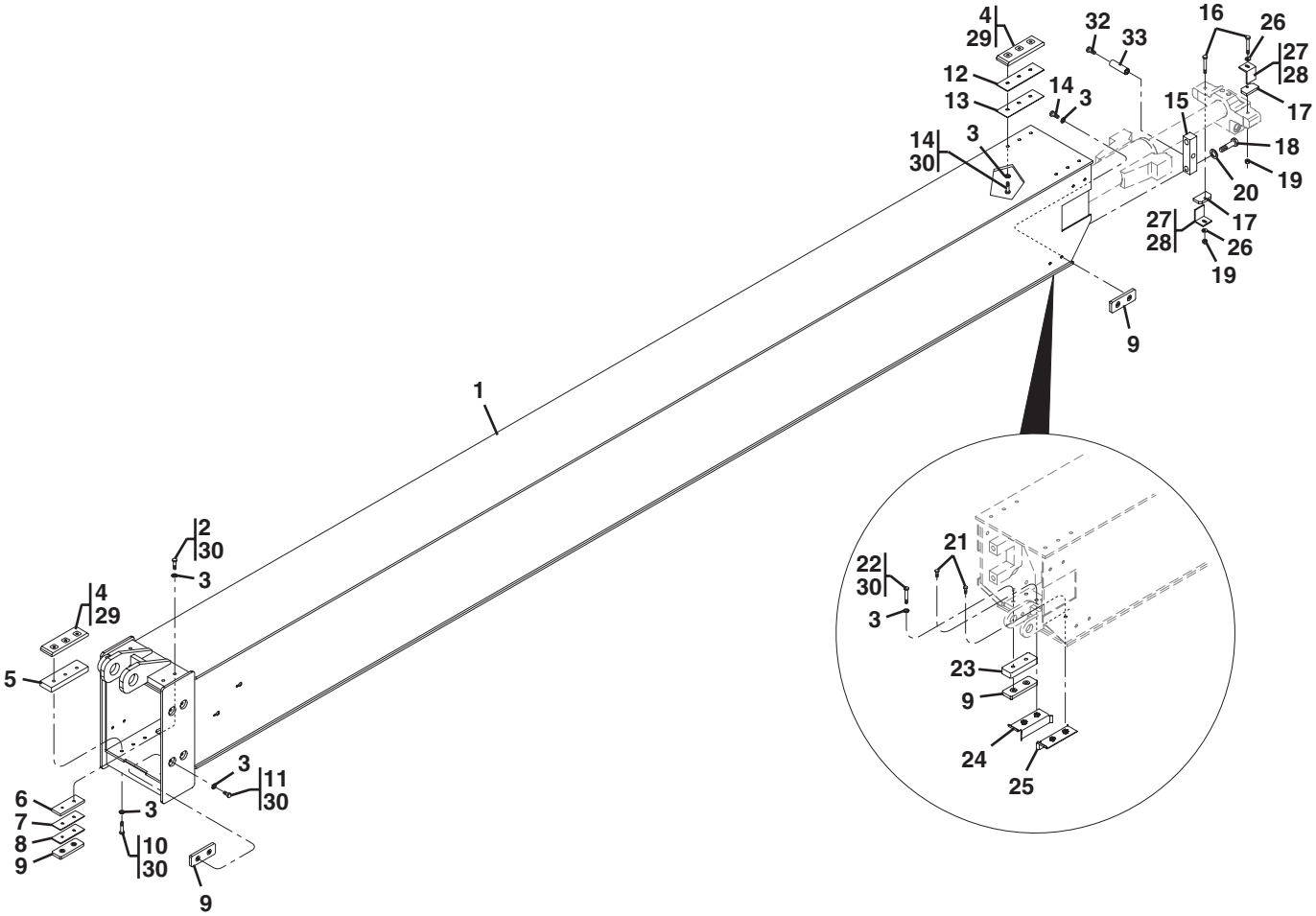

PU1670

Figure 2-2 Second Boom Section

Item	Part Number	Qty.	Description	Rev.
1	7300805	1	SECOND BOOM SECTION	
2	8303097	4	HEX HD CAPSCREW, M10-1.5X65mm, PC8.8	
3	8307221	36	PLAIN WASHER, M10	
4	7300034	4	WEAR PAD, (includes inserts)	
5	7300064	2	SPACER	
6	7300516	2	SPACER	
7	7300517	AR	SHIM, 3.42mm, (10 GA)	
8	7300518	AR	SHIM, 1.90mm, (14 GA)	
9	7300032	12	WEAR PAD, (includes inserts)	
10	8303769	6	HEX HD CAPSCREW, M10-1.5X45mm, PC8.8	
11	8303551	8	HEX HD CAPSCREW, M10-1.5X16mm, PC8.8	
12	7126172	AR	SHIM, 3.42mm, (10 GA)	
13	7126182	AR	SHIM, 1.90mm, (14 GA)	
14	8303798	14	HEX HD CAPSCREW, M10-1.5X25mm, PC8.8	
15	4220238	2	EXTEND CYLINDER ANCHOR PLATE	
16	8310354	2	HEX HD CAPSCREW, M10-1.5X80mm, PC8.8	
17	7300522	2	EXTEND CYLINDER ROD MOUNT	
18	8310598	4	HEX HD CAPSCREW, M20-2.5X80mm, PC10.9	
19	8305630	2	HEX LOCKNUT, M10X1.5	
20	8310620	4	PLAIN WASHER, M20	
21	8303783	4	HEX HD CAPSCREW, M8-1.25X25mm, PC8.8	
22	8303753	4	HEX HD CAPSCREW, M10-1.5X60mm, PC8.8	
23	7300973	2	SPACER	
24	7301535	1	LH HOSE GUIDE	
25	7301533	1	RH HOSE GUIDE	
26	8307220	2	PLAIN WASHER, M12	
27	7301756	AR	EXTEND CYLINDER, THICK SHIM	
28	7301757	AR	EXTEND CYLINDER, THIN SHIM	
29	8522050	AR	LUBRIPLATE GREASE #5555, (apply to item 4)	
30	8526007	AR	LOCTITE, #242, (apply to items 2, 10, 11, 14, & 22)	
31	8522007	AR	RUST INHIBITOR, HEAVY DUTY, (not shown)	
32	8310514	2	SOCKET HD SHOULDER SCREW, 1/2X1-3/4X3/8-16	
33	3860123	2	BOOM HOSE ROLLER	

Figure 2-3 Third Boom Section

644E

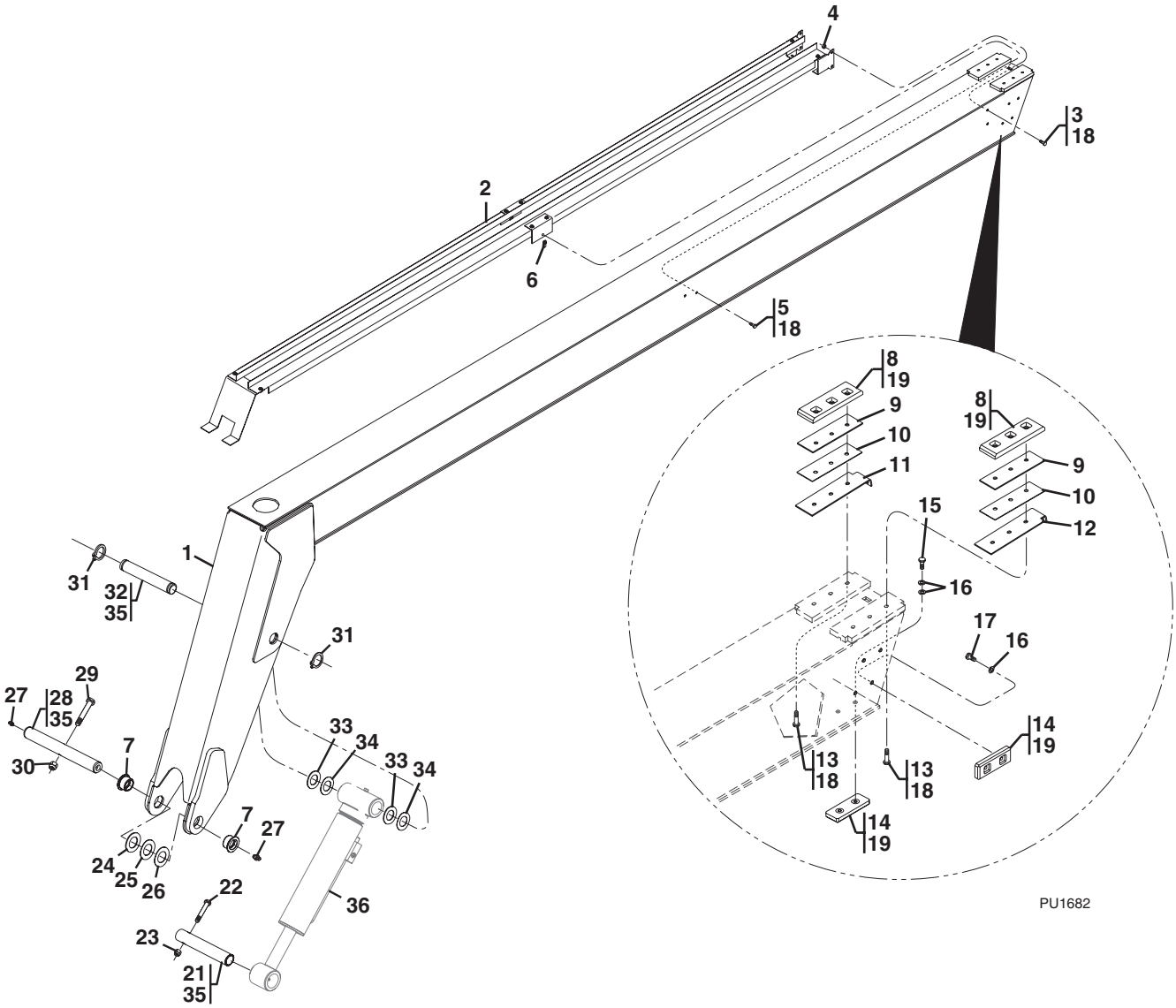

Figure 2-3 Third Boom Section

Item	Part Number	Qty.	Description	Rev.
1	7300099	1	THIRD BOOM SECTION	
2	7301253	1	BOOM HOSE GUIDE	
3	8303784	4	HEX HD CAPSCREW, M10-1.5X20mm, PC8.8	
4	8305630	4	HEX LOCKNUT, M10-1.5	
5	8303606	2	HEX HD CAPSCREW, M8-1.25X20mm, PC8.8	
6	8310686	2	RETAINER NUT, M8-1.25X25.4mm	
7	7300620	2	QUICK ATTACH PIVOT FLANGE BUSHING	
8	7300034	2	WEAR PAD, (includes inserts)	
9	7126172	AR	SHIM, 3.42mm, (10 GA)	
10	7126182	AR	SHIM, 1.90mm, (14 GA)	
11	7300512	1	LEFT CLAMP MOUNT BRACKET ASSY	
12	7300511	1	RIGHT CLAMP MOUNT BRACKET ASSY	
13	8310600	6	HEX HD CAPSCREW, M10-1.5X20mm, PC12.9	
14	7300032	6	WEAR PAD, (includes inserts)	
15	8303777	4	HEX HD CAPSCREW, M10-1.5X35mm, PC8.8	
16	8307221	AR	PLAIN WASHER, M10	
17	8303551	8	HEX HD CAPSCREW, M10-1.5X16mm, PC8.8	
18	8526007	AR	LOCTITE, #242, (apply to items 3, 5 & 13)	
19	8522050	AR	LUBRIPLATE GREASE, (apply to items 8 & 14)	
20	8522051	AR	RUST INHIBITOR, HEAVY DUTY, (not shown)	
21	7300112	1	FORK TILT QUICK ATTACH PIN	
22	8303265	1	HEX HD CAPSCREW, M12-1.75X130mm, PC8.8	
23	8310625	1	HEX LOCKNUT, M12-1.75	
24	8307904	AR	SHIM WASHER, 2X.048X3	
25	8310093	AR	SHIM WASHER, 2X.075X3.5	
26	8307918	AR	SHIM WASHER, 2X.134X3.5	
27	8520001	2	LUBE FITTING, 1/8	
28	7083922	1	CARRIAGE PIVOT PIN	
29	8310606	1	HEX HD CAPSCREW, M16-2.0X130mm, PC8.8	
30	8310217	1	HEX LOCKNUT, M16-2.0	
31	8630022	2	SHAFT RETAINING RING	
32	7300111	1	ATTACHMENT TILT CYLINDER BOOM PIN, (644E)	
	7300829	1	ATTACHMENT TILT CYLINDER BOOM PIN, (944E)	
33	8310706	AR	SHIM WASHER, 2.25X.048X3.75	
34	8310707	AR	SHIM WASHER, 2.25X.075X3.75	
35	8522012	AR	ANTI-SIEZE LUBE, (apply to items 21, 28 & 32)	
36		Ref	ATTACHMENT TILT CYLINDER, (see Figure 9-3 for details)	

Figure 2-3 Third Boom Section

944E

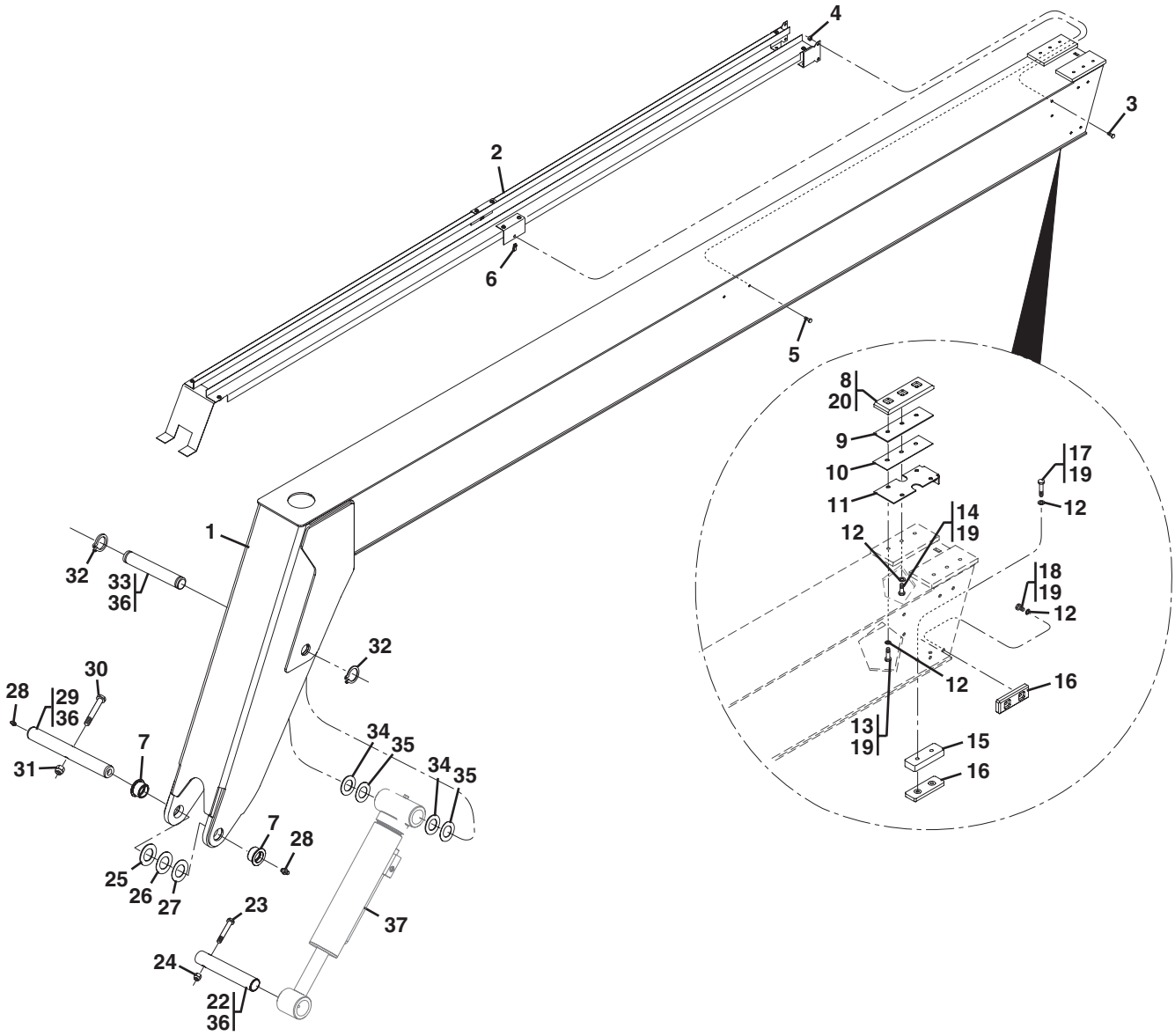

PU1691

Figure 2-3 Third Boom Section

Item	Part Number	Qty.	Description	Rev.
1	7300816	1	THIRD BOOM SECTION	
2	7301257	1	BOOM HOSE GUIDE	
3	8303784	4	HEX HD CAPSCREW, M10-1.5X20mm, PC8.8	
4	8305630	4	HEX LOCKNUT, M10-1.5	
5	8303606	2	HEX HD CAPSCREW, M8-1.25X20mm, PC8.8	
6	8310686	2	RETAINER NUT, M8-1.25X25.4mm	
7	7300620	2	QUICK ATTACH PIVOT FLANGE BUSHING	
8	7300034	2	WEAR PAD, (includes inserts)	
9	7126172	AR	SHIM, 3.42mm, (10 GA)	
10	7126182	AR	SHIM, 1.90mm, (14 GA)	
11	7300899	2	CLAMP MOUNT BRACKET ASSY	
12	8307221	18	PLAIN WASHER, M10	
13	8303778	4	HEX HD CAPSCREW, M10-1.5X40mm, PC8.8	
14	8303777	2	HEX HD CAPSCREW, M10-1.5X35mm, PC8.8	
15	7300973	2	SPACER	
16	7300032	6	WEAR PAD, (includes inserts)	
17	8310125	4	HEX HD CAPSCREW, M10-1.5X55mm, PC8.8	
18	8303551	8	HEX HD CAPSCREW, M10-1.5X16mm, PC8.8	
19	8526007	AR	LOCTITE, #242, (apply to items 13, 14 & 17)	
20	8522050	AR	LUBRIPLATE GREASE, (apply to item 8)	
21	8522051	AR	RUST INHIBITOR, HEAVY DUTY, (not shown)	
22	7300112	1	FORK TILT QUICK ATTACH PIN	
23	8303265	1	HEX HD CAPSCREW, M12-1.75X130mm, PC8.8	
24	8310625	1	HEX LOCKNUT, M12-1.75	
25	8307904	AR	SHIM WASHER, 2X.048X3	
26	8310093	AR	SHIM WASHER, 2X.075X3.5	
27	8307918	AR	SHIM WASHER, 2X.134X3.5	
28	8520001	2	LUBE FITTING, 1/8	
29	7083922	1	CARRIAGE PIVOT PIN	
30	8310606	1	HEX HD CAPSCREW, M16-2.0X130mm, PC8.8	
31	8310217	1	HEX LOCKNUT, M16-2.0	
32	8630022	2	SHAFT RETAINING RING	
33	7300111	1	ATTACH. TILT CYLINDER BOOM PIN, (644E)	
	7300829	1	ATTACH. TILT CYLINDER BOOM PIN, (944E)	
34	8310706	AR	SHIM WASHER, 2.25X.048X3.75	
35	8310707	AR	SHIM WASHER, 2.25X.075X3.75	
36	8522012	AR	ANTI-SIEZE LUBE, (apply to items 22, 29 & 33)	
37		Ref	ATTACHMENT TILT CYLINDER, (see Figure 9-3 for details)	

Figure 2-4 Quick Attach

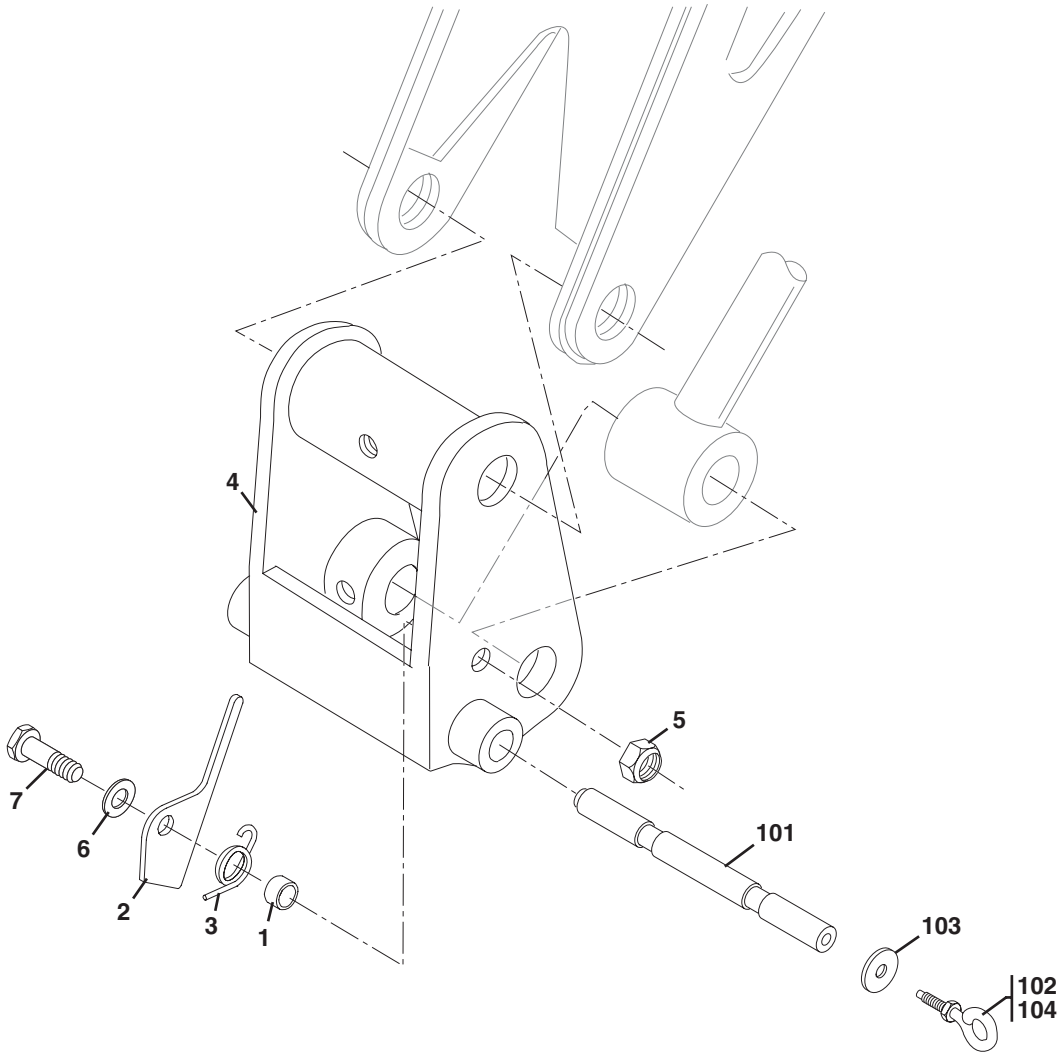

Figure 2-4 Quick Attach

Item	Part Number	Qty.	Description	Rev.
	7300094	1	QUICK ATTACH ASSY, (includes items 1 thru 7)	AB
1	7085552	1	TORSION SPRING	
2	7085571	1	QUICK ATTACH SPACER	
3	7121422	1	QUICK ATTACH LATCH	
4	7300095	1	QUICK ATTACH	
5	8305655	1	HEX LOCKNUT, M20-2.5	
6	8310426	1	PLAIN WASHER, M20	
7	8310700	1	HEX HD CAPSCREW, M20-2.5X70mm, PC8.8	
	7118892	1	LOCK PIN, (includes items 101 thru 104)	B
101	7118882	1	PIN	
102	8310266	1	EYE w/NUT BOLT	
103	8310276	1	WASHER	
104	8526007	AR	LOCTITE, #242, (apply to item 102)	
			NOTE: ITEM NUMBERS NOT LISTED ARE NOT USED ON THIS FIGURE	

Figure 2-5 Boom Extend Chain

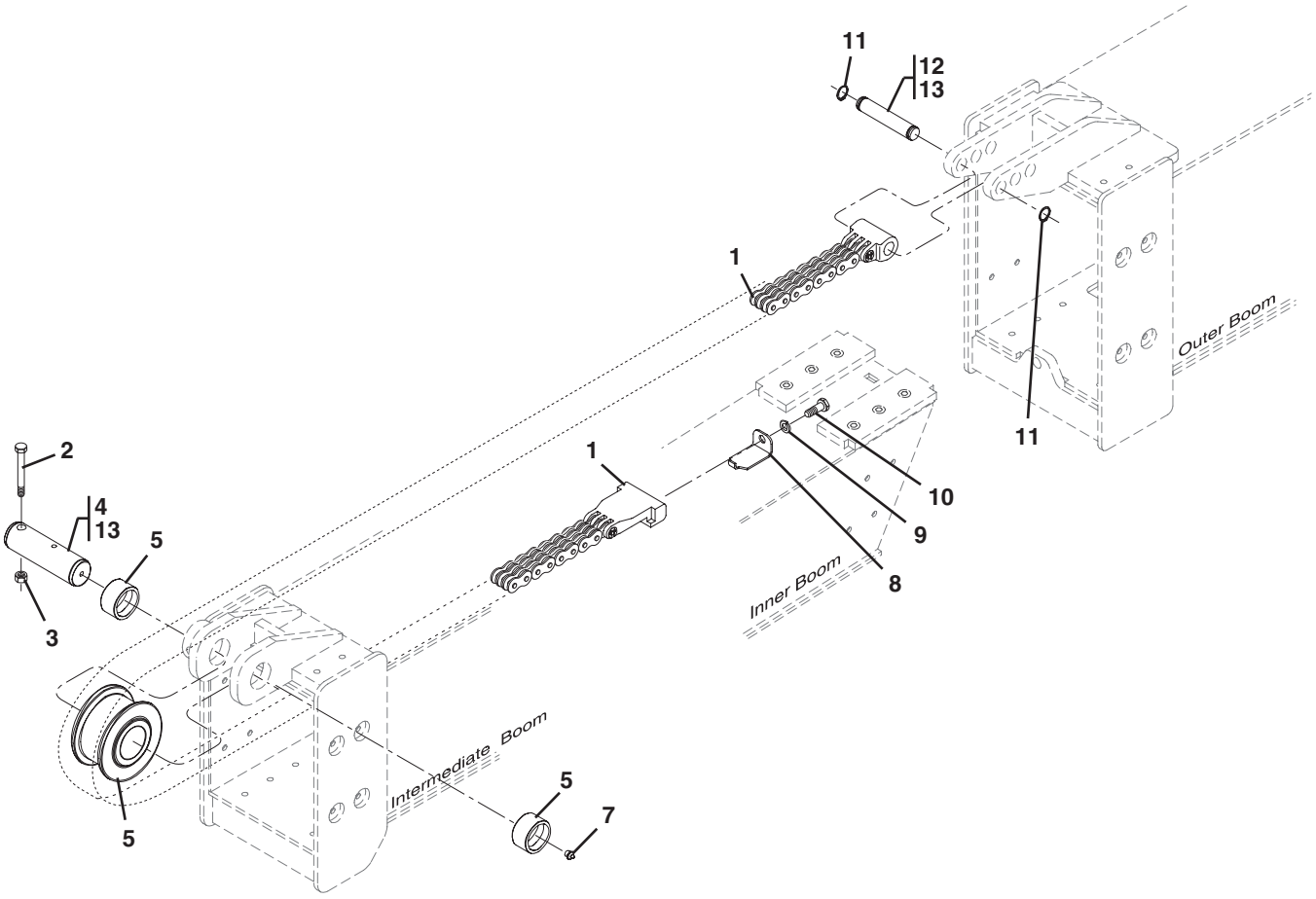

PU1701

Figure 2-5 Boom Extend Chain

Item	Part Number	Qty.	Description	Rev.
	7300076	Ref.	EXTEND CHAIN ASSY	D
1	7300911	1	EXTEND CHAIN & CLEVIS ASSY	
2	8310651	1	HEX HD CAPSCREW, M16-2.0X100mm, PC8.8	
3	8310217	1	HEX LOCKNUT, M16-2.0	
4	7117582	1	EXTEND CHAIN SHEAVE PIN	
5	1001101867	1	BUSHING SHEAVE ASSY	
	7117502	2	CHAIN SHEAVE BUSHING	
	7114032	1	EXTEND CHAIN SHEAVE	
7	8520001	1	GREASE FITTING, 1/8	
8	7300078	1	CLEVIS RETAINER BRACKET	
9	8307025	1	LOCKWASHER, M12	
10	8303790	1	HEX HD CAPSCREW, M12-1.75X30mm, PC8.8	
11	8642236	2	RETAINING RING	
12	7300613	1	CLEVIS PIN	
13	8522012	AR	ANTI-SIEZE LUBE, (apply to items 4 & 12)	
			NOTE: ITEM NUMBERS NOT LISTED ARE NOT USED ON THIS FIGURE	

Figure 2-6 Boom Retract Chain

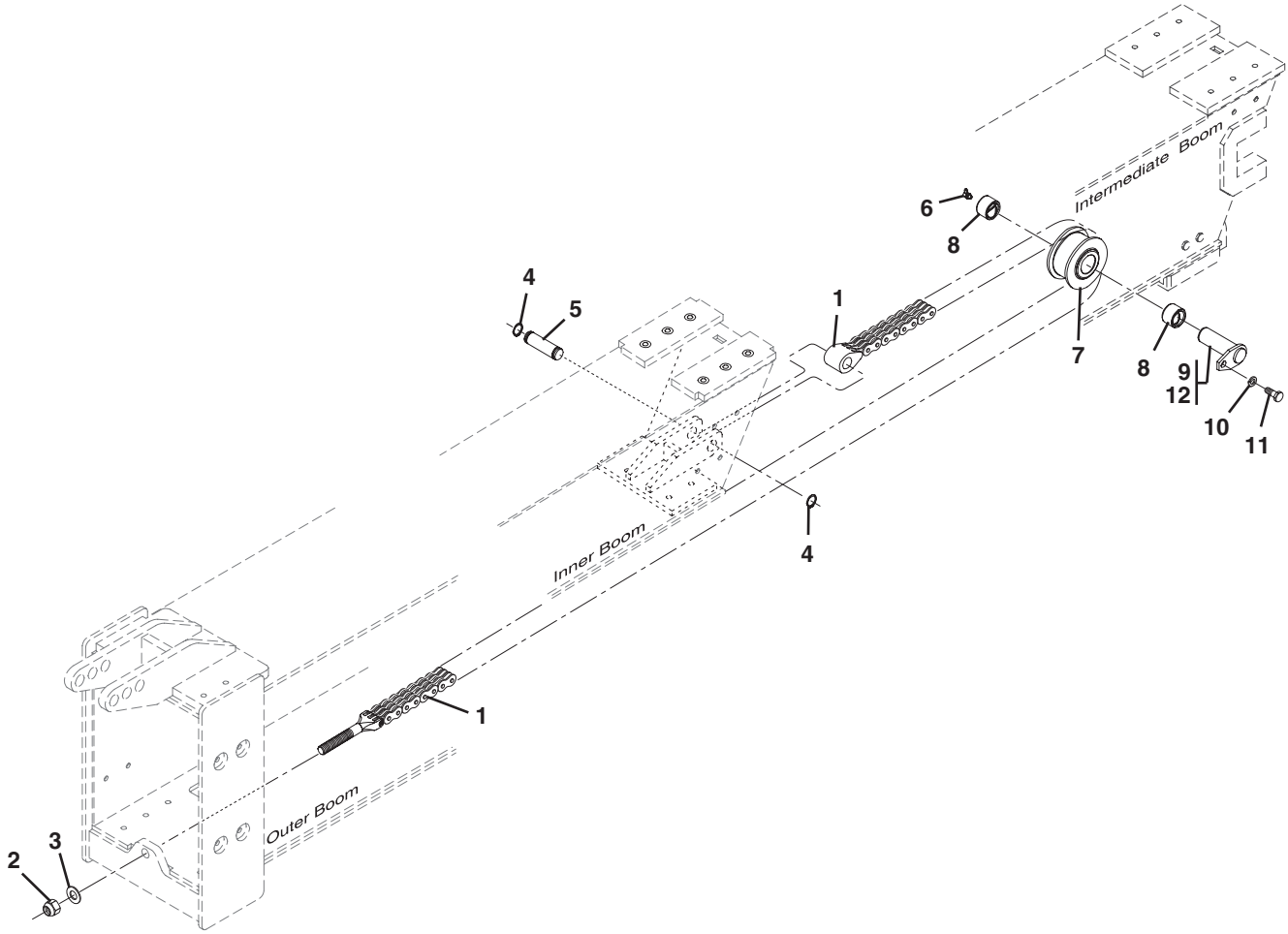

PU1710

Figure 2-6 Boom Retract Chain

Item	Part Number	Qty.	Description	Rev.
1	7300912	1	RETRACT CHAIN & CLEVIS ASSY, (644E)	
	7300970	1	RETRACT CHAIN & CLEVIS ASSY, (944E)	
2	8305646	1	HEX LOCKNUT, 3/4-16	
3	8307703	1	PLAIN WASHER, 3/4	
4	8642236	2	RETAINING RING	
5	7300106	1	CLEVIS PIN, 90 DEGREES	
6	8520003	1	GREASE FITTING	
7	7138986	1	RETRACT CHAIN SHEAVE ASSY, (includes item 8)	
8	7138979	2	CHAIN SHEAVE BUSHING	
9	7300080	1	RETRACT CHAIN SHEAVE PIN	
10	8307025	1	LOCKWASHER, M12	
11	8303618	1	HEX HD CAPSCREW, M12-1.75X25mm, PC8.8	
12	8522012	AR	ANTI-SIEZE LUBE, (apply to item 9)	

Figure 2-7 Transfer Carriage Assembly

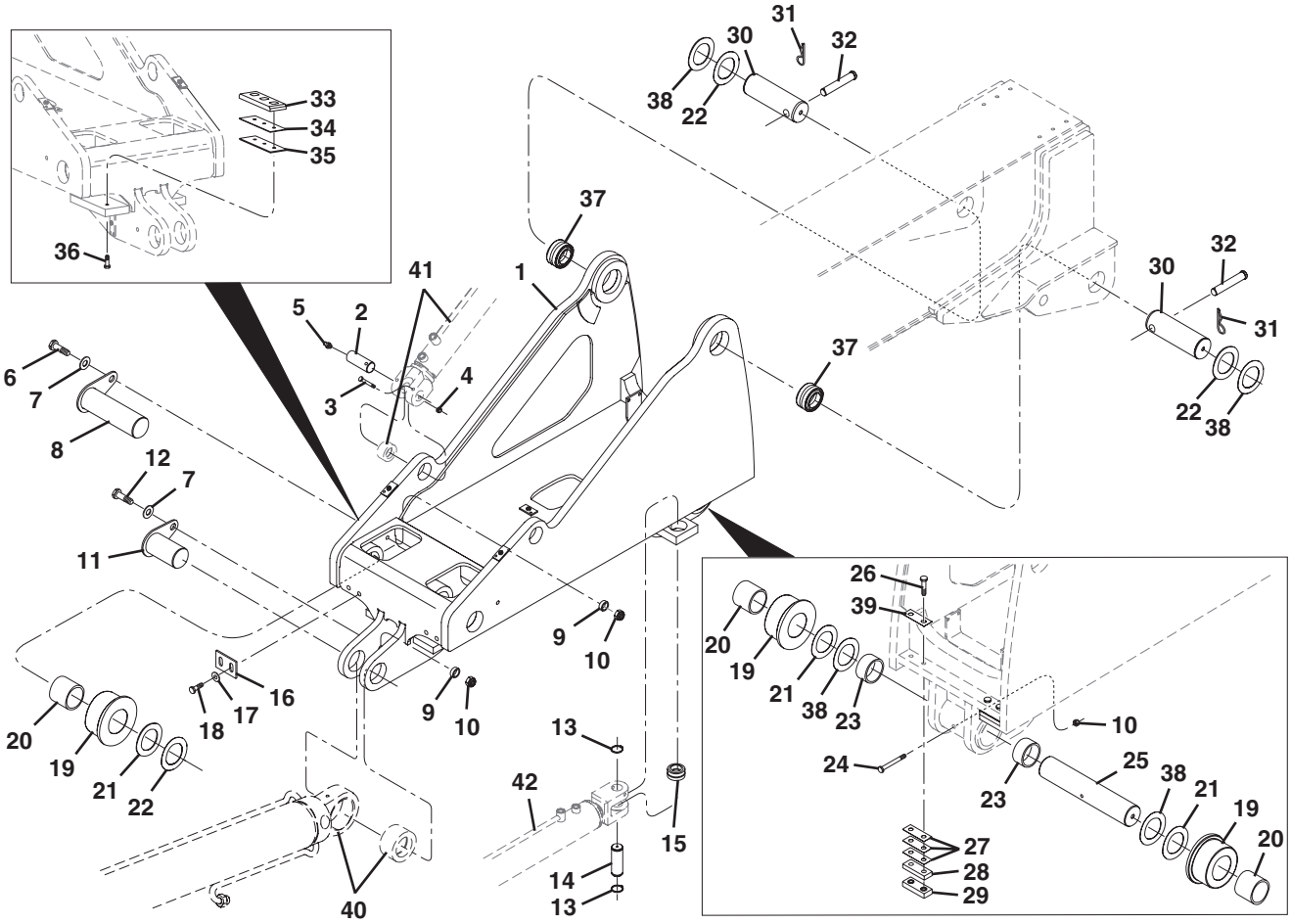

PU1731

Figure 2-7 Transfer Carriage Assembly

Item	Part Number	Qty.	Description	Rev.
1	7310027S	1	TRANSFER CARRIAGE	
2	7137142	2	SLAVE CYLINDER PIN	
3	8310424	2	HEX HD CAPSCREW, M8-1.25X90mm, PC8.8	
4	8305654	2	HEX LOCKNUT, M8-1.25	
5	8520001	2	LUBE FITTING, 1/8	
6	8303531	2	HEX HD CAPSCREW, M12-1.75X65mm, PC8.8	
7	8310657	3	PLAIN WIDE WASHER, M12	
8	7139915	2	RETENTION PIN	
9	7139886	3	RETENTION PIN SPACER	
10	8310625	4	HEX LOCKNUT, M12-1.75	
11	7300580	1	HOIST CYLINDER BASE PIN	
12	8310218	1	HEX HD CAPSCREW, M12-1.75X55mm, PC8.8	
13	8630026	2	EXTERNAL SNAP RING, 38mm	
14	7300503	1	TRANSFER CYLINDER PIN	
15	8050001	1	SELF ALIGN BEARING	
16	7301308	2	SCRAPER PLATE	
17	8307221	4	PLAIN WASHER, M10	
18	8303798	4	HEX HD CAPSCREW, M10-1.5X25mm, PC8.8	
19	7139911	4	ROLLER ASSY, (includes item 20)	
20	8050086	4	BEARING	
21	8310689	AR	SHIM WASHER, SELF LUBE, 3.00X4.50X.08	
22	8307913	AR	SHIM WASHER, SELF LUBE, 3.060X.120X4.750	
23	7300716	2	BUSHING, 3X3.75X2.50	
24	8310655	1	HEX HD CAPSCREW, M12-1.75X140mm, PC8.8	
25	7300566	1	REAR TRANSFER ROLLER PIN	
26	8310220	4	HEX HD CAPSCREW, 1/2-20X2.25, GR5	
27	10118167	AR	REAR ROLLER SUPPORT SHIM, (11 GA)	
28	7301033	2	REAR RETAINER SPACER	
29	10165950	2	REAR ROLLER RETAINER SLIDE BLOCK	
30	7300572	2	BOOM PIVOT PIN	
31	8302446	2	BOOM PIVOT CLEVIS COTTER PIN	
32	8310662	2	BOOM PIVOT PIN CLEVIS	
33	7300034	2	WEAR PAD, (includes inserts)	
34	7126182	AR	SHIM, 3.42mm, (10 GA)	
35	7126172	AR	SHIM, 1.90mm, (14 GA)	
36	8303778	4	HEX HD CAPSCREW, M10-1.5X40mm, PC8.8	
37	8050085	2	BEARING	
38	8307912	AR	SHIM WASHER, 3.060X.060X4.750	
39	10165110	AR	REAR ROLLER SUPPORT SHIM, (II GA)	
40		Ref	LIFT/LOWER CYLINDER, (see Figure 9-2 for details)	
41		Ref	SLAVE CYLINDER, (see Figure 9-6 for details)	
42		Ref	TRANSFER CYLINDER, (see Figure 9-7 for details)	

This Page Intentionally Left Blank

SECTION 3
ATTACHMENTS

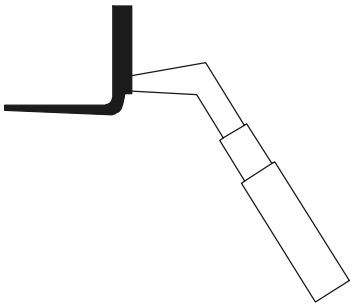

Figure 3-1 Buckets

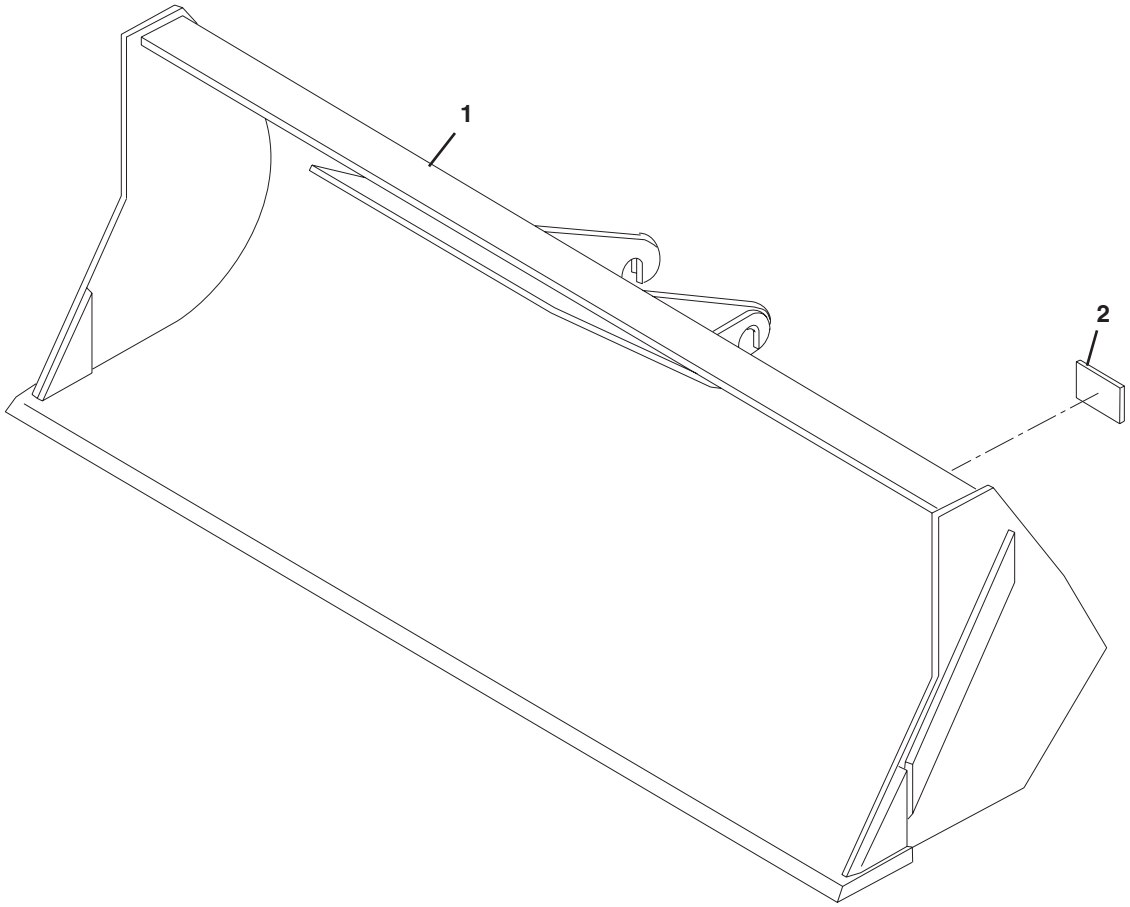

PU1740

Figure 3-1 Buckets

Item	Part Number	Qty.	Description	Rev.
1	7110744	1	UTILITY BUCKET, 1-1/4 CU YD., (includes item 2)	D
	1001100822	1	72” BUCKET, 1.0 ^{3} YARD	
	1001100823	1	96” BUCKET, 1.5 ^{3} YARD	
	1001100824	1	102” BUCKET, 2.0 ^{3} YARD	
2		1	SERIAL NUMBER PLATE	

Figure 3-2 Tilt Carriage

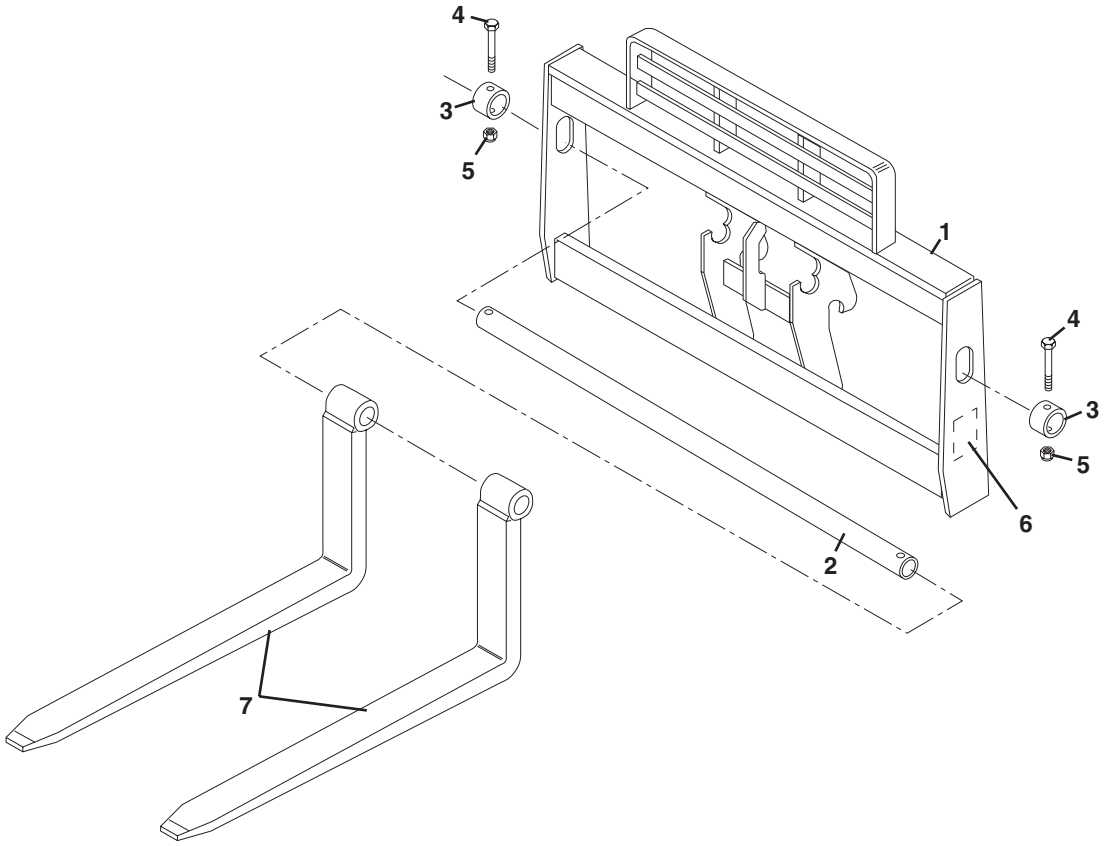

PA3820

Figure 3-2 Tilt Carriage

Item	Part Number	Qty.	Description	Rev.
	7118993	1	STANDARD CARRIAGE ASSY, (includes items 1 thru 6)	G
1		1	CARRIAGE	
2	7128772	1	FORK PIVOT SHAFT, (48” carriage)	
	90451058	1	FORK PIVOT SHAFT, (50” carriage)	
	7128792	1	FORK PIVOT SHAFT, (60” carriage)	
	90551013	1	FORK PIVOT SHAFT, (72” carriage)	
3	90200003	2	COLLAR	
4	8303634	2	HEX HD CAPSCREW, 5/8-11X4	
5	8305643	2	HEX LOCKNUT, 5/8-11	
6		1	S/N PLATE	
7		Ref	FORKS, (see Figure 3-14 for details)	

Figure 3-2 Tilt Carriage

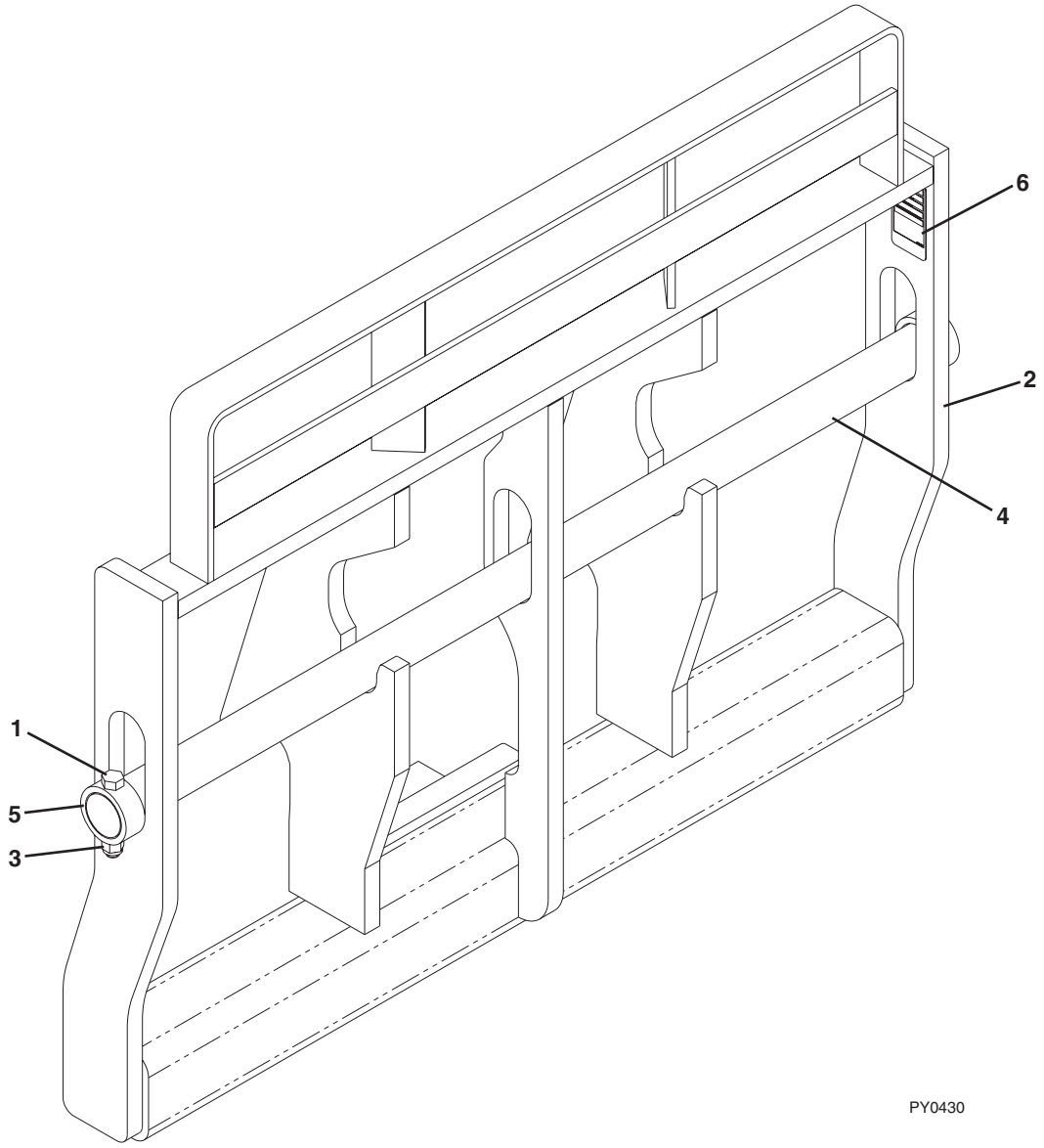

Figure 3-2 Tilt Carriage

Item	Part Number	Qty.	Description	Rev.
	1170021	1	50” TILT CARRIAGE, (includes all items)	B
	1170024	1	60” TILT CARRIAGE, (includes all items)	B
	1170027		72” TILT CARRIAGE, (includes all items)	B
1	0642032	2	HEX HD CAPSCREW, 5/8-11X4	
2		1	TILT CARRIAGE	
3	3300240	2	LOCKNUT, 5/8-11	
4	3423275	1	50” FORK PIN	
	3423242	1	60” FORK PIN	
	3423276	1	72” FORK PIN	
5	90200003	2	COLLAR	
6		1	S/N PLATE	

Figure 3-3 Side Tilt Carriage

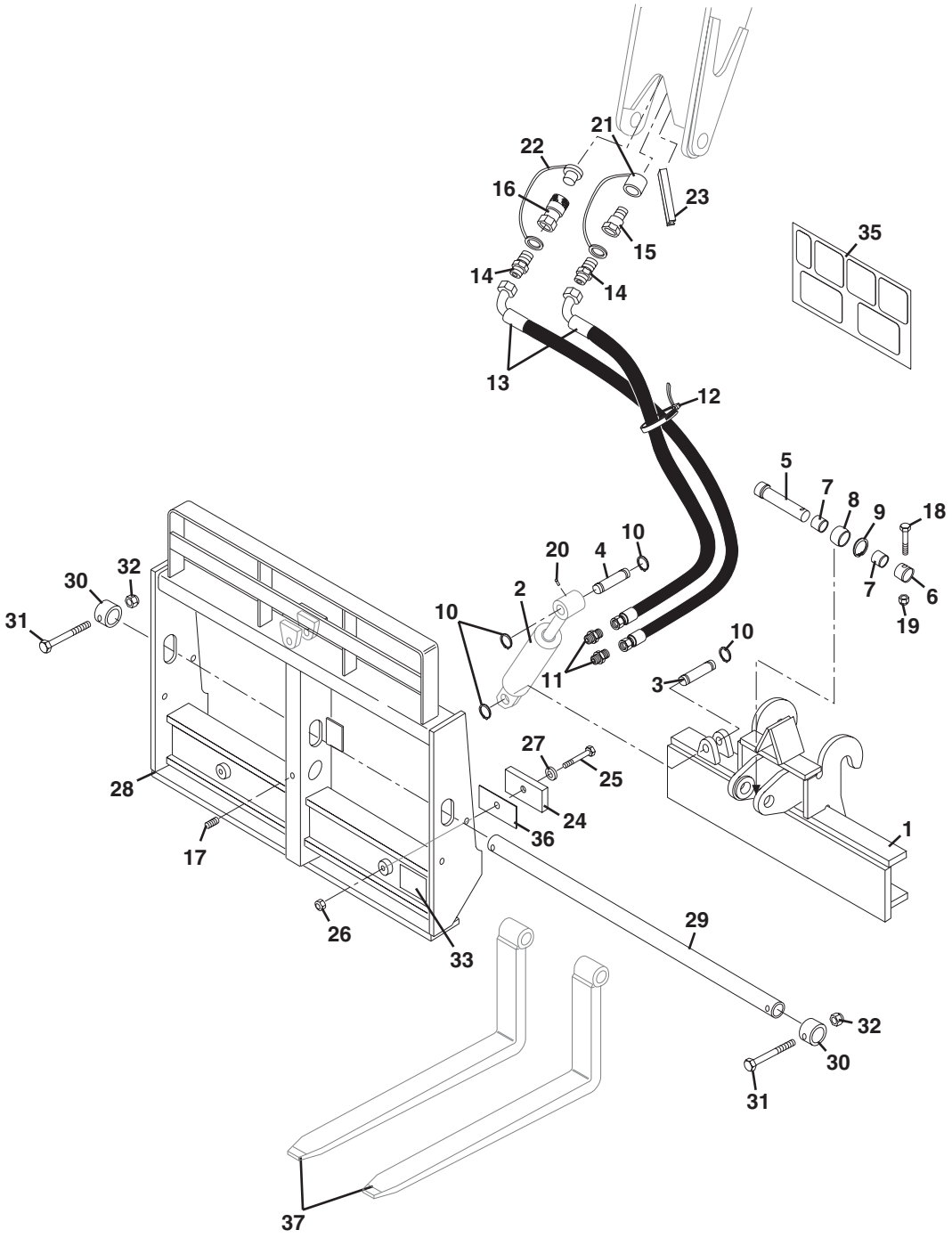

PA3851

Figure 3-3 Side Tilt Carriage

Item	Part Number	Qty.	Description	Rev.
	7117214	1	SIDE TILT CARRIAGE ASSY, (includes items 1 thru 36)	N
1	7117204	1	PIVOT BASE	
2		Ref	SIDE TILT CYLINDER, (see Figure 12-4 for details)	
3	7077501	1	CYLINDER BASE PIN	
4	7077511	1	CYLINDER ROD PIN	
5	7085411	1	PIVOT PIN	
6	7085501	1	PIN LOCKING COLLAR	
7	7077481	2	SPACER	
8	8065634	1	SELF ALIGN BUSHING	
9	8642001	1	SNAP RING	
10	8642235	4	SNAP RING	
11	2220371	2	STRAIGHT CONNECTOR	
12	8584001	1	TY-RAP	
13	2711992	2	HOSE ASSY	
14	2220372	2	STRAIGHT CONNECTOR	
15	91403414	1	MALE QUICK DISCONNECT	
	8640029	1	NOSE SEAL, (not shown)	
16	91403413	1	FEMALE QUICK DISCONNECT	
	8640029	1	NOSE SEAL, (not shown)	
	8640028	1	COUPLER BODY SEAL, (not shown)	
	8640032	1	COUPLER BODY SEAL BACK-UP RING, (not shown)	
17	88761001	1	GREASE FITTING	
18	8303770	1	HEX HD CAPSCREW, 3/8-16X2-3/4	
19	8305645	1	HEX LOCKNUT, 3/8-16 ESNA	
20	8520013	2	LUBE FITTING	
21	8420053	1	DUST CAP, #8	
22	8420055	1	DUST PLUG, #8	
23	7125741	1	MOULDING	
24	7065482	2	WEAR PAD	
25	8303739	2	HEX HD CAPSCREW, 5/16-18X1-1/4	
26	8305626	2	HEX LOCKNUT, 5/16-18	
27	8307203	2	FLAT HEAVY WASHER	
28	7117244	1	48” SIDE TILT CARRIAGE	
	7300983	1	50” SIDE TILT CARRIAGE	
	7117254	1	60” SIDE TILT CARRIAGE	
	7117264	1	72” SIDE TILT CARRIAGE	
29	7128772	1	FORK PIVOT SHAFT, (48” carriage)	
	90451058	1	FORK PIVOT SHAFT, (50” carriage)	
	7128792	1	FORK PIVOT SHAFT, (60” carriage)	
	90551013	1	FORK PIVOT SHAFT, (72” carriage)	
30	90200003	2	COLLAR	
31	8303634	2	HEX HD CAPSCREW, 5/8-11X4	
32	8305643	2	HEX LOCKNUT, 5/8-11	
33		1	S/N PLATE	
35	4108232	1	CAPACITY CHART DECAL	
36	7070191	AR	SHIM	
36	7070191	AR	SHIM	
37		Ref	FORKS, (see Figure 3-14 for details)	
			NOTE: ITEM NUMBERS NOT LISTED ARE NOT USED ON THIS FIGURE	

Figure 3-3 Side Tilt Carriage

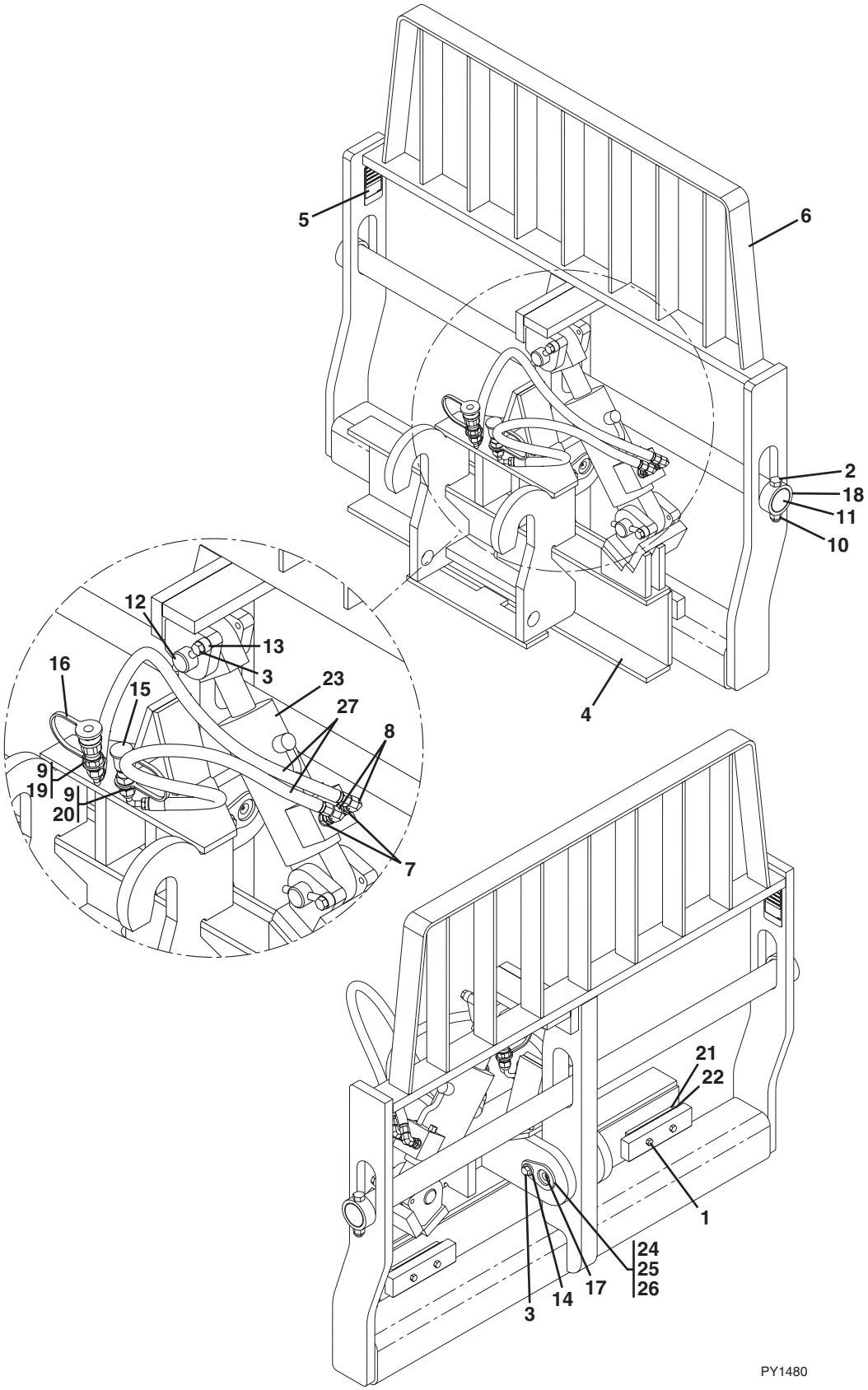

Figure 3-3 Side Tilt Carriage

Item	Part Number	Qty.	Description	Rev.
	1170054	1	50” SIDE TILT CARRIAGE, (includes all items)	C
	1001101956	1	60” SIDE TILT CARRIAGE, (includes all items)	C
	1170057	1	72” SIDE TILT CARRIAGE, (includes all items)	C
1	0641612	4	HEX HD CAPSCREW, 3/8-16X1-1/2	
2	0642032	2	HEX HD CAPSCREW, 5/8-11X4	
3	0681810	3	HEX HD CAPSCREW, 1/2-13X1-1/4	
4		1	CARRIAGE BASE	
5		1	S/N PLATE	
6		1	CARRIAGE, SIDE TILT	
7	2110606	2	CONNECTOR	
8	2172106	2	CONNECTOR, 90 DEGREES	
9	2110808	2	CONNECTOR	
10	3300240	2	LOCK NUT, 5/8-11	
11	3423275	1	50” FORK PIN	
	3423242	1	60” FORK PIN	
	3423276	1	72” FORK PIN	
12	3423307	2	PIN	
13	3841203	2	KEEPER	
14	4891800	1	WASHER, 1/2	
15	8420053	1	DUST CAP	
16	8420055	1	DUST PLUG	
17	88671001	1	GREASE FITTING	
18	90200003	2	COLLAR	
19	91403413	1	CONNECTOR	
20	91403414	1	CONNECTOR	
21	1001090063	2	WEAR PAD	
22	1001090064	A/R	SHIM	
23		Ref	HYDRAULIC CYLINDER, (see Figure 9-20 for details)	
24	1001090140	1	BEARING	
25	1001099113	1	PIN	
26	1001099115	2	SLEEVE	
27	1001102378	2	HOSE ASSY, 3/8X39	

Figure 3-4 Swing Carriage

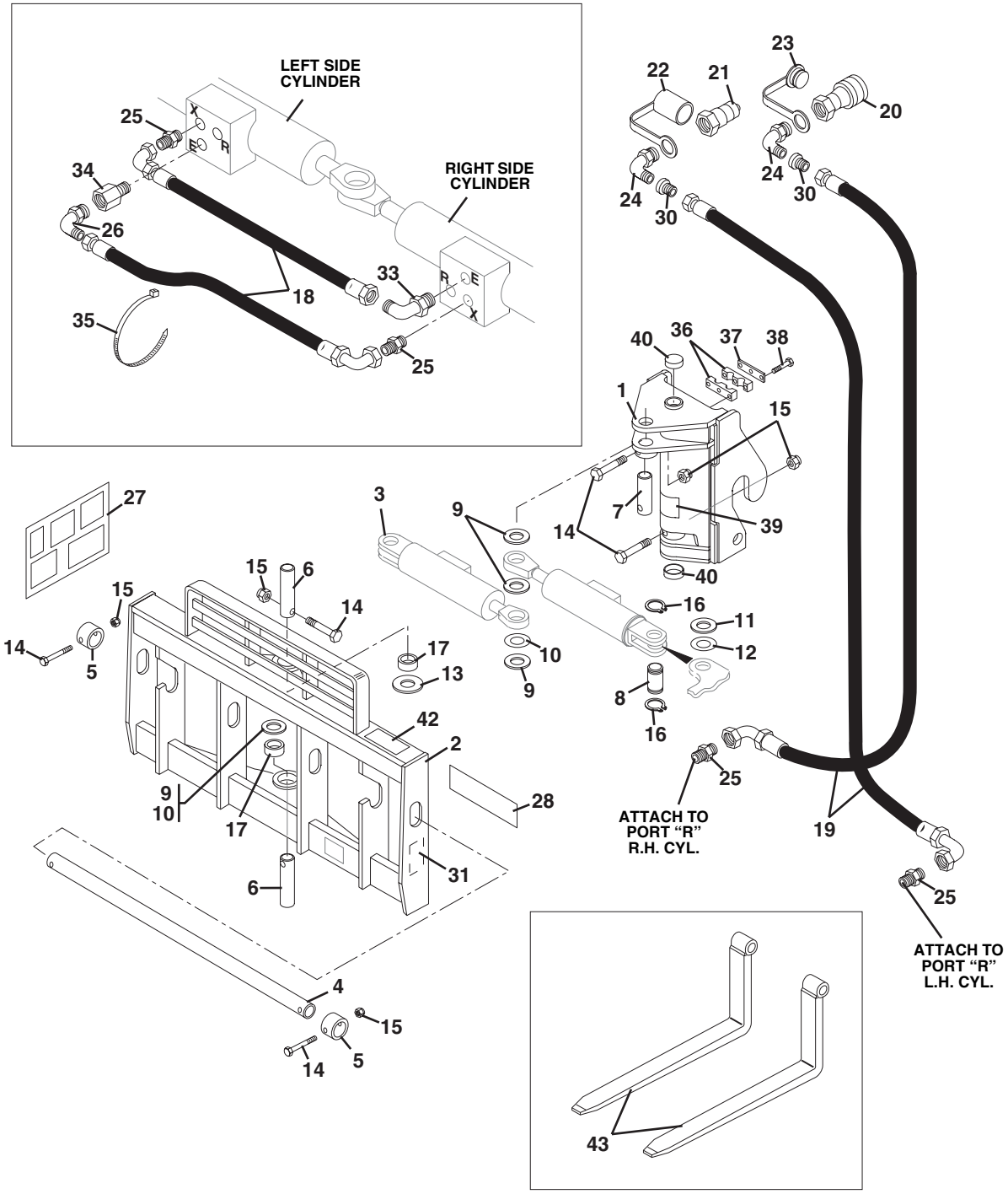

PA3860

Figure 3-4 Swing Carriage

Item	Part Number	Qty.	Description	Rev.
	7125800	1	72” SWING CARRIAGE ASSY, (includes items 1 thru 42)	
1	7110494	1	PIVOT BASE	
2	7110694	1	72” CARRIAGE	
3		Ref	SWING CARRIAGE CYLINDER, (see Figure 12-3 for details)	
4	90551013	1	FORK PIVOT SHAFT	
5	90200003	2	COLLAR	
6	7110702	2	CARRIAGE PIVOT PIN	
7	7110712	1	CYLINDER PIVOT PIN, (rod end)	
8	7110722	2	CYLINDER PIVOT PIN, (base end)	
9	8307918	AR	SHIM, 2 IDX10GA.	
10	8307904	AR	SHIM, 2 IDX18GA.	
11	8310161	AR	SHIM, 1-1/2 IDX10GA.	
12	8310160	AR	SHIM, 1-1/2 IDX18GA.	
13	7062922	1	THRUST BEARING	
14	8303634	5	HEX HD CAPSCREW, 5/8-11X4	
15	8305643	5	HEX LOCKNUT, 5/8-11	
16	8642207	4	RETAINING RING	
17	8065062	2	SELF LUBE BEARING	
18	6604662	2	HOSE ASSY	
19	2717287	2	HOSE ASSY	
20	91403413	1	FEMALE QUICK DISCONNECT	
	8640029	1	SEAL NOSE, (not shown)	
	8640028	1	COUPLER BODY SEAL, (not shown)	
	8640032	1	COUPLER BODY SEAL BACK-UP RING, (not shown)	
21	91403414	1	MALE QUICK DISCONNECT	
	8640029	1	NOSE SEAL, (not shown)	
22	8420053	1	DUST CAP, #8	
23	8420055	1	DUST PLUG, #8	
24	2220628	2	ELBOW, 90 DEGREES	
25	2220415	4	STRAIGHT CONNECTOR	
26	2220473	1	ELBOW, 90 DEGREES	
27	4107692	2	CAPACITY CHART DECAL	
28	4107702	1	TIP OVER HAZARD, DANGER DECAL	
30	2220609	2	TUBE END REDUCER, 6-4	
31		1	S/N PLATE	
33	2220775	1	ELBOW, 90 DEGREES	
34	8770016	1	REDUCER	
35	8584001	4	TY-RAP	
36	8769132	2	CLAMP HALF	
37	6608621	1	CLAMP COVER	
38	8303715	3	HEX HD CAPSCREW, 5/16-18X1-1/2	
39	4107712	1	NO TRUSS BOOM DANGER DECAL	
40	8580315	2	TRIM PLUG, 2-1/2 DIA	
42	4110473	1	HOSE ROUTING DECAL	
43		Ref	FORKS, (see Figure 3-14 for details)	
			NOTE: ITEM NUMBERS NOT LISTED ARE NOT USED ON THIS FIGURE	

Figure 3-4 Swing Carriage

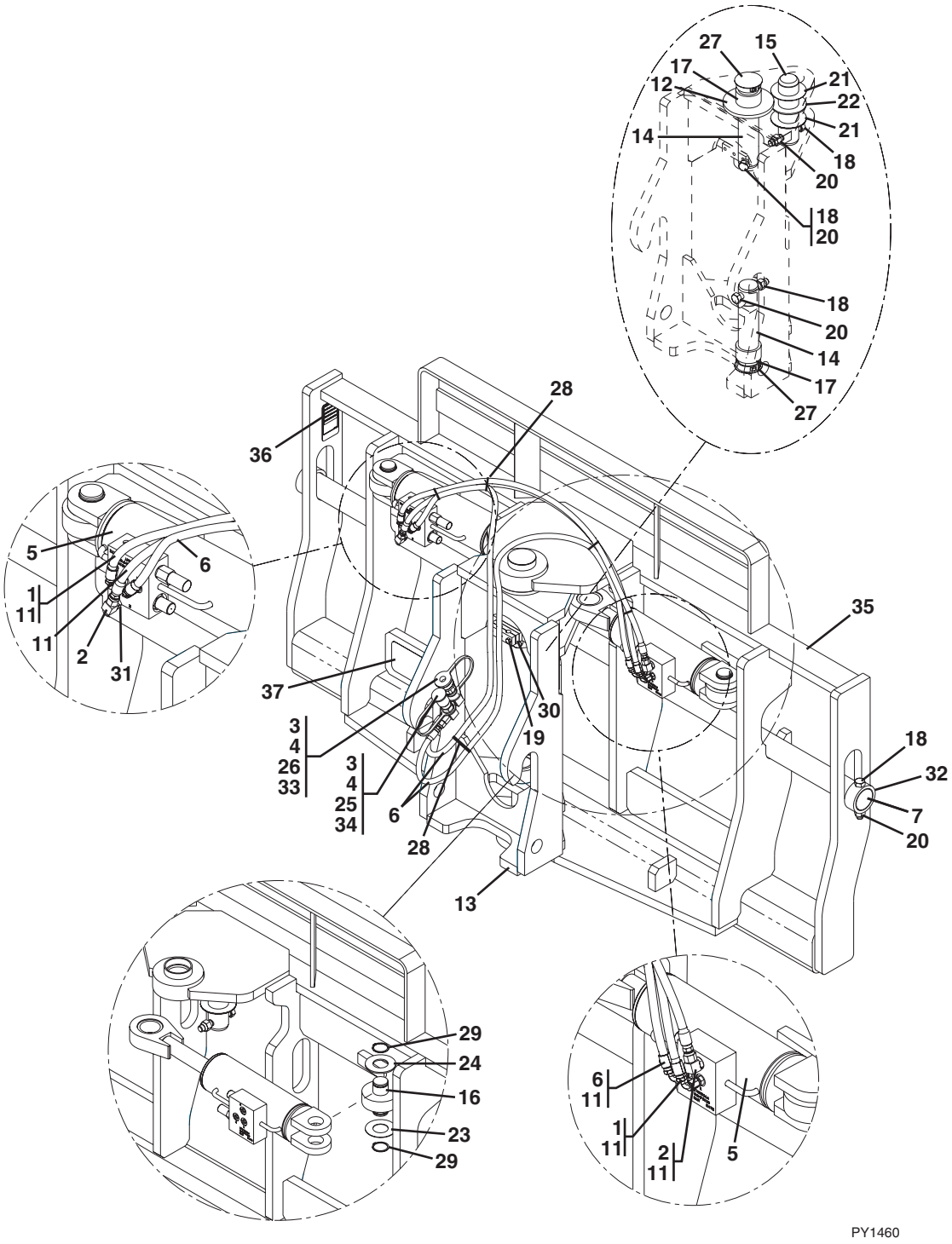

Figure 3-4 Swing Carriage

Item	Part Number	Qty.	Description	Rev.
	1001095418	1	90 DEGREE SWING CARRIAGE, 72”, (includes all items)	C
1	2220415	4	CONNECTOR	
2	2220473	2	CONNECTOR, 90 DEGREES	
3	2220609	2	CONNECTOR	
4	2220628	2	CONNECTOR, 90 DEGREES	
5		Ref	SWING CYLINDER, (see Figure 9-21 for details)	
6	2717287	2	HOSE ASSY, 1/4X58	
7	3423276	1	PIN	
11	6604662	2	HOSE ASSY, 1/4X40.5	
12	7062922	1	WASHER	
13		1	PIVOT WELDMENT	
14	7110702	2	PIVOT PIN	
15	7110712	1	PIN	
16	7110722	2	PIN	
17	8065062	2	BUSHING	
18	8303634	5	HEX HD CAPSCREW, 5/8-11X4, GR5	
19	8303715	3	HEX HD CAPSCREW, 5/16-18X1.5, GR5	
20	8305643	5	HEX NUT, 5/8-11	
21	8307904	A/R	SHIM	
22	8307918	A/R	SHIM	
23	8310160	A/R	SHIM	
24	8310161	A/R	SHIM	
25	8420053	1	DUST CAP	
26	8420055	1	DUST PLUG	
27	8580315	2	PLUG	
28	8584001	5	TIE WRAP	
29	8642207	4	RETAINING RING	
30	8769132	2	CLAMP	
31	8770016	1	CONNECTOR	
32	90200003	2	COLLAR	
33	91403413	1	CONNECTOR	
34	91403414	1	CONNECTOR	
35		1	CARRIAGE FRAME	
36		1	S/N PLATE	
37	1001110704	1	DECAL, WARNING CRUSH HAZARD	
			NOTE: ITEM NUMBERS NOT LISTED ARE NOT USED ON THIS FIGURE	

Figure 3-5 Sheet Material Handler

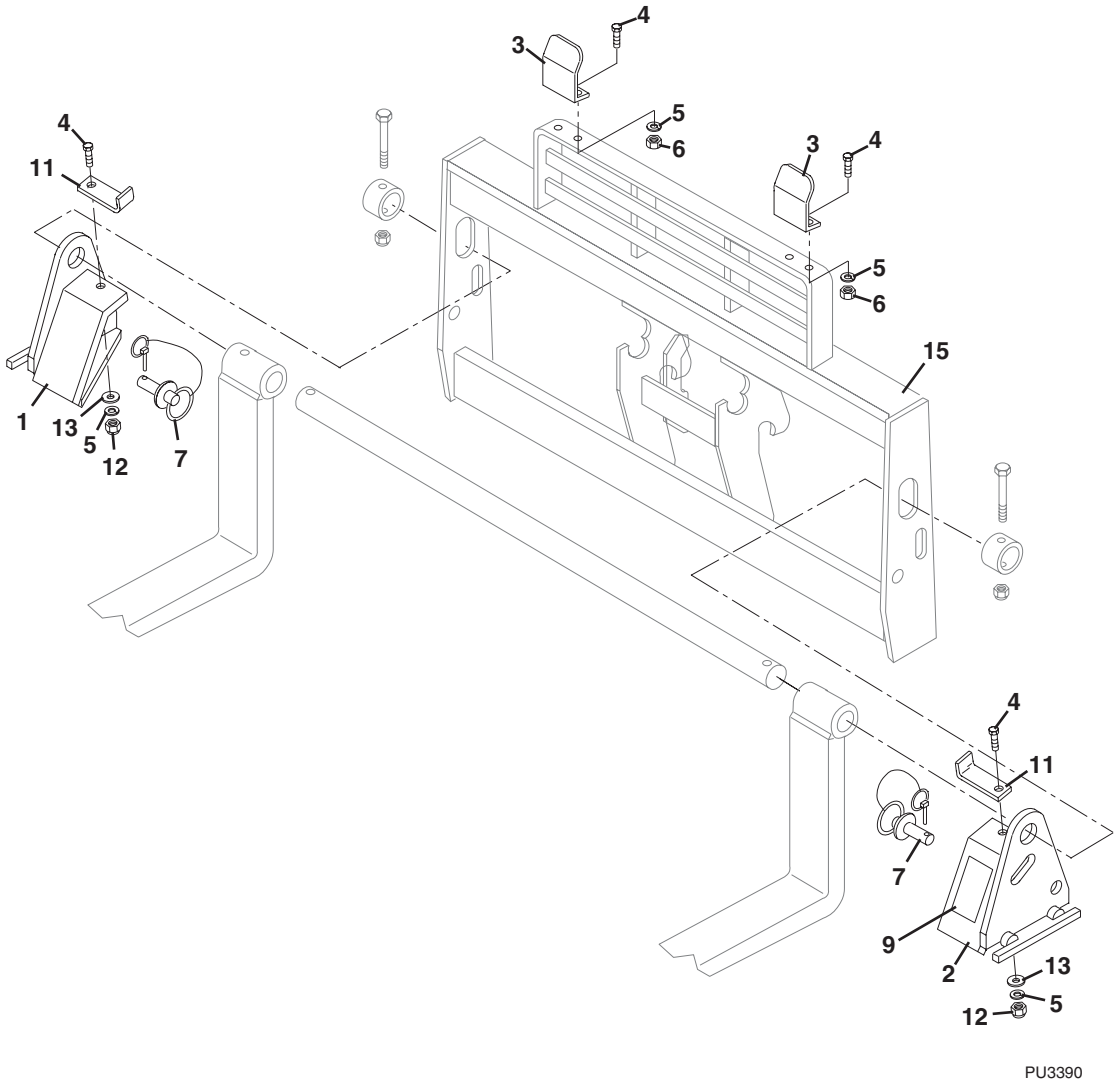

Figure 3-5 Sheet Material Handler

Item	Part Number	Qty.	Description	Rev.
	7129300	1	SHEET MATERIAL HANDLER w/72” SWING CARRIAGE ASSY, (includes items 1 thru 14)	
	7112704	1	SHEET MATERIAL HANDLER w/72” SWING CARRIAGE ASSY, (includes items 1 thru 14)	
1	7112533	1	RIGHT SIDE FORK SUPPORT	
2	7112523	1	LEFT SIDE FORK SUPPORT	
3	7112642	2	BACKREST EXTENSION	
4	8303626	6	HEX HD CAPSCREW, 1/2-13X1-1/2	
5	8307007	6	LOCKWASHER, 1/2	
6	8305012	4	HEX NUT, 1/2-13	
7	8301456	2	HITCH PIN	
9		2	SERIAL NUMBER/CAPACITY PLATE	
11	7114941	2	LOCK BAR	
12	8305644	2	HEX LOCKNUT, 1/2-13	
13	8307112	2	FLAT WASHER, 1/2 LT	
15		Ref	72” SWING CARRIAGE, (see Figure 3-4 for details)	
			NOTE: ITEM NUMBERS NOT LISTED ARE NOT USED ON THIS FIGURE	

Figure 3-5 Sheet Material Handler

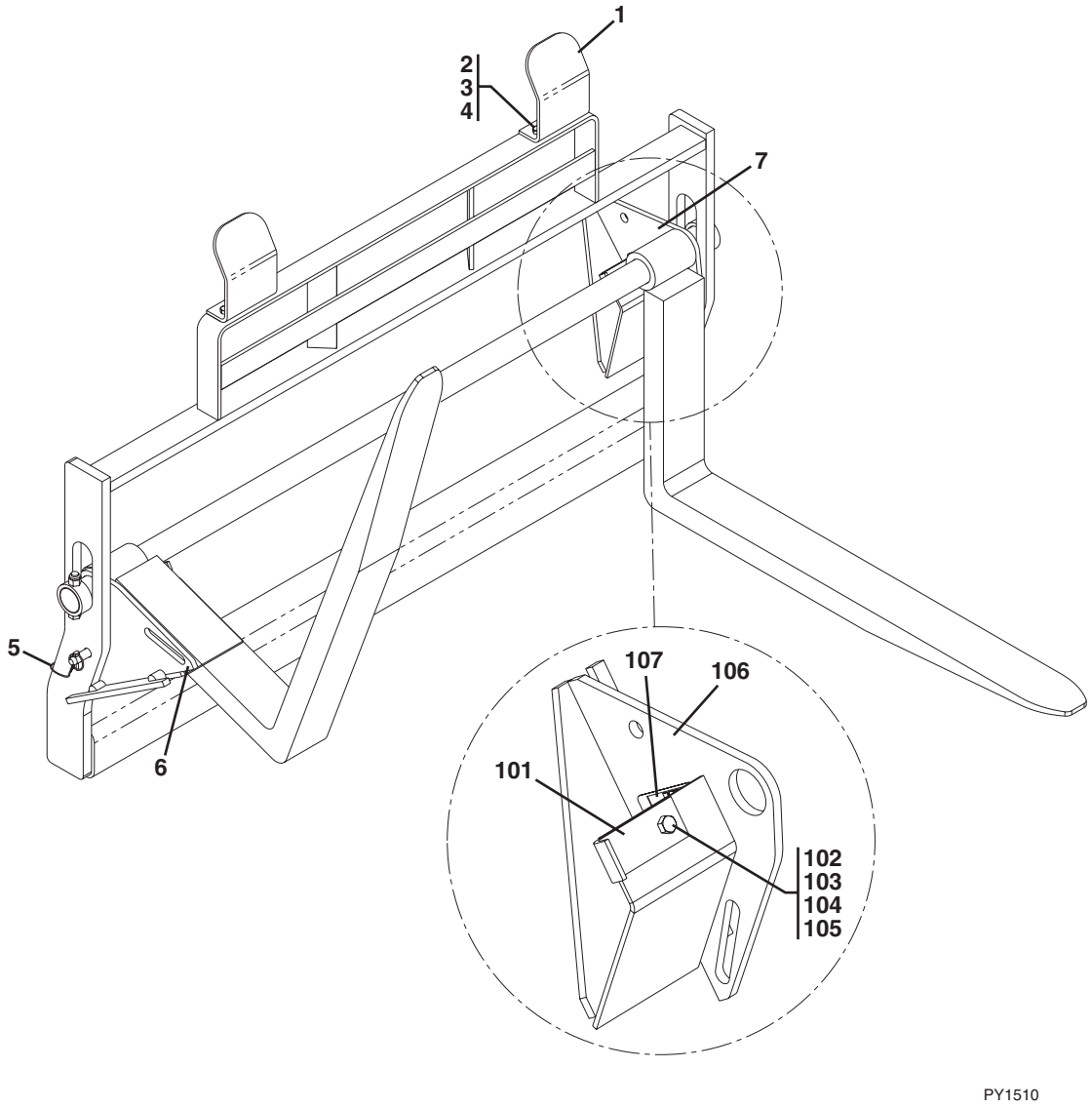

Figure 3-5 Sheet Material Handler

Item	Part Number	Qty.	Description	Rev.
	1001100227	1	SHEET MATERIAL HANDLER ASSY, (includes all items)	A
1	7112642	2	BACKREST EXTENSION	
2	8303626	4	HEX HD CAPSCREW, 1/2-13X1-1/2 GR5	
3	8305012	4	HEX NUT, 1/2-13	
4	8307007	4	LOCK WASHER, 1/2	
5	1001093377	2	HITCH PIN	
6	1001101115	1	FORK SUPPORT ASSY, RH, (includes items 101 thru 107)	A
7	1001101116	1	FORK SUPPORT ASSY, LH, (includes items 101 thru 107)	B
101	7114941	1	LOCK BAR	
102	8303626	1	HEX HD CAPSCREW, 1/2-13X1-1/2 GR5	
103	8305644	1	HEX LOCK NUT, 1/2-13	
104	8307007	4	LOCK WASHER, 1/2	
105	8307112	1	WASHER, 1/2	
106	1001100228	1	FORK SUPPORT, RH (not shown)	
	1001100229	1	FORK SUPPORT, LH (shown)	
107		1	S/N PLATE	
			NOTE: ITEM NUMBERS NOT LISTED ARE NOT USED ON THIS FIGURE	

Figure 3-6 3’ Truss Boom w/Winch

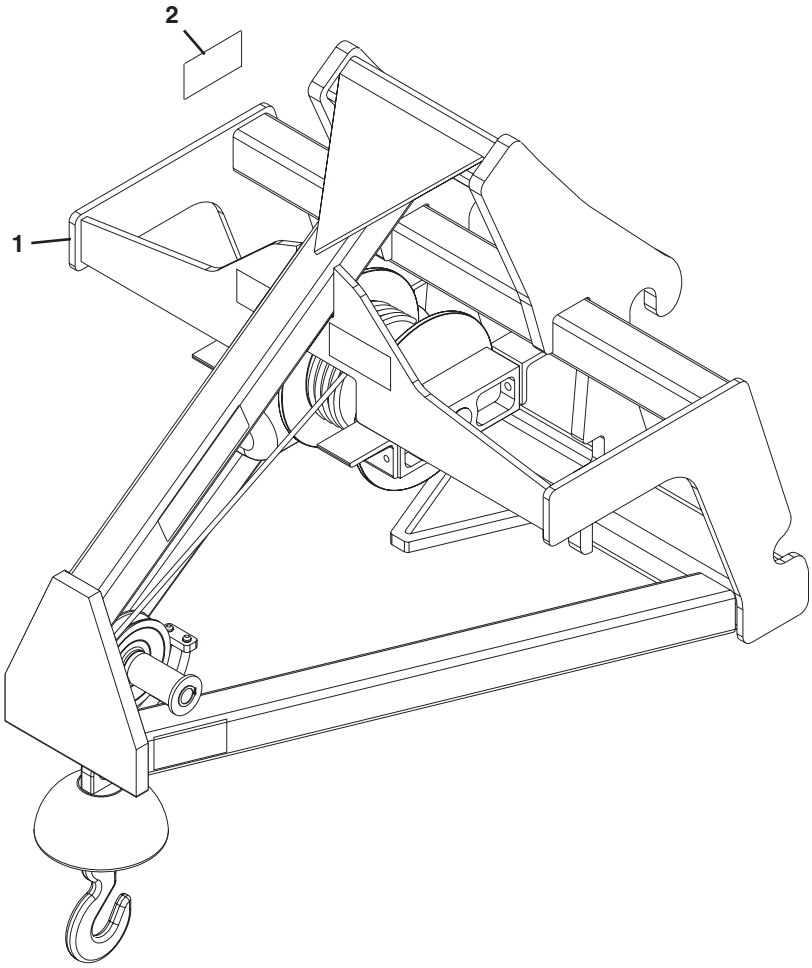

PU1810

Figure 3-6 3’ Truss Boom w/Winch

Item	Part Number	Qty.	Description	Rev.
	7139608	1	3’ TRUSS BOOM w/WINCH, (includes all items), **(644E S/N 17569 thru 20123 & 0160002514 thru 0160034057), (944E S/N 17569 thru 20123 & 0160002514 thru 0160033846)**	G
	1001100967	1	3’ TRUSS BOOM w/WINCH, (includes items 1 & 2), **(644E S/N 0160034058 & After), (944E S/N 0160033847 & After)**	A
1	8380008	1	3’ TRUSS BOOM w/WINCH	
2			SERIAL NUMBER/CAPACITY PLATE	
3	7301040	1	LOAD CHART BOOKLET, (not shown)	

Figure 3-7 10’ Truss Boom w/Winch

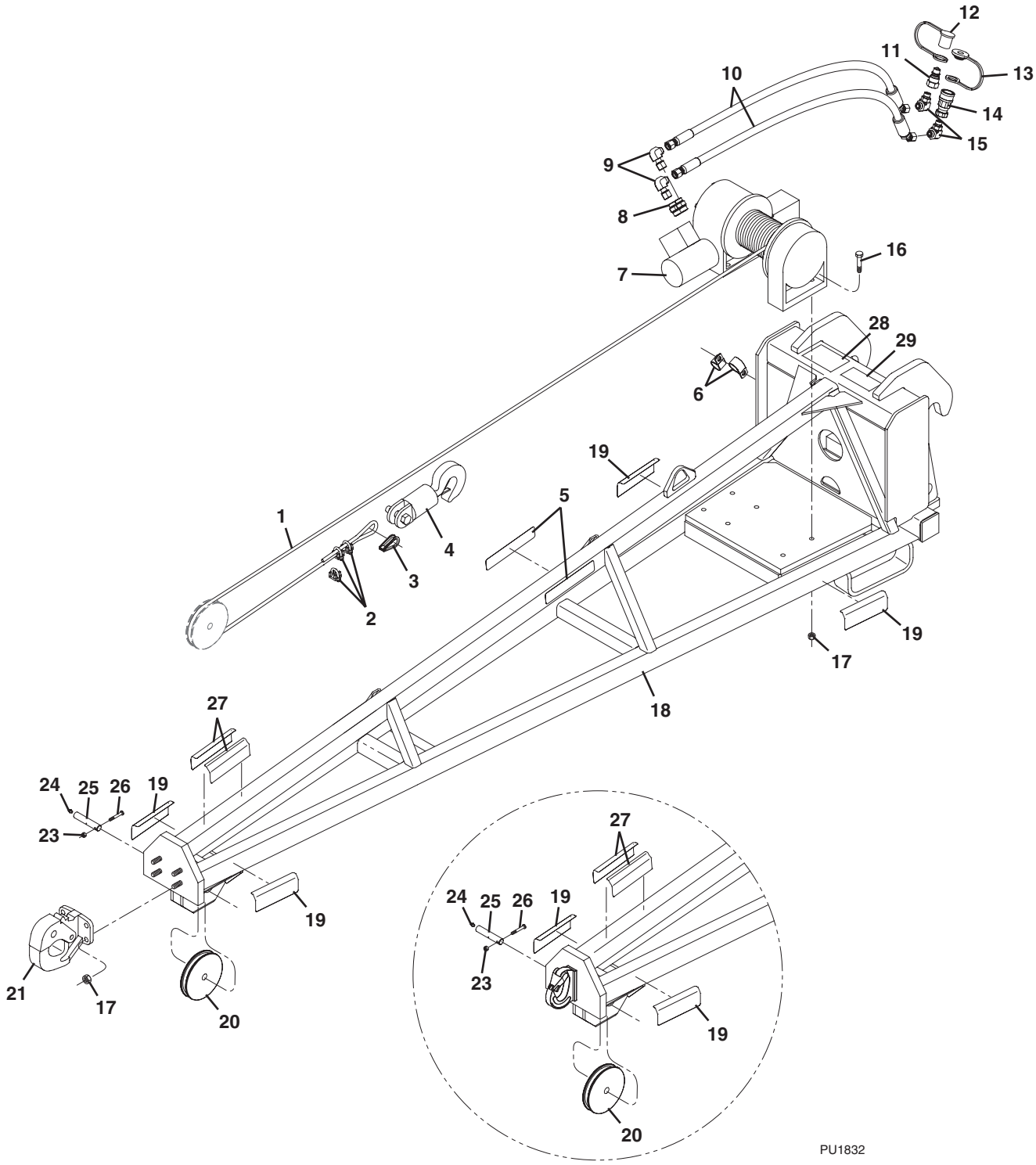

644E - S/N 0160032221 & AFTER
944E - S/N 0160032117 & AFTER

Figure 3-7 10’ Truss Boom w/Winch

Item	Part Number	Qty.	Description	Rev.
	7301179	1	10’ TRUSS BOOM w/WINCH ASSY, (includes all items)	E
1	1012355	1	WIRE ROPE ASSY, 3/8X75	
2	10721557	3	WIRE CLIP, 3/8	
3	10721556	1	THIMBLE, 3/8	
4	10267585	1	HOOK ASSY	
5	4110412	2	CAPACITY DECAL	
6	8406302	2	HOSE CLAMP	
7	10727770	1	HYDRAULIC WINCH w/BRAKE	
	70021573	1	WINCH MOTOR	
8	2110810	2	CONNECTOR	
9	2172108	2	ELBOW, 90 DEGREES, (swivel nut)	
10	2717093	2	HOSE ASSY	
11	91403414	1	QUICK DISCONNECT NIPPLE	
12	8420053	1	DUST CAP, #8	
13	8420055	1	DUST PLUG, #8	
14	91403413	1	QUICK DISCONNECT COUPLER	
15	2130808	2	ELBOW, 90 DEGREES	
16	10700484	6	HEX HD CAPSCREW, 1/2-20X2-1/4, GR8	
17	11419080	10	HEX LOCKNUT, 1/2-20, **(644E Before S/N 0160032221, 944E Before S/N 0160032117)**	
	11419080	6	HEX LOCKNUT, 1/2-20, **(644E S/N 0160032221 & After, 944E S/N 0160032117 & After)**	
18	7301191	1	10’ TRUSS BOOM	
19	4110252	4	PINCH POINT/ENTANGLEMENT HAZARD DECAL	
20	10727327	1	SHEAVE	
21	8382017	1	PINTLE HOOK, **(644E Before S/N 0160032221, 944E Before S/N 0160032221)**	
23	11170040	1	LOCKNUT, 1/4-28	
24	11160110	1	STRAIGHT GREASE FITTING, 1/4-28	
25	10125085	1	PIN	
26	11045080	1	HEX HD CAPSCREW, 1/4-28X2, GR5	
27	4110422	2	DANGER SWINGING LOADS DECAL	
28	4110424	1	HOSE ROUTE WARNING DECAL	
29		1	SERIAL NUMBER PLATE	
			NOTE: ITEM NUMBERS NOT LISTED ARE NOT USED ON THIS FIGURE	

Figure 3-8 12’ Truss Boom w/Winch

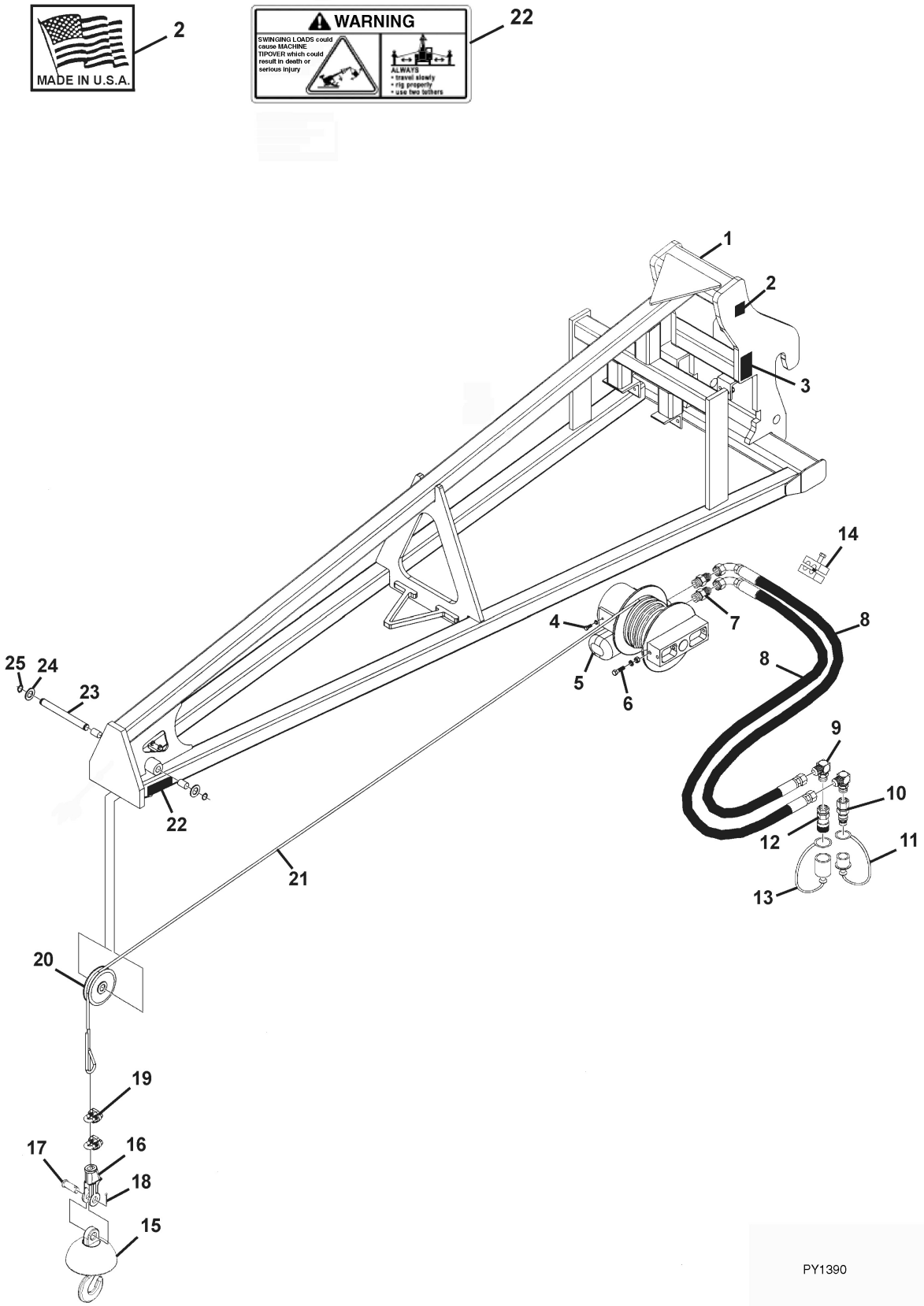

Figure 3-8 12’ Truss Boom w/Winch

Item	Part Number	Qty.	Description	Rev.
	1001099351	1	12’ TRUSS BOOM w/ WINCH, (includes all items)	C
1		1	TRUSS BOOM FRAME	
2	90554016	1	DECAL, MADE IN USA	
3		1	S/N PLATE	
4	70021349	4	HEX HD CAPSCREW, 3/8X1	
	90554042	4	LOCK WASHER, 3/8	
5	70021921	1	TRUSS BOOM WINCH MOTOR	
6		2	HEX HD CAPSCREW, 1/2X1.75	
	90554020	2	LOCK WASHER, 1/2	
	90554054	2	HEX NUT, 1/2	
7	70021415	2	CONNECTOR	
8	70021977	2	HOSE ASSY, 3/8X32	
9		1	ELBOW, 90 DEGREES	
10	7029692	1	MALE QUICK COUPLER	
11	90554062	1	DUST CAP	
12	70021342	1	FEMALE QUICK COUPLER	
13	90554076	1	DUST COVER	
14	70021387	2	CLAMP	
15	70021978	1	BALL SWIVEL W/SAFETY HOOK	
16	70021979	1	SOCKET ASSY	
17		1	PIN	
18		1	COTTER PIN	
19		2	CLAMP	
20	70021935	1	PULLEY	
21	70022028	1	CABLE	
22	4110422	2	DECAL, WARNING SWINGING LOADS	
23		1	PIN	
24		2	FLAT WASHER, 1	
25		2	SNAP RING	

Figure 3-9 10’ Truss Boom

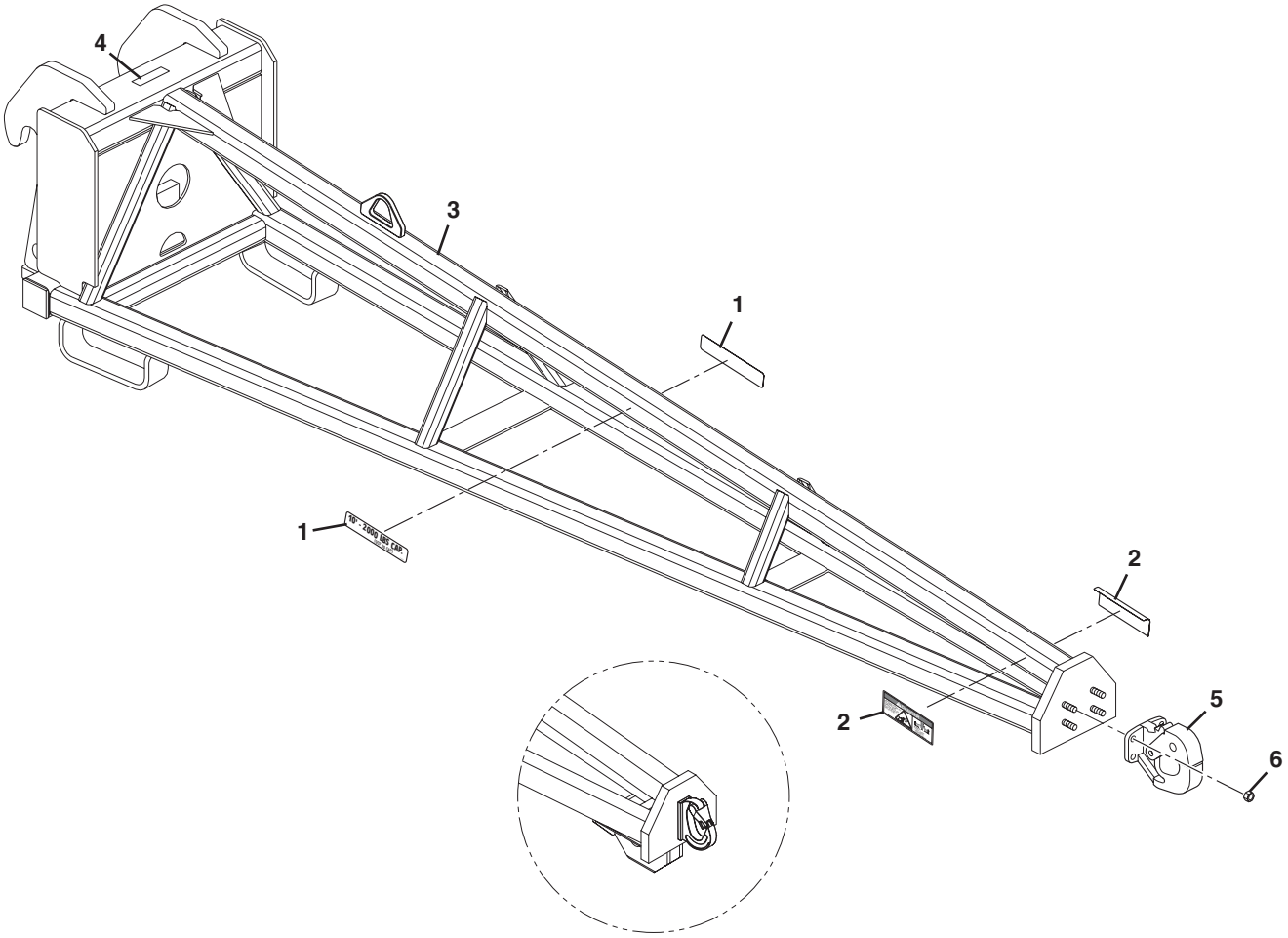

644E - S/N 0160032221 & AFTER
944E - S/N 0160032117 & AFTER

Figure 3-9 10’ Truss Boom

Item	Part Number	Qty.	Description	Rev.
	7301178	1	10’ TRUSS BOOM ASSY, (includes items 1 thru 4)	C
1	4110412	2	CAPACITY DECAL	
2	4110422	2	DANGER DECAL	
3	7301289	1	10’ TRUSS BOOM	
4		1	SERIAL NUMBER PLATE	
5	8382017	1	PINTLE HOOK, **(644E Before S/N 0160032221, 944E Before S/N 0160032221)**	
6	11419080	10	HEX LOCKNUT, 1/2-20, **(644E Before S/N 0160032221, 944E Before S/N 0160032117)**	
	11419080	6	HEX LOCKNUT, 1/2-20, **(644E S/N 0160032221 & After, 944E S/N 0160032117 & After)**	

Figure 3-10 12’ & 15’ Truss Boom

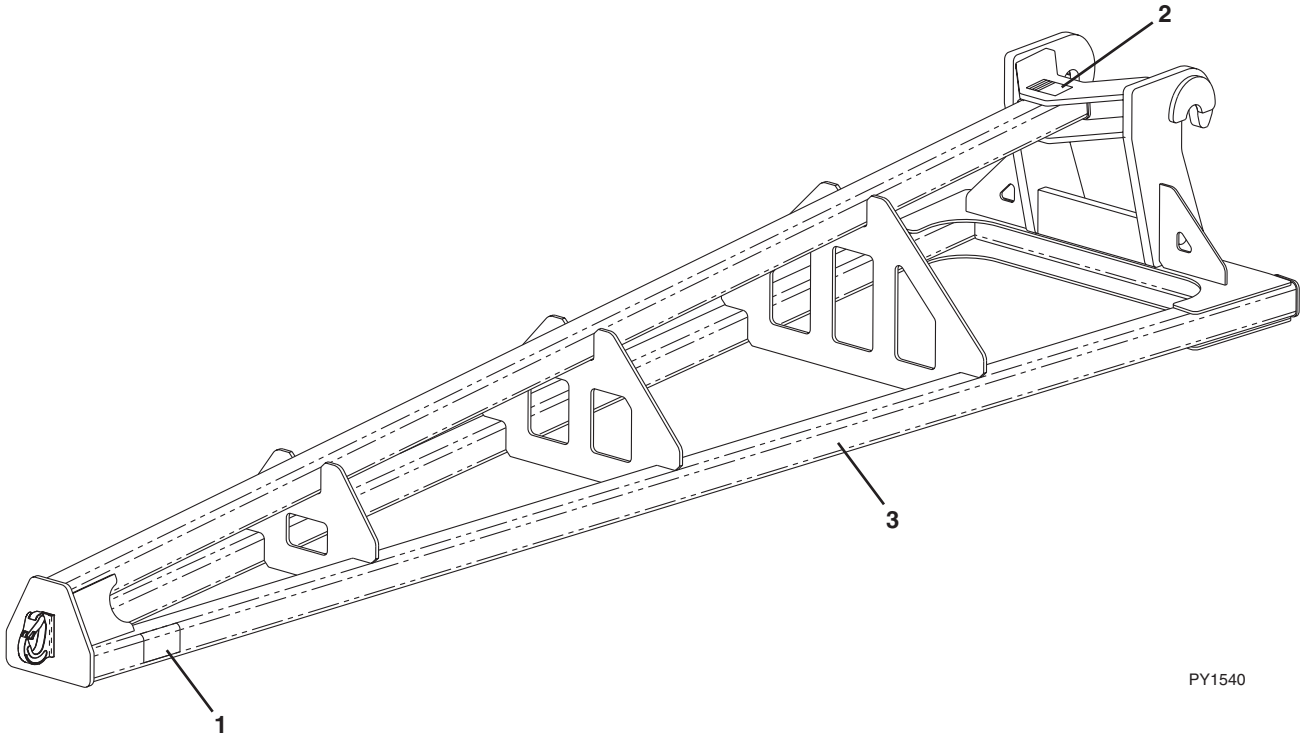

Figure 3-10 12’ & 15’ Truss Boom

Item	Part Number	Qty.	Description	Rev.
	1001099902	1	12’ TRUSS BOOM, (includes all items)	
	1001099901	1	15’ TRUSS BOOM, (includes all items)	
1	4110422	2	DECAL, WARNING SWINGING LOADS	
2		1	S/N PLATE	
3		1	TRUSS BOOM	

Figure 3-11 50” Single Fork Positioning Carriage Assembly

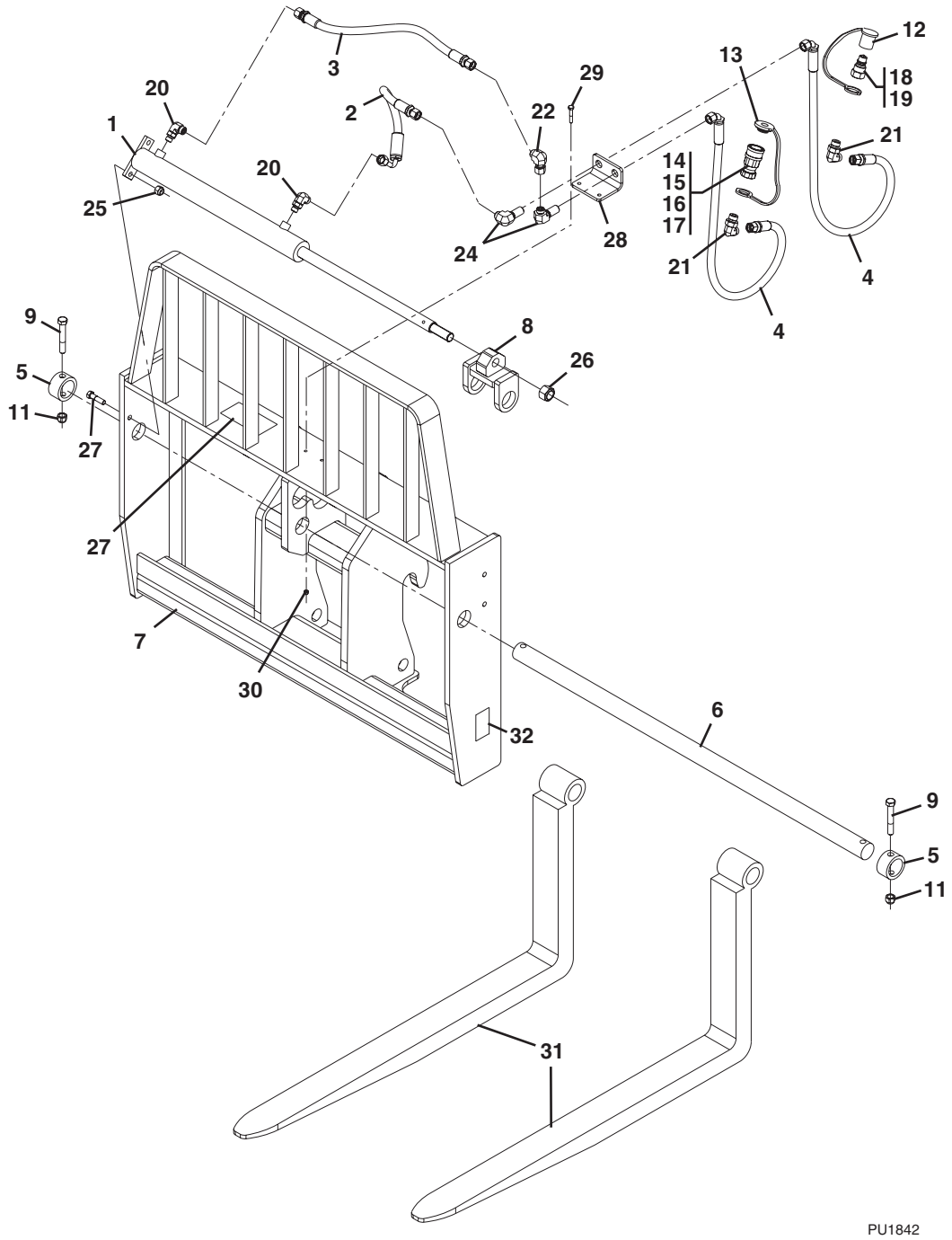

Figure 3-11 50” Single Fork Positioning Carriage Assembly

Item	Part Number	Qty.	Description	Rev.
	7301294	1	50" CARRIAGE FORK POSITIONING, (includes all items)	C
	7301726	1	50" CARRIAGE FORK POSITIONING ASSY, (includes items 1 thru 30)	F
1	2717283	1	50" CARRIAGE FORK POSITIONING CYLINDER	
	8036733	1	SEAL KIT	
2	2717160	1	HOSE ASSY	
3	2717161	1	HOSE ASSY	
4	2717162	2	HOSE ASSY	
5	90200003	2	LOCKING HUB	
6	90451058	1	FORK SHAFT	
7	7301569	1	50" CARRIAGE WELDMENT	
8	7301579	1	FORK ADAPTER WELDMENT	
9	8303634	2	HEX HD CAPSCREW, 5/8-11X4, GR5	
10	8303658	2	HEX HD CAPSCREW, 1/2-13X2, GR5	
11	8305643	2	HEX NUT, 5/8-11	
12	8420053	1	DUST CAP	
13	8420055	1	DUST PLUG	
14	91403413	1	FEMALE QUICK DISCONNECT, (includes items 15 thru 17)	
15	8640029	1	NOSE SEAL	
16	8640028	1	COUPLER BODY SEAL	
17	8640032	1	COUPLER BODY SEAL BACK UP RING	
18	91403414	1	MALE QUICK DISCONNECT, (includes item 19)	
19	8640029	1	NOSE SEAL	
20	2130606	2	ELBOW, 90 DEGREES	
21	2130608	2	ELBOW, 90 DEGREES	
22	2172106	1	ELBOW, 90 DEGREES, (swivel nut)	
24	2171206	2	ELBOW, 90 DEGREES	
25	8310302	2	HEX LOCKNUT	
26	10705034	1	HEX LOCKNUT	
27	4110473	1	ROUTE HOSE WARNING DECAL	
28	7301578	1	BULKHEAD PLATE	
29	8303743	2	HEX HD CAPSCREW, 1/4-20X1.5, GR5	
30	8305624	2	HEX LOCKNUT, 1/4-20	
31	7301408	2	PALLET FORK, 60X100X1220mm	
32		1	SERIAL NUMBER PLATE	
			NOTE: ITEM NUMBERS NOT LISTED ARE NOT USED ON THIS FIGURE	

Figure 3-12 50” Dual Fork Positioning Carriage Assembly

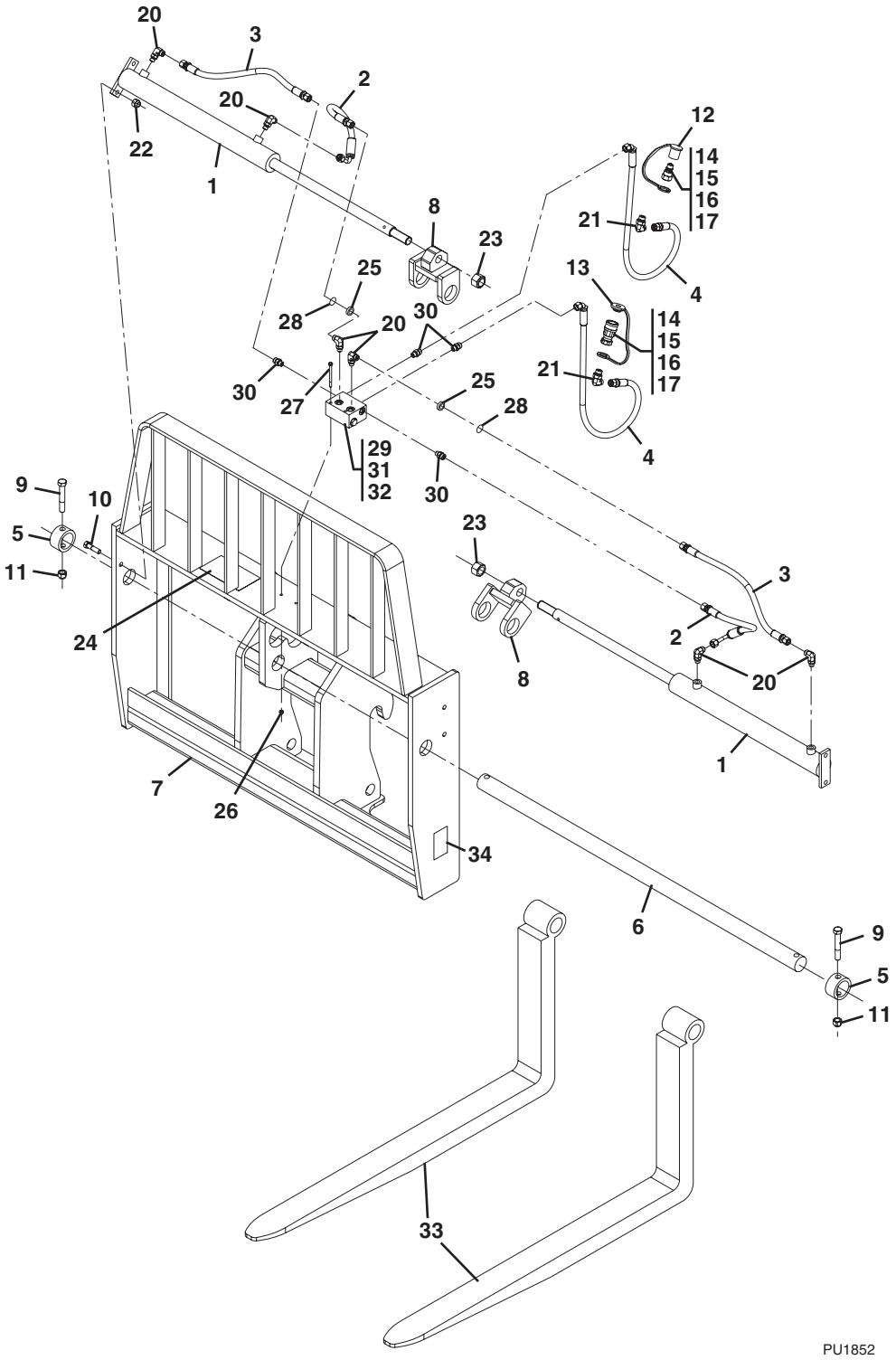

Figure 3-12 50” Dual Fork Positioning Carriage Assembly

Item	Part Number	Qty.	Description	Rev.
	7301295	1	50” DUAL FORK POSITIONING CARRIAGE ASSY, (includes all items)	C
	7301568	1	50” DUAL FORK POSITIONING CARRIAGE ASSY, (includes items 1 thru 32)	G
1	2717283	2	FORK POSITIONING CYLINDER	
	8036733	1	SEAL KIT	
2	2717160	2	HOSE ASSY	
3	2717161	2	HOSE ASSY	
4	2717162	2	HOSE ASSY	
5	90200003	2	LOCKING HUB	
6	90451058	1	FORK SHAFT	
7	7301569	1	50" CARRIAGE WELDMENT	
8	7301579	2	FORK ADAPTER WELDMENT	
9	8303634	2	HEX HD CAPSCREW, 5/8-11X4, GR5	
10	8303658	4	HEX HD CAPSCREW, 1/2-13X2, GR5	
11	8305643	2	HEX LOCKNUT, 5/8-11	
12	8420053	1	DUST CAP	
13	8420055	1	DUST PLUG	
14	91403413	1	FEMALE QUICK DISCONNECT, (includes items 15 thru 17)	
15	8640029	1	NOSE SEAL	
16	8640028	1	COUPLER BODY SEAL	
17	8640032	1	COUPLER BODY SEAL BACK UP RING	
18	91403414	1	MALE QUICK DISCONNECT, (includes item 19)	
19	8640029	1	NOSE SEAL	
20	2130606	6	ELBOW, 90 DEGREES	
21	2130608	2	ELBOW, 90 DEGREES	
22	8310302	4	HEX LOCKNUT, 1/2-13	
23	10705034	2	HEX LOCKNUT	
24	4110473	1	HOSE ROUTE WARNING DECAL	
25	7139918	2	DISC ORIFICE	
26	8305624	2	HEX LOCKNUT, 1/4-20	
27	8310435	2	HEX HD CAPSCREW, 1/4-20X3-1/4, GR5	
28	8630003	2	O-RING	
29	4641502	1	VALVE ASSY, (Includes items 30 thru 32)	
30	2110606	4	ADAPTER	
31	4641501	1	VALVE BODY	
32	2130606	2	CONNECTOR	
33	7301408	2	PALLET FORK, 60X100X1220mm	
34		1	SERIAL NUMBER PLATE	

Figure 3-13 Fork Mounted Lifting Hook

NOTE: PALLET/LUMBER FORKS OF AN APPROPRIATE LOAD RATING MUST BE USED.

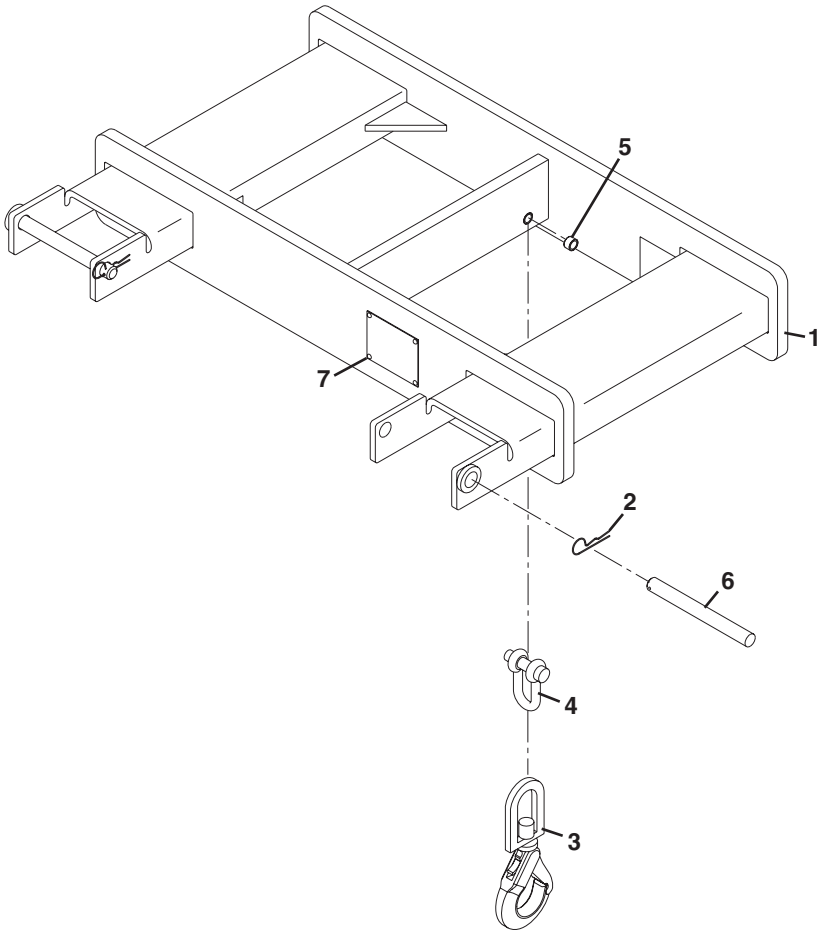

PH4610

Figure 3-13 Fork Mounted Lifting Hook

Item	Part Number	Qty.	Description	Rev.
1	91565094	1	FORK MOUNTED LIFTING HOOK, (includes all items)	C
2	7029520	2	HAIRPIN CLIP	
3	90554080	1	SLING HOOK	
4	7029521	1	CHAIN SHACKLE, 12,000LB	
5	7029522	1	SPRING BUSHING	
6	1001093171	2	PIN	
7		1	S/N ATTACHMENT PLATE	

Figure 3-14 Forks

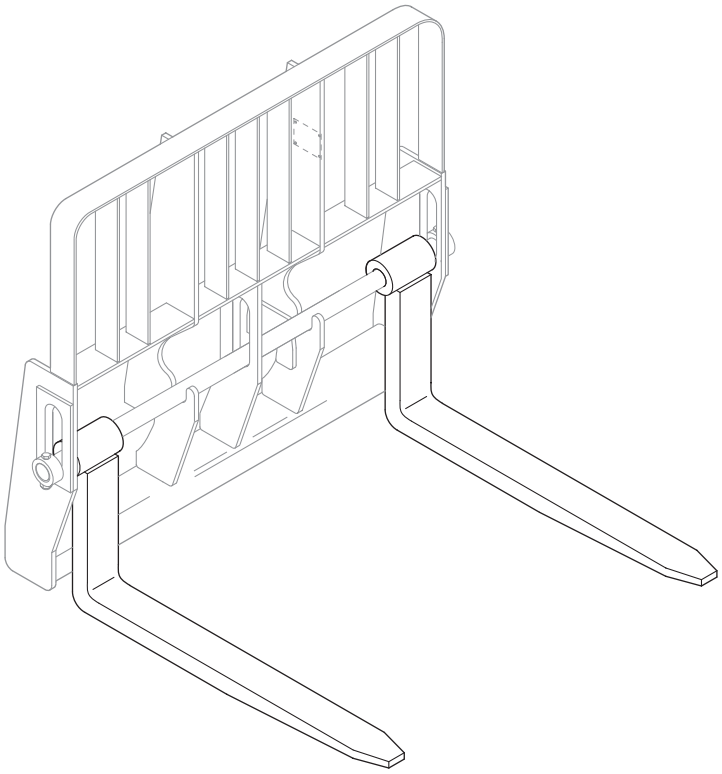

PV1550

Figure 3-14 Forks

Item	Part Number	Qty.	Description	Rev.
	7097523	2	PALLET FORK, 48X4X2, (4,000 lb. rating ea. fork)	
	7162000	2	PALLET FORK, 48X4X2.36, (5,000 lb. rating ea. fork)	
	7301408	2	PALLET FORK, 48X4X2.36, (5,000 lb. rating ea. fork)	
	7160900	2	LUMBER FORK, 60X 7X1.75, (5,000 lb. rating ea. fork)	
	7139746	2	LUMBER FORK, 60X 7X1.75, (5,000 lb. rating ea. fork)	
	7161000	6	CUBING FORK, 48X2X2, (2,000 lb. rating ea. fork)	
	7139747	6	CUBING FORK, 48X2X2, (2,000 lb. rating ea. fork)	
	2340037	6	CUBING FORK, 48X2X2, (1,940 lb. rating ea. fork)	
	2340045	2	PALLET FORK, 48X4X2.36, (5,475 lb. rating ea. fork)	
	2340038	2	PALLET FORK, 48X5X2.36, (6,850 lb. rating ea. fork)	
	2340039	2	DUAL TAPER FORK, 60X6X2.36, (8,150 lb. rating ea. fork)	
	2340046	2	DUAL TAPER FORK, 60X7X1.75, (5,400 lb. rating ea. fork)	
	1001092391	2	DUAL TAPER FORK, 72X6X2, (5,650 lb. rating ea. fork)	
			NOTE: FORKS RATED LESS THAN THE ATTACHMENT OR MACHINE'S CAPACITY DECREASES CAPACITY OF THE ATTACHMENT OR MACHINE TO THAT OF THE FORKS. FORKS RATED MORE THAN THE ATTACHMENT OR MACHINE'S CAPACITY DO NOT INCREASE ATTACHMENT OR MACHINE'S CAPACITY.	
			NOTE: PLEASE CONSULT JLG PARTS DEPARTMENT TO DETERMINE THE CORRECT FORKS APPLICABLE TO YOUR SPECIFIC CARRIAGE ASSY & APPLICATION.	

Figure 3-15 Fork Mounted Platform

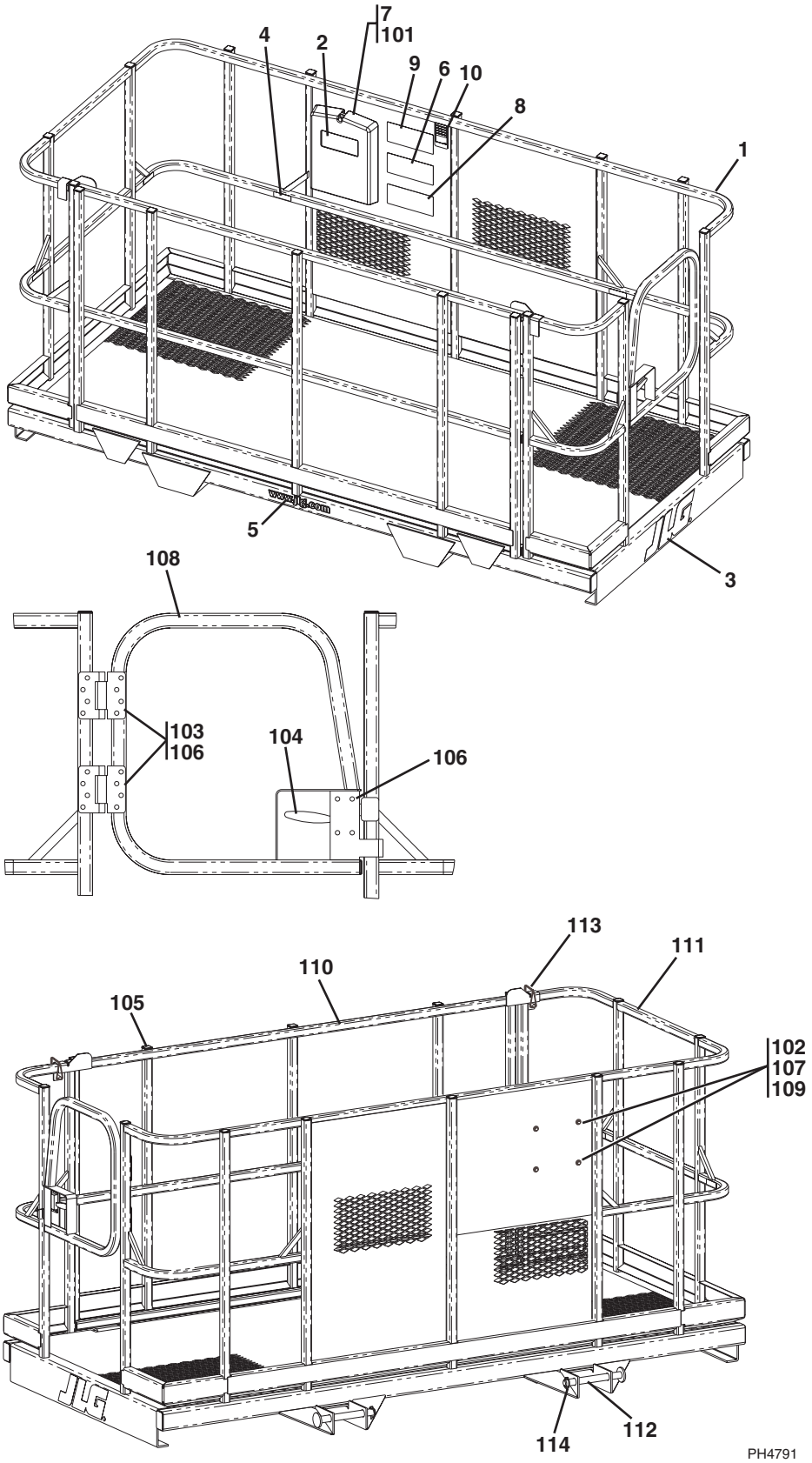

Figure 3-15 Fork Mounted Platform

Item	Part Number	Qty.	Description	Rev.
	1001092280	1	FORK MOUNTED PLATFORM - ENGLISH, (includes all items)	C
	1001096306	1	FORK MOUNTED PLATFORM - ISO, (includes all items)	A
	1001097072	1	FORK MOUNTED PLATFORM - FRENCH, (includes all items)	A
1	1001096904	1	FORK MOUNTED PLATFORM, (includes items 101 thru 114)	A
2	1701509	1	MANUAL DECAL	
3	1702773	2	JLG DECAL	
4	1704277	8	LANYARD ATTACHING DECAL	
5	1704885	1	WEBSITE DECAL	
6	1706892	1	PLATFORM WARNING DECAL - ENGLISH	
	1001096025	1	PLATFORM WARNING DECAL - ISO	
	1001096024	1	PLATFORM WARNING DECAL - FRENCH	
7	31200160	1	OPERATION & SAFETY MANUAL - ENGLISH	
	31200336	1	OPERATION & SAFETY MANUAL - FRENCH	
	31200388	1	OPERATION & SAFETY MANUAL - PORTUGUESE	
	31200387	1	OPERATION & SAFETY MANUAL - SPANISH	
8	1001092481	1	ATTACHMENT WARNING DECAL - ENGLISH	
	1001096021	1	ATTACHMENT WARNING DECAL - ISO	
	1001096019	1	ATTACHMENT WARNING DECAL - FRENCH	
9	1001092482	1	CAPACITY DECAL - ENGLISH	
	1001096023	1	CAPACITY DECAL - ISO	
	1001096020	1	CAPACITY DECAL - FRENCH	
10		1	SERIAL NUMBER PLATE	
101	0860520	1	MANUAL STORAGE BOX	
102	2080044	4	RIVNUT FASTENER 1/4-20	
103	2600281	2	HINGE	
104	2940074	1	LATCH	
105	3520198	21	PLUG	
106	3820020	20	POP RIVET	
107	4751400	4	WASHER, 1/4	
108	4846452	1	GATE WELDMENT	
109	80263012	4	SCREW WHIZ LOCK 1/4-20 X 1/2	
110	1001093140	1	GATE WELDMENT	
111	1001093141	1	BASE WELDMENT	
112	1001093171	2	PIN	
113	1001097168	2	PIN, SAFETY SNAP, w/LANYARD	
114	1001098582	2	LYNCH PIN 3/16 w/LANYARD	
			NOTE: ITEM NUMBERS NOT LISTED ARE NOT USED ON THIS FIGURE	

Figure 3-15 Fork Mounted Platform

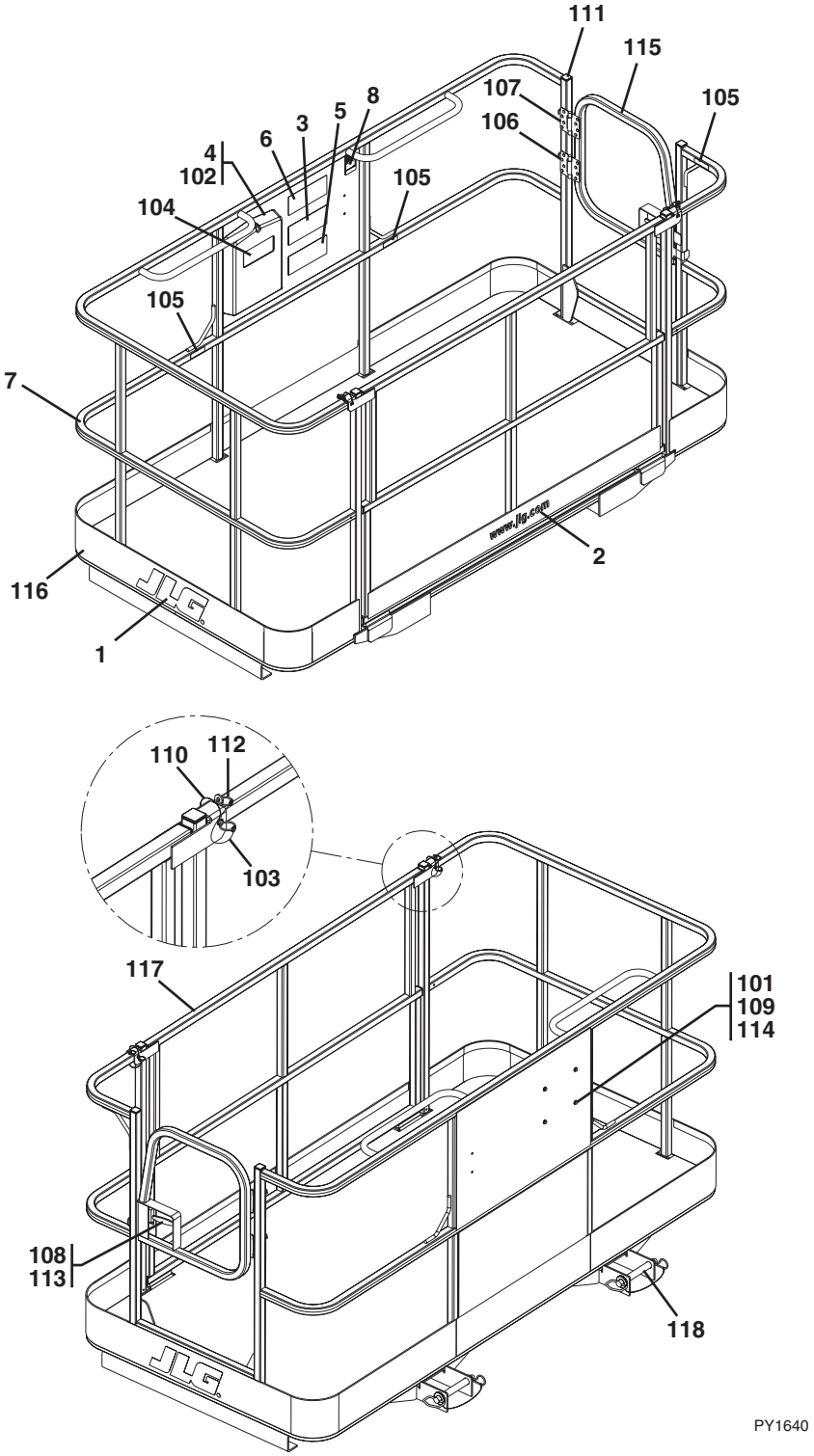

Figure 3-15 Fork Mounted Platform

Item	Part Number	Qty.	Description	Rev.
	1001103637	1	FORK MOUNTED PERSONNEL PLATFORM, ASME, (includes all items)	A
	1001103730	1	FORK MOUNTED PERSONNEL PLATFORM, ISO, (includes all items)	A
	1001103736	1	FORK MOUNTED PERSONNEL PLATFORM, FRENCH, (includes all items)	A
1	1702773	2	DECAL, JLG	
2	1704885	1	DECAL, WEBSITE	
3	1706892	1	DECAL, PLATFORM WARNING (English)	
	1001096025	1	DECAL, PLATFORM WARNING (ISO)	
	1001096024	1	DECAL, PLATFORM WARNING (French)	
4	31200160	1	OPERATION & SAFETY MANUAL (English)	
	31200387	1	OPERATION & SAFETY MANUAL (Spanish)	
	31200388	1	OPERATION & SAFETY MANUAL (Portuguese)	
	31200336	1	OPERATION & SAFETY MANUAL (French)	
5	1001092481	1	DECAL, WARNING (English)	
	1001096021	1	DECAL, WARNING (ISO)	
	1001096019	1	DECAL, WARNING (French)	
6	1001092482	1	DECAL, CAPACITY (English)	
	1001096023	1	DECAL, CAPACITY (ISO)	
	1001096020	1	DECAL, CAPACITY (French)	
7	1001096162	1	FORK MOUNTED PLATFORM, (includes items 101 thru 118)	A
8		1	S/N PLATE	
101	0641405	4	HEX HD CAPSCREW, 1/4-20X5/8	
102	0860520	1	MANUAL STORAGE BOX	
103	1060379	2	LANYARD CABLE	
104	1701509	1	DECAL, MANUAL	
105	1704277	3	DECAL, LANYARD ATTACH	
106	2080040	16	FASTENER	
107	2600281	2	HINGE	
108	2940074	1	LATCH	
109	3311401	4	HEX NUT, 1/4-20	
110	3421453	2	PIN	
111	3520072	10	PLUG	
112	3760170	4	RING	
113	3820020	4	RIVET	
114	4711400	8	WASHER, 1/4	
115	4846452	1	GATE WELDMENT	
116		1	PLATFORM	
117	1001095810	1	GATE WELDMENT	
118	1001102813	2	HITCH PIN	
			NOTE: ITEM NUMBERS NOT LISTED ARE NOT USED ON THIS FIGURE	

Figure 3-16 Concrete Bucket

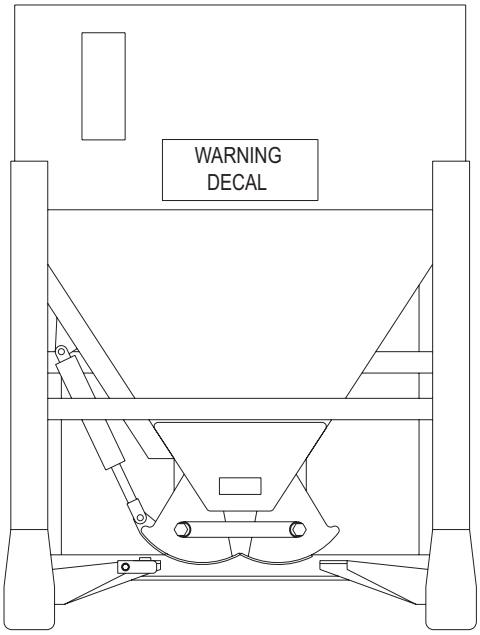

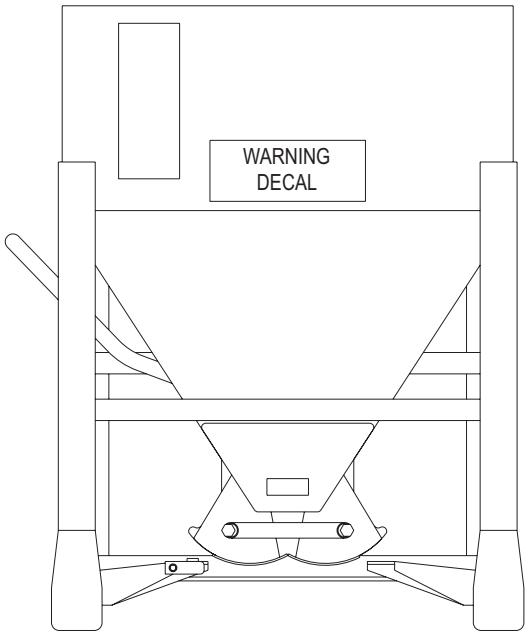

PH4740

Figure 3-16 Concrete Bucket

Item	Part Number	Qty.	Description	Rev.
1	8866441	1	CONCRETE BUCKET, 1 CU. YD., HYDRAULIC, **(10042/10054),** (includes item 2)	B
2		1	SERIAL NUMBER PLATE	
3	8866442	1	CONCRETE BUCKET, 1/2 CU. YD., HYDRAULIC, (includes item 4)	B
4		1	SERIAL NUMBER PLATE	
5	8866443	1	CONCRETE BUCKET, 1 CU. YD., MANUAL, **(10042/10054)**, (includes item 6)	B
6		1	SERIAL NUMBER PLATE	
7	8866444	1	CONCRETE BUCKET, 1/2 CU. YD., MANUAL, (includes item 8)	B
8		1	SERIAL NUMBER PLATE	
	8866446	1	4” DISCHARGE HOSE, (not shown)	
	8866561	1	4” DISCHARGE HOSE W/GATE, (not shown)	
	8866464	1	6” DISCHARGE HOSE, (not shown)	
	8866560	1	8” DISCHARGE HOSE, (not shown)	
	8866445	1	RUBBER SIDE DISCHARGE CHUTE, (not shown)	

Figure 3-17 Sweeper Assembly

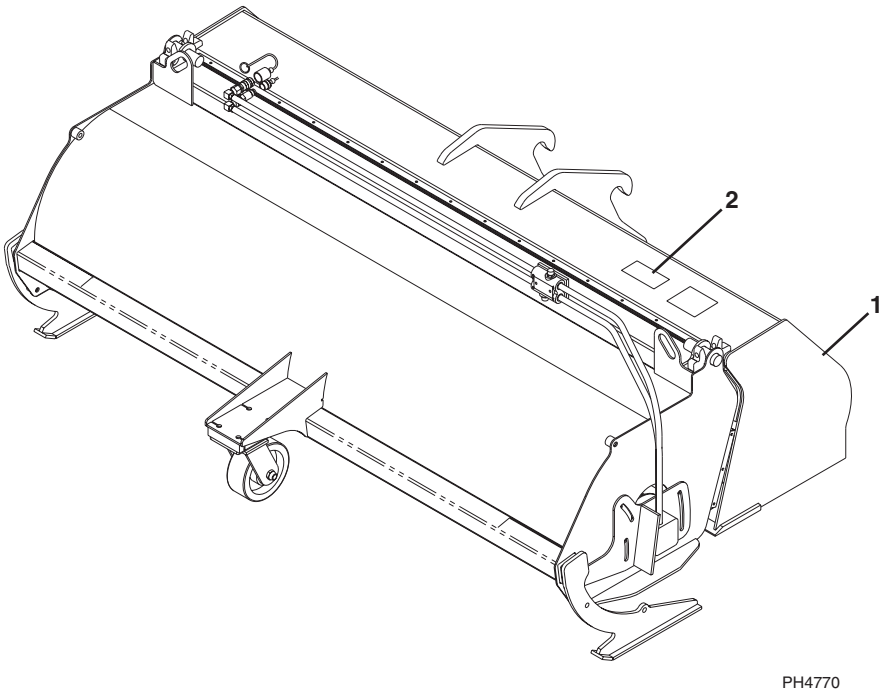

Figure 3-17 Sweeper Assembly

Item	Part Number	Qty.	Description	Rev.
	7301180	1	SWEEPER ASSY, (includes all items)	B
1	7301718	1	24” SWEEPER W/BUCKET	
2		1	S/N PLATE	
4	4110461	1	WARNING DECAL, (Not shown)	
			NOTE: ITEM NUMBERS NOT LISTED ARE NOT USED ON THIS FIGURE	

Figure 3-18 Grapple Bucket

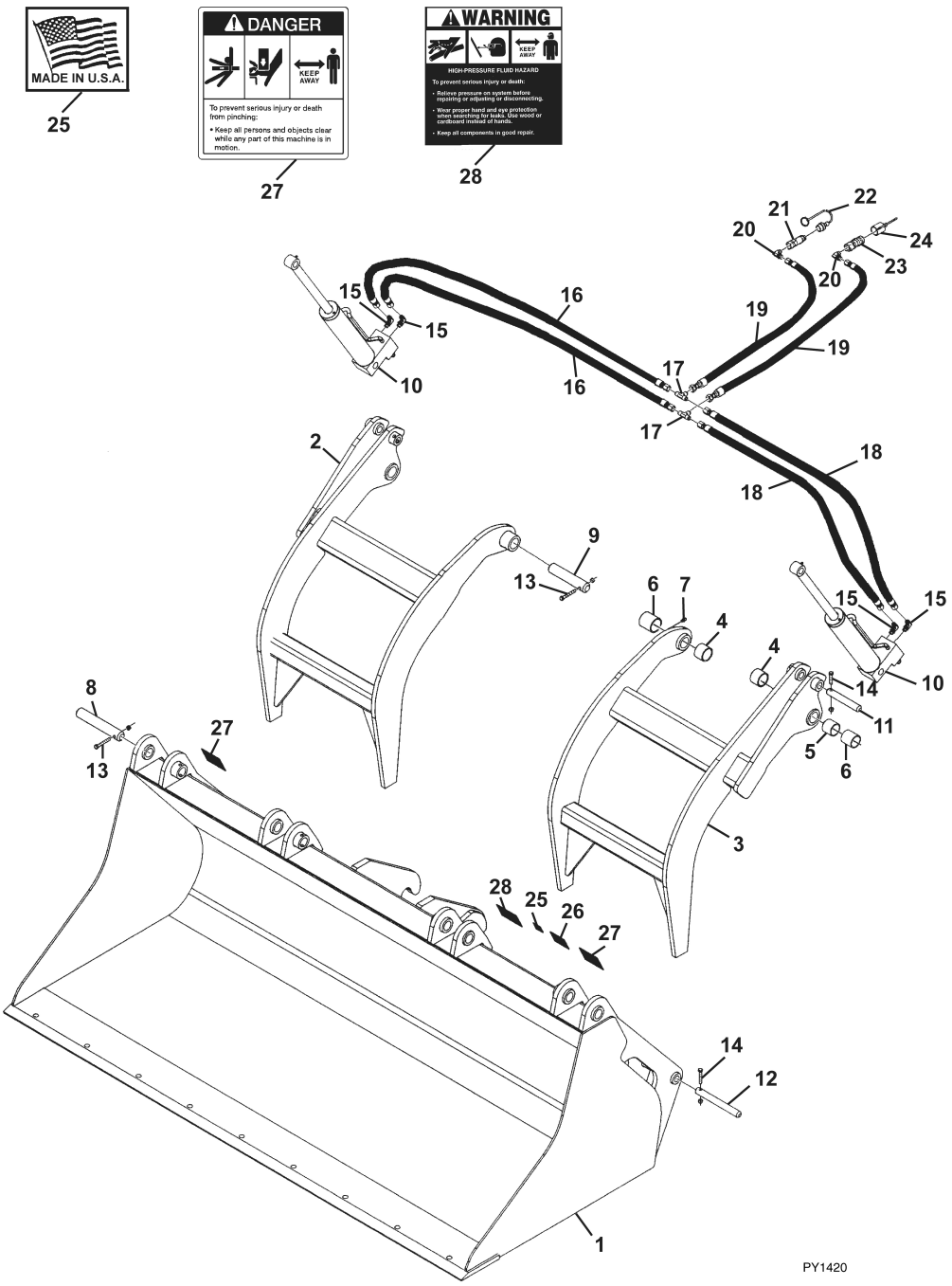

Figure 3-18 Grapple Bucket

Item	Part Number	Qty.	Description	Rev.
	0930020	1	GRAPPLE BUCKET, (includes all items)	
1		1	BUCKET	
	70021387	4	HOSE CLAMP	
2	70021391	1	RIGHT GRAPPLE HOOK	
3	70021392	1	LEFT GRAPPLE HOOK	
4	70021358	4	BUSHING	
5	70021359	2	SPACER	
6	70021360	4	BUSHING	
7	7029714	4	GREASE FITTING	
8	70021361	2	OUTER PIVOT PIN	
9	70021362	2	INNER PIVOT PIN	
10		Ref	CYLINDER ASSY, (see Figure 9-22 for details)	
11	70021364	2	PIN	
12	70021365	2	PIN	
13	70021366	4	HEX HD CAPSCREW, 3/8X2.75	
	70021367	4	LOCK NUT, 3/8	
14	70021399	4	HEX HD CAPSCREW, 3/8X2.25	
	70021367	4	LOCK NUT, 3/8	
15	70021375	4	ELBOW, 90 DEGREES	
16	70021980	2	HOSE ASSY, 3/8X73”	
17	70020562	2	FITTING, TEE	
18	70021981	2	HOSE ASSY, 3/8X46”	
19	70021982	2	HOSE ASSY, 3/8X34”	
20		2	ELBOW, 90 DEGREES	
21	7029692	1	MALE QUICK COUPLER	
22	90554062	1	DUST COVER	
23	70021342	1	FEMALE QUICK COUPLER	
24	90554076	1	DUST COVER	
25	90554016	1	DECAL, MADE IN USA	
26		1	S/N PLATE	
27	90554017	2	DECAL, DANGER PINCH POINT	
28	90554018	1	DECAL, WARNING HIGH PRESSURE	

Figure 3-19 Fork Pin Lock Installation

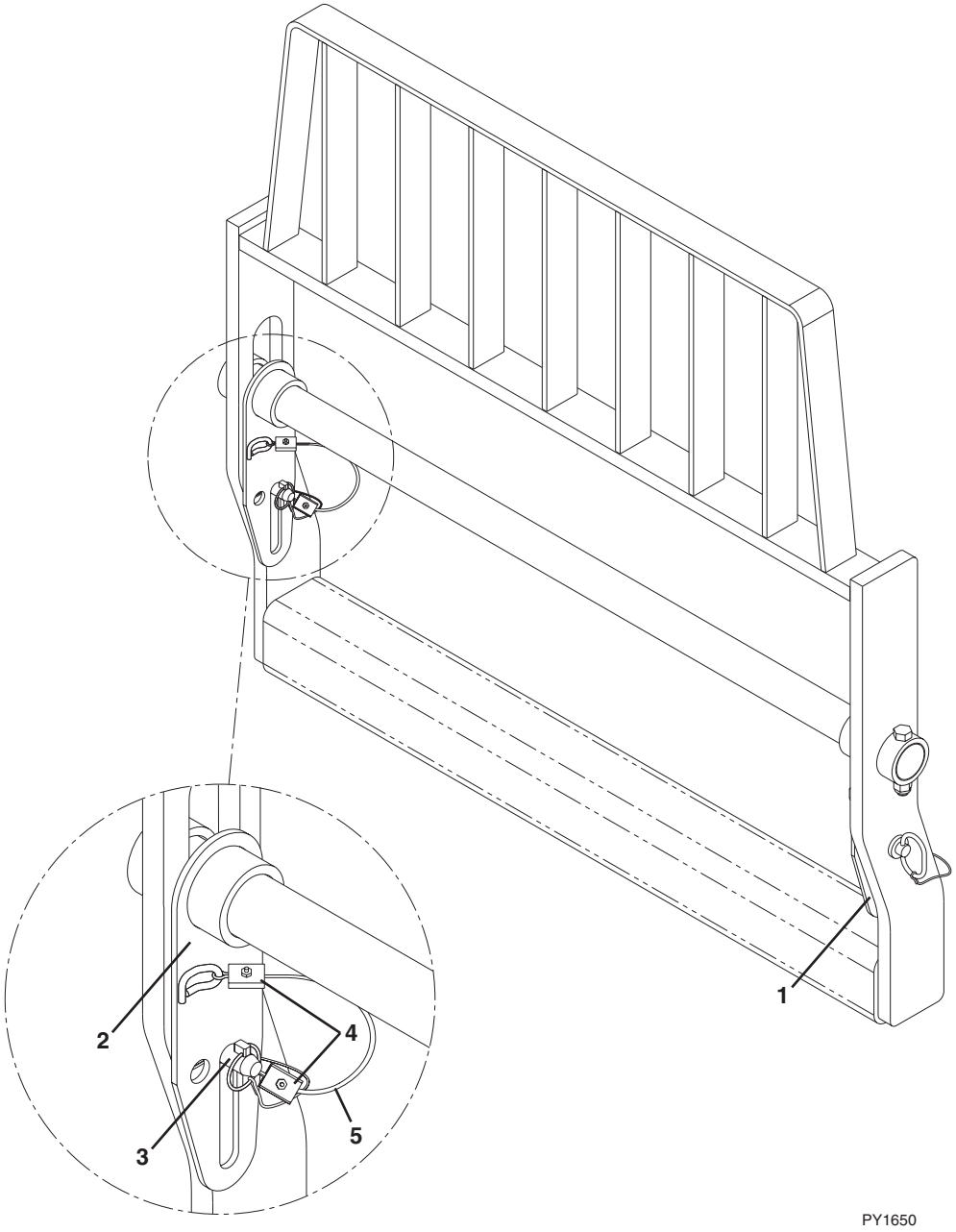

Figure 3-19 Fork Pin Lock Installation

Item	Part Number	Qty.	Description	Rev.
	1001093465	1	FORK PIN LOCK INSTALLATION (includes all items)	
1	0240156	1	FORK PIN LOCK, LH	
2	1001093273	1	FORK PIN LOCK, RH	
3	1001093377	2	HITCH PIN	
4	1001094830	4	CLAMP	
5	1001094330	2	LANYARD	

This Page Intentionally Left Blank

SECTION 4
ENGINE & ATTACHING PARTS

Figure 4-1 Engine Mounting

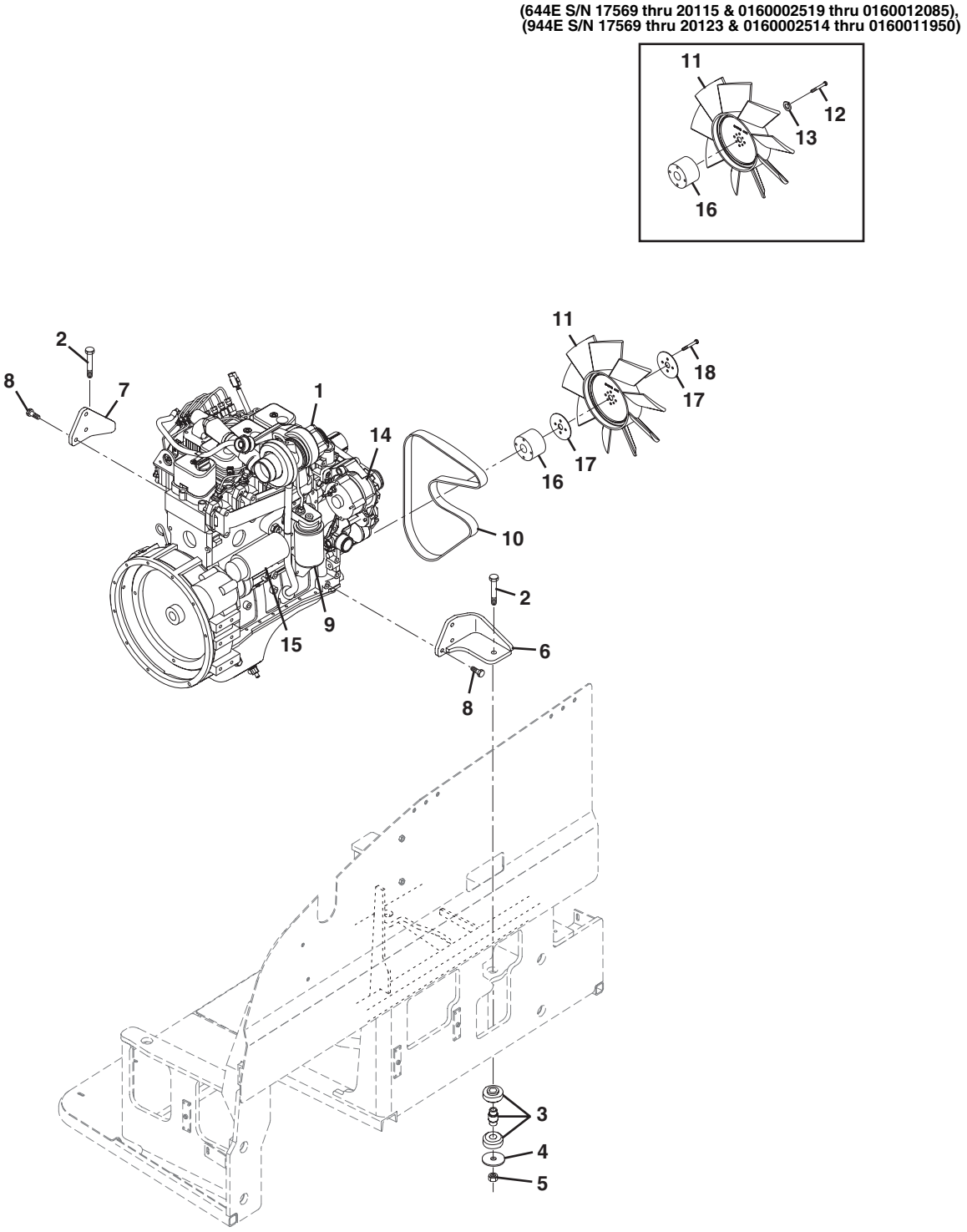

Figure 4-1 Engine Mounting

Item	Part Number	Qty.	Description	Rev.
1	8262161	1	CUMMINS ENGINE, 4BT 3.9 EPA, (TIER I), **(644E S/N 17569 thru 20115, excluding 19557 & 0160002519 thru 0160003672, excluding 0160003489)**	
	8262167	1	CUMMINS ENGINE, B4.5T EPA, (TIER II), **(644E S/N 0160003690 & After including 0160003489, 19557 & 20118)**	
	8262162	1	CUMMINS ENGINE, QSB4.5T EPA, (TIER II), (944E)	
	70020367	1	RELAY, 12V	
	7029829	1	ENGINE HEATER CABLE	
	7029830	1	ENGINE HEATER	
	7029831	1	TEMPERATURE SENDER	
	7029991	1	TRANSFER FUEL PUMP	
2	8310288	4	HEX HD CAPSCREW, 5/8-11X3-3/4, GR8	
3	8278040	4	ENGINE ISOLATOR	
4	7300435	4	REBOUND WASHER	
5	8305643	4	HEX LOCKNUT, 3/4-11	
6	7300447	1	ENGINE MOUNTING INSIDE REAR BRACKET	
7	7300446	1	ENGINE MOUNTING OUTSIDE REAR BRACKET	
8	8303790	6	HEX HD CAPSCREW, M12-1.75X30mm, PC8.8	
9	8320275	1	ENGINE OIL FILTER	
10	8036605	1	FAN BELT	
11	8272031	1	21” FAN, (must be used w/item 16)	
12		4	HEX HD CAPSCREW, M10-1.5X75mm, PC8.8, **(644E S/N 17569 thru 20115 & 0160002519 thru 0160012085), (944E S/N 17569 thru 20123 & 0160002514 thru 0160011950)**, (no longer available, order items 17 & 18)	
13		4	LOCKWASHER, M8, **(644E S/N 17569 thru 20115 & 0160002519 thru 0160012085), (944E S/N 17569 thru 20123 & 0160002514 thru 0160011950)**, (no longer available, order items 17 & 18)	
14		1	ALTERNATOR, **(644E S/N 17569 thru 20115 & 0160002519 thru 0160014863), (944E S/N 17569 thru 20123 & 0160002514 thru 0160014857)**, (no longer available, order following Alternator service Kit 2915170, Cable Assy (944E only) 7310012 & Alternator 7029525)	
	2915170	1	ALTERNATOR SERVICE KIT	
	7310012	1	CABLE ASSY, (944E only)	
	7029525	1	ALTERNATOR, (internal fan), (torque both positive & negative alternator terminal nuts to 15nm), **(644E S/N 0160014889 & After)**, **(944E S/N 0160014891 & After)**	
15	8270428	1	STARTER	
16	7028783	1	2” FAN SPACER, (must be used w/item 11)	
17	3575947	2	FAN HUB PLATE, **(644E S/N 0160012140 & After), (944E S/N 0160011951 & After)**	
18	8310354	4	HEX HD CAPSCREW, M10-1.5X80mm, PC8.8, (torque to 34-61 NM), **(644E S/N 0160012140 & After), (944E S/N 0160011951 & After)**	
	8024038	1	250 HOUR FILTER KIT - 644E, (TIER I), (includes 5 filters: engine oil, primary fuel, inline fuel, primary air filter & safety air filter)	
	2915034	1	250 HOUR FILTER KIT - 644E, (TIER II), (includes 5 filters: engine oil, primary fuel, inline fuel, primary air filter & safety air filter)	
	8024043	1	250 HOUR FILTER KIT - 944E, (includes 5 filters: engine oil, primary fuel, inline fuel, primary air filter & safety air filter)	

Figure 4-1 Engine Mounting

Item	Part Number	Qty.	Description	Rev.
	8024037	1	1000 HOUR FILTER KIT - 644E, (TIER I), (includes 8 filters: engine oil, primary fuel, inline fuel, primary air filter, safety air filter, transmission oil, hydraulic oil & filler cap)	
	2915035	1	1000 HOUR FILTER KIT - 644E, (TIER II), (includes 8 filters: engine oil, primary fuel, inline fuel, primary air filter, safety air filter, transmission oil, hydraulic oil & filler cap)	
	8024044	1	1000 HOUR FILTER KIT - 944E, (includes 8 filters: engine oil, primary fuel, inline fuel, primary air filter, safety air filter, transmission oil, hydraulic oil & filler cap)	

Figure 4-1 Engine Mounting

Item	Part Number	Qty.	Description	Rev.

Figure 4-2 Fuel System

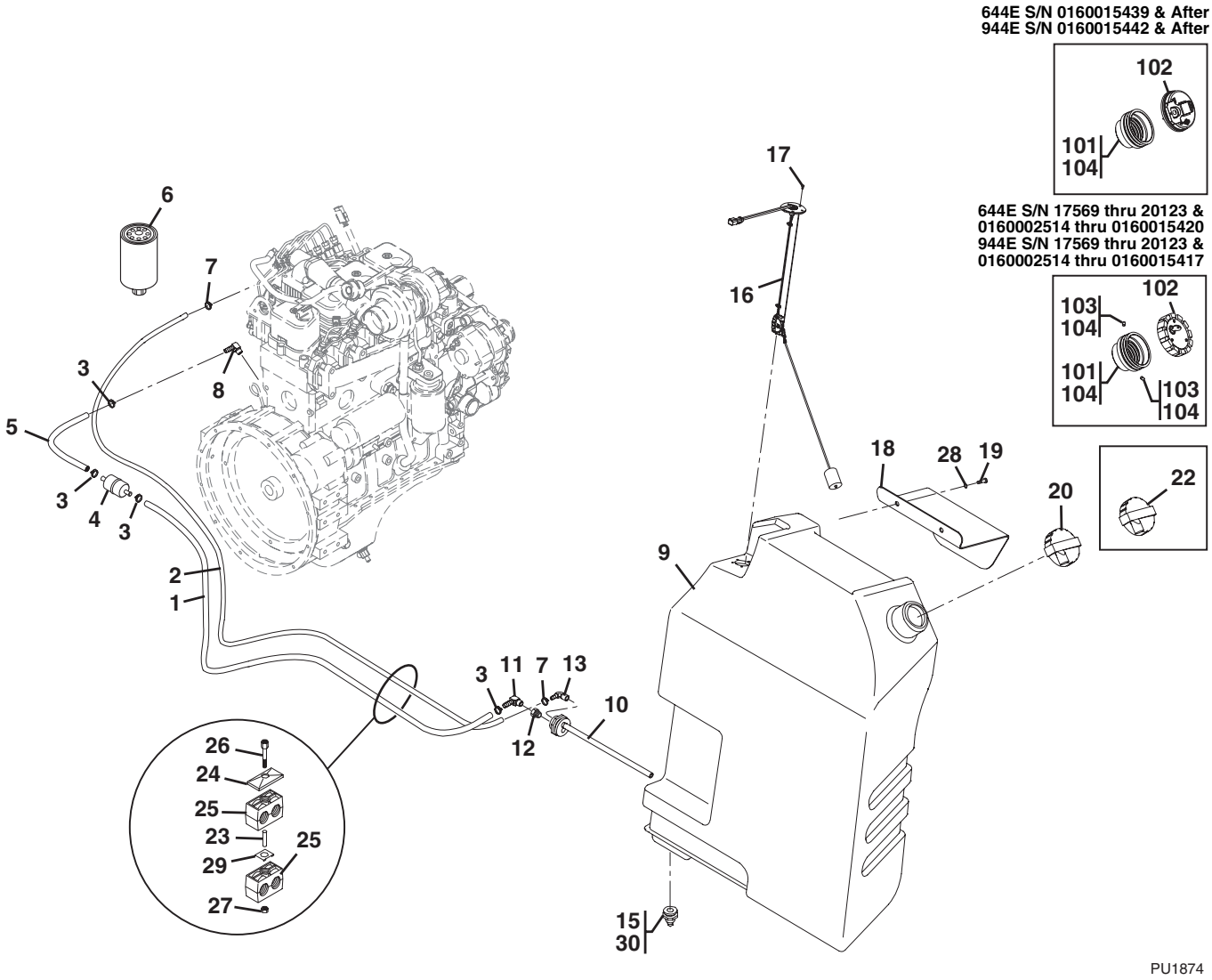

Figure 4-2 Fuel System

Item	Part Number	Qty.	Description	Rev.
1	7300379	1	FUEL SUPPLY HOSE ASSY	
2	7300378	1	FUEL RETURN HOSE ASSY	
3	8410013	4	HOSE CLAMP, #6	
4	8274022	1	INLINE FUEL FILTER	
5	7300377	1	FUEL SUPPLY HOSE ASSY	
6	8320270	1	PRIMARY FUEL FILTER, (TIER I), (644E)	
	7028838	1	PRIMARY FUEL FILTER, (TIER II), (644E)	
	8320278	1	PRIMARY FUEL FILTER, (TIER II), (944E)	
7	8405009	2	HOSE CLAMP, 7/32 DIA	
8	8420229	1	ELBOW, 3/8 HOSE	
9	7151246	1	FUEL TANK, (includes items 10, 15 & 30), **(644E S/N 17569 thru 20123 & 0160002514 thru 0160015420), (944E S/N 17569 thru 20123 & 0160002514 thru 0160015417)**	
	4400473	1	FUEL TANK, (includes items 10, 15 & 30), **(644E S/N 0160015439 & After), (944E S/N 0160015442 & After)**	
10	8036646	1	BULKHEAD FITTING ASSY, PICK-UP-TUBES, (includes items 11 thru 14)	
11	8420229	1	ELBOW, 90 DEGREES, HOSE BARB #6-4P	
12	8530041	1	PIPE ADAPTER, FEMALE TO MALE, .250 TO .250	
13	10728873	1	ADAPTER, 90 DEGREES, 5/16 HOSE TO 1/4	
14		1	BULKHEAD FITTING, PICK-UP-TUBES	
15	8036601	1	FUEL DRAIN, 3/8	
16	7301076	1	FUEL SENDER, w/GASKET	
17	8303515	5	HEX HD CAPSCREW, M4-0.7X10mm, PC8.8	
18	7300510	1	TOP FUEL TANK SUPPORT	
19	8303618	2	HEX HD CAPSCREW, M12-1.75X25mm, PC8.8	
20	2915155	1	KEYED FUEL CAP KIT, (includes items 103 & 104), **(644E S/N 17569 thru 20123 & 0160002514 thru 0160015420), (944E S/N 17569 thru 20123 & 0160002514 thru 0160015417)**	
	1001102657	1	LOCKABLE FUEL CAP KIT, (optional), (not shown), (includes items 101, 102 & 104), **(644E S/N 0160015439 & After), (944E S/N 0160015442 & After)**	
22	6623749	1	NON-LOCKING FUEL CAP, **(644E S/N 17569 thru 20123 & 0160002514 thru 0160015420), (944E S/N 17569 thru 20123 & 0160002514 thru 0160015417)**	
	1001093641	1	NON-LOCKING FUEL CAP, **(644E S/N 0160015439 & After), (944E S/N 0160015442 & After)**	
23	8303550	1	HEX HD CAPSCREW, M8-1.25X60mm, PC8.8	
24	8750025	1	TWIN CLAMP COVER	
25	8750022	1	CLAMP	
26	8303528	1	HEX HD CAPSCREW, M8X1.25X65mm, PC8.8	
27	8750043	1	RAIL NUT	
28	8307220	2	PLAIN WASHER, M12	
29	8750017	1	LOCKING PLATE	
30	70021599	1	BULKHEAD FITTING, 1/4” NPT BRASS, LEFT HAND THREAD	
101	0080271	1	FILLER NECK ADAPTER, **(644E S/N 17569 thru 20123 & 0160002514 thru 0160015420), (944E S/N 17569 thru 20123 & 0160002514 thru 0160015417)**	
	1001001422	1	FILLER NECK ADAPTER, **(644E S/N 0160015439 & After), (944E S/N 0160015442 & After)**	
102	1120591	1	KEYED FUEL CAP, (comes with 2 keys; replacement keys not available), **(644E S/N 17569 thru 20123 & 0160002514 thru 0160015420), (944E S/N 17569 thru 20123 & 0160002514 thru 0160015417)**	
	1001080707	1	LOCKABLE FUEL CAP, **(644E S/N 0160015439 & After), (944E S/N 0160015442 & After)**	

Figure 4-2 Fuel System (Continued)

Item	Part Number	Qty.	Description	Rev.
103	3900140	2	SET SCREW, 1/4-20X3/8	
104	14404978	AR	LOCTITE #641, (apply to item 101 & 103), **(644E S/N 17569 thru 20123 & 0160002514 thru 0160015420), (944E S/N 17569 thru 20123 & 0160002514 thru 0160015417)**	
	0100093	AR	LOCTITE #30512, (apply to item 101), **(644E S/N 0160015439 & After), (944E S/N 0160015442 & After)**	
			NOTE: ITEM NUMBERS NOT LISTED ARE NOT USED ON THIS FIGURE	

Figure 4-2 Fuel System (Continued)

Item	Part Number	Qty.	Description	Rev.

Figure 4-3 Radiator & Oil Cooler Mounting

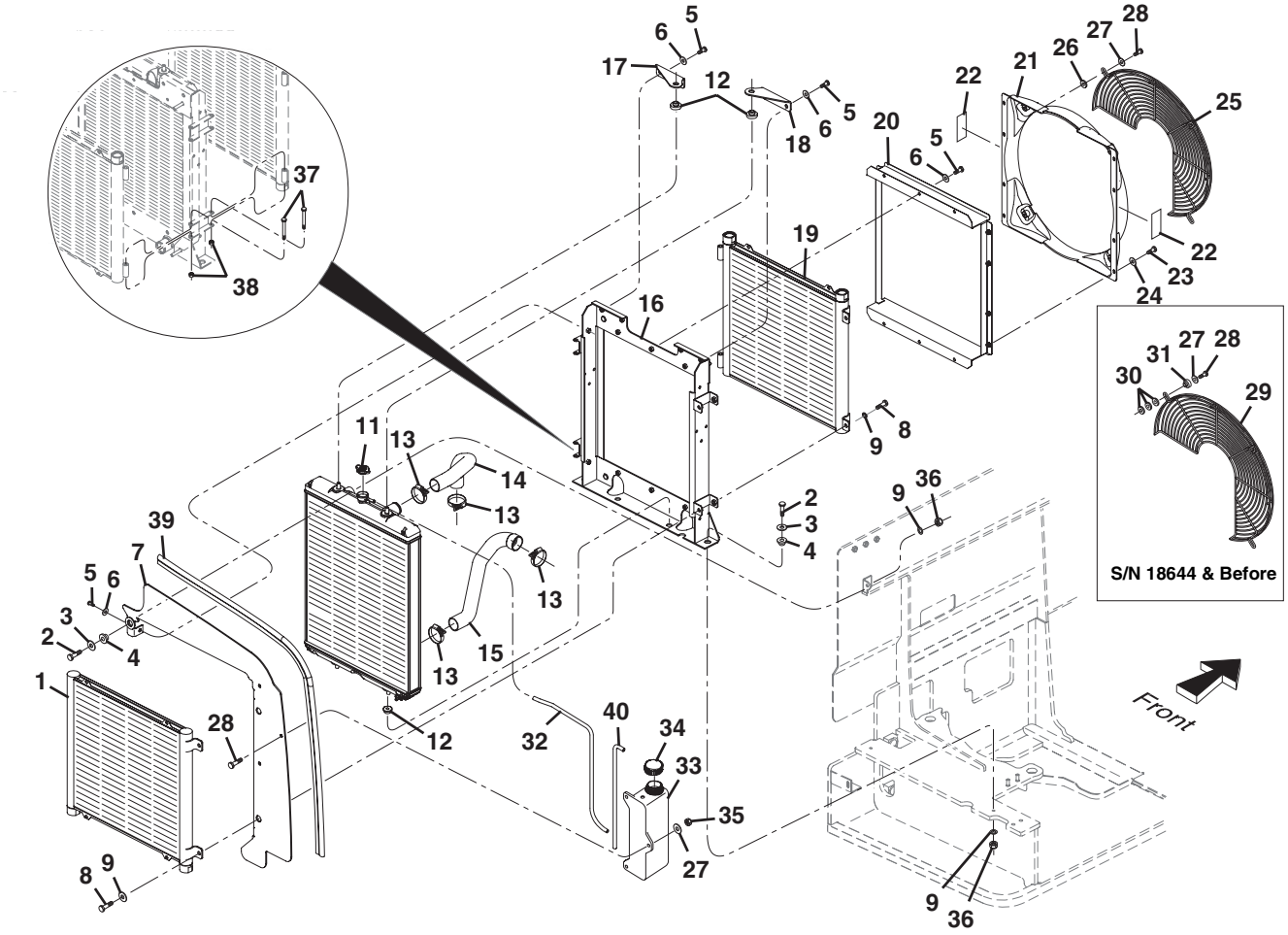

Figure 4-3 Radiator & Oil Cooler Mounting

Item	Part Number	Qty.	Description	Rev.
	8180219	Ref	RADIATOR ASSY, (includes items 1, 5 thru 12, 16 thru 20, 23 thru 28, 32 thru 35, 37, 38 & 40)	
1	8180216	1	TRANSMISSION OIL COOLER ASSY	
2	8303097	3	HEX HD CAPSCREW, M10X1.5X65mm, PC8.8	
3	7057141	3	REBOUND WASHER	
4	8278020	3	RUBBER MOUNT	
5	8303606	11	HEX HD CAPSCREW, M8-1.25X22mm, PC8.8	
6	8307222	11	PLAIN WASHER, M8	
7	7300374	1	COWLING PLATE	
8	8303798	4	HEX HD CAPSCREW, M10-1.5X25mm, PC8.8	
9	8307221	7	PLAIN WASHER, M10	
10	8180210	1	RADIATOR ASSY	
11	8180311	1	RADIATOR PRESSURE CAP, 13 PSI	
12	8180324	4	RUBBER CUSHION	
13	8405104	4	HOSE CLAMP, #28	
14	7300287	1	UPPER RADIATOR HOSE	
15	7300288	1	LOWER RADIATOR HOSE	
16	8180327	1	FRAME ASSY	
17	8180326	1	LEFT FRAME BRACKET	
18	8180325	1	RIGHT FRAME BRACKET	
19	8180215	1	HYDRAULIC OIL COOLER ASSY	
20		1	SHROUD SPACER ASSY, **(no longer available, order kit 2915055 on Figure 4-3 644E S/N 0160012140 & After, 944E S/N 0160012143 & After)**	
21		1	FAN SHROUD KIT, (includes item 22), **(no longer available, order kit 2915055 on Figure 4-3 644E S/N 0160012140 & After, 944E S/N 0160012143 & After)**	
22	4110184	2	DECAL	
23	8303656	8	HEX HD CAPSCREW, 5/16-18X7/8	
24	8307106	8	PLAIN NARROW WASHER, .312X.344X.688X.065	
25	8180332	1	FAN GUARD	
26	8307203	3	PLAIN WASHER	
27	8307222	6	PLAIN WASHER, M8-8.4-17, 1.6mm	
28	8303611	6	HEX HD CAPSCREW, M8-1.25X30mm, PC8.8	
29			FAN GUARD, (replace w/items 25, 26 & 27)	
30			PLAIN WASHER, 8.4 IDX21 OD, 4mm, (replace w/items 25, 26 & 27)	
31			SPACER, (replace w/items 25, 26 & 27)	
32	8180330	1	OVERFLOW HOSE, 700 LG	
33	8180320	1	OVERFLOW BOTTLE	
34	8866341	1	OVERFLOW BOTTLE CAP	
35	8305043	3	HEX NUT, M8-1.25 PC8.8	
36	8305630	3	HEX LOCKNUT, M10-1.5	
37	8303107	4	HEX HD CAPSCREW, 3/8-16X3-1/4	
38	8305645	4	HEX NUT, 3/8-16	
39	7300375	1	SEAL BULB	
40	8180329	1	OVERFLOW HOSE, 500 LG	

Figure 4-3 Radiator & Oil Cooler Mounting

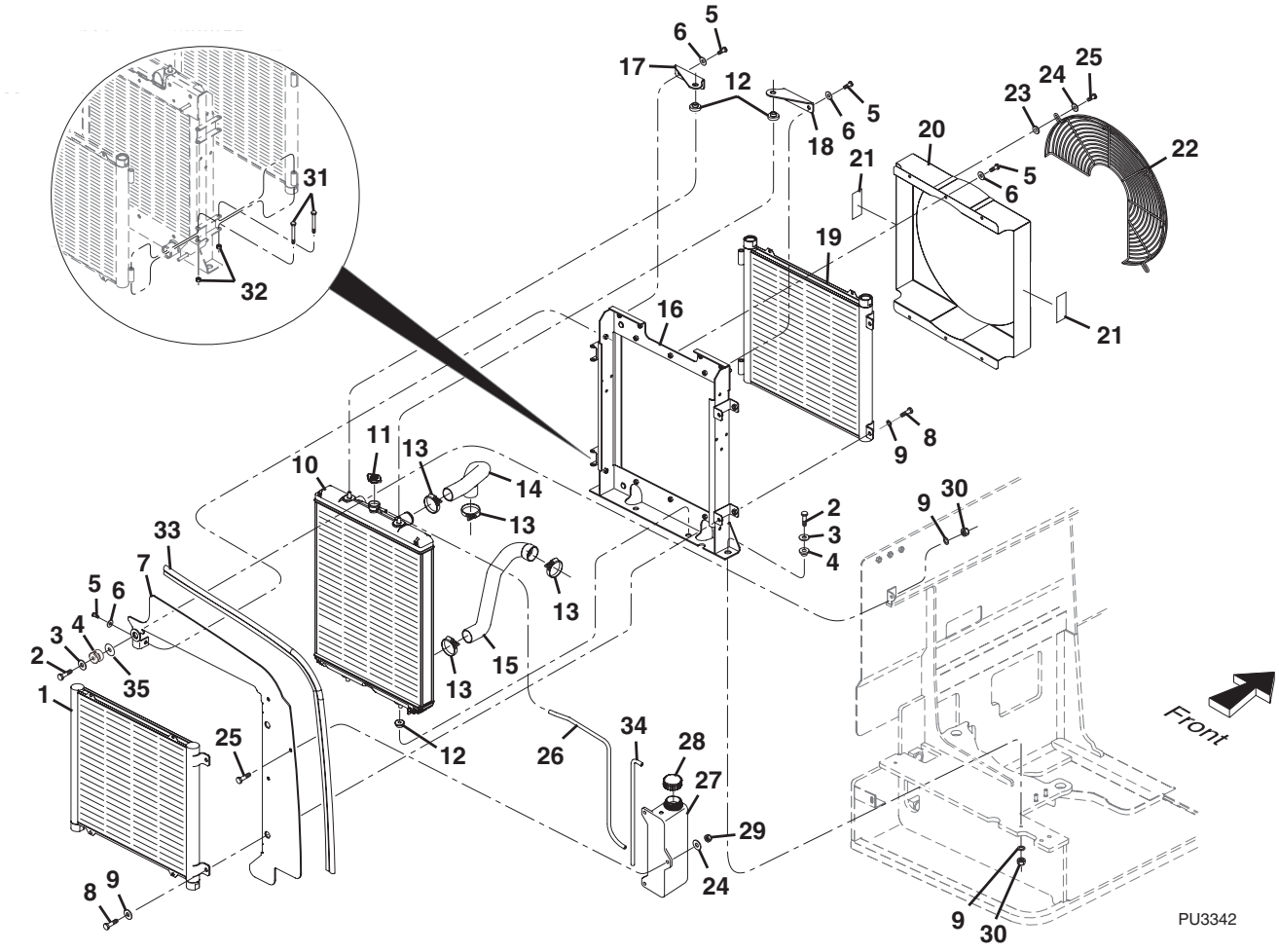

Figure 4-3 Radiator & Oil Cooler Mounting

Item	Part Number	Qty.	Description	Rev.
	3620060	Ref	RADIATOR ASSY, (includes items 1, 5 thru 12, 16 thru 20, 22 thru 29, 31, 32 & 34)	
	7300272	Ref.	REAR COOLING SUPPORT ASSY, (includes items 2 thru 4, 9, 30 & 35)	D
1	8180216	1	TRANSMISSION OIL COOLER ASSY	
2	8303097	3	HEX HD CAPSCREW, M10X1.5X65mm, PC8.8	
3	7057141	3	REBOUND WASHER	
4	8278020	3	RUBBER MOUNT	
5	8303606	11	HEX HD CAPSCREW, M8-1.25X22mm, PC8.8	
6	8307222	11	PLAIN WASHER, M8	
7	7300374	1	COWLING PLATE	
8	8303798	4	HEX HD CAPSCREW, M10-1.5X25mm, PC8.8	
9	8307221	7	PLAIN WASHER, M10	
10	8180210	1	RADIATOR ASSY	
11	8180311	1	RADIATOR PRESSURE CAP, 13 PSI	
12	8180324	4	RUBBER CUSHION	
13	8405104	4	HOSE CLAMP, #28	
14	7300287	1	UPPER RADIATOR HOSE	
15	2720557	1	LOWER RADIATOR HOSE	
16	8180327	1	FRAME ASSY	
17	8180326	1	LEFT FRAME BRACKET	
18	8180325	1	RIGHT FRAME BRACKET	
19	8180215	1	HYDRAULIC OIL COOLER ASSY	
20	7029081	1	SHROUD ASSY	
21	4110184	2	DECAL	
22	8180332	1	FAN GUARD	
23	8307203	3	PLAIN WASHER	
24	8307222	6	PLAIN WASHER, M8-8.4-17, 1.6mm	
25	8303611	6	HEX HD CAPSCREW, M8-1.25X30mm, PC8.8	
26	8180330	1	OVERFLOW HOSE, 700 LG	
27	8180320	1	OVERFLOW BOTTLE	
28	8866341	1	OVERFLOW BOTTLE CAP	
29	8305043	3	HEX NUT, M8-1.25 PC8.8	
30	8305630	3	HEX LOCKNUT, M10-1.5	
31	8303107	4	HEX HD CAPSCREW, 3/8-16X3-1/4	
32	8305645	4	HEX NUT, 3/8-16	
33	7300375	1	SEAL BULB	
34	8180329	1	OVERFLOW HOSE, 500 LG	
35	8310621	A/R	FEND WASHER, 10M-5/16-18 THD	
	2915055	1	FAN SHROUD KIT, (includes items 5, 13, 15, 20, 21 & 24)	

Figure 4-4 Air Cleaner Assembly

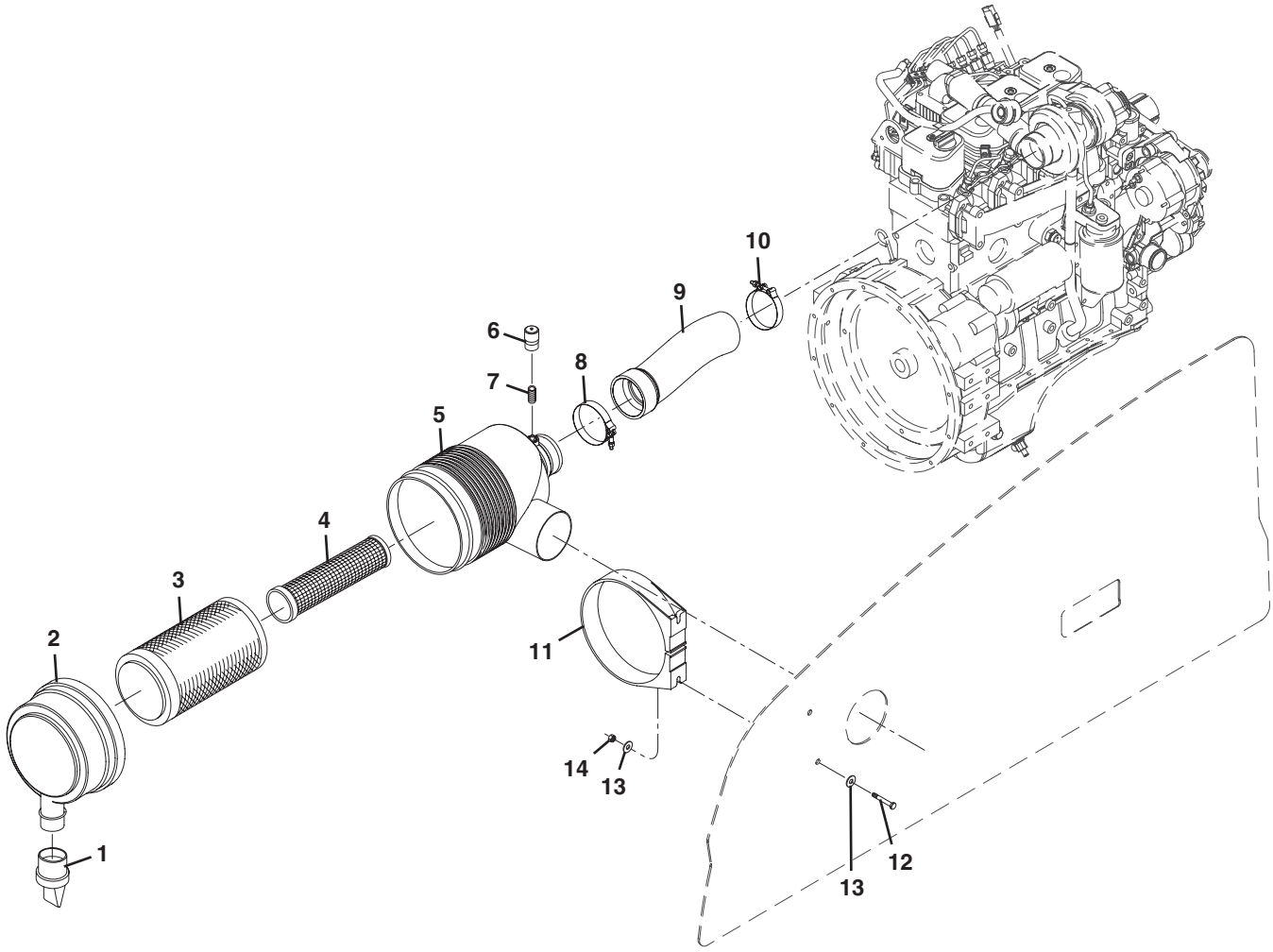

Figure 4-4 Air Cleaner Assembly

Item	Part Number	Qty.	Description	Rev.
	8273029	1	AIR CLEANER ASSY, (includes items 1 thru 5)	
1	8036869	1	VACUATOR VALVE	
2	8036868	1	COVER ASSY	
3	1101312	1	PRIMARY FILTER	
4	1101313	1	SAFETY FILTER	
5		1	BODY ASSY	
6	8223527	1	VACUUM SWITCH	
7	8551001	1	NIPPLE CLOSE, #2 DIAX.75 LG.	
8	8405404	1	T-BOLT CLAMP	
9	7300285	1	AIR INTAKE HOSE	
10	8410007	1	T-BOLT CLAMP	
11	10268516	1	AIR CLEANER MOUNTING BAND	
12	8303528	2	HEX HD CAPSCREW, M8-1.25X65mm, PC8.8	
13	8310617	4	PLAIN WASHER, M8	
14	8305654	2	HEX LOCKNUT, M8-1.25	

Figure 4-4 Air Cleaner Assembly

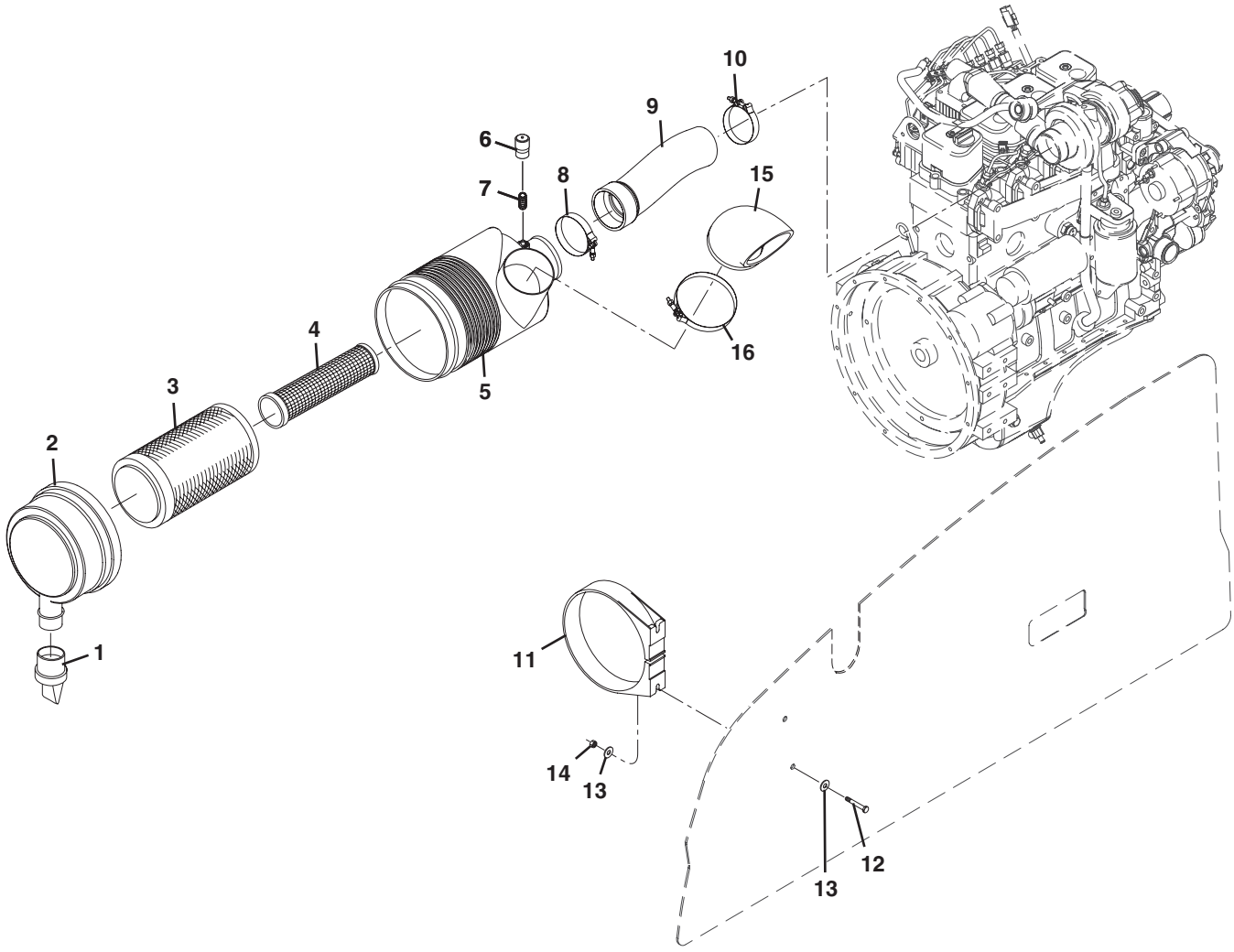

Figure 4-4 Air Cleaner Assembly

Item	Part Number	Qty.	Description	Rev.
	8273029	1	AIR CLEANER ASSY, (includes items 1 thru 5)	
1	8036869	1	VACUATOR VALVE	
2	8036868	1	COVER ASSY	
3	1101312	1	PRIMARY FILTER	
4	1101313	1	SAFETY FILTER	
5		1	BODY ASSY	
6	8223527	1	VACUUM SWITCH	
7	8551001	1	NIPPLE CLOSE, #2 DIAX.75 LG.	
8	8405404	1	T-BOLT CLAMP	
9	7300285	1	AIR INTAKE HOSE	
10	8410007	1	T-BOLT CLAMP	
11	10268516	1	AIR CLEANER MOUNTING BAND	
12	8303528	2	HEX HD CAPSCREW, M8-1.25X65mm, PC8.8	
13	8310617	4	PLAIN WASHER, M8	
14	8305654	2	HEX LOCKNUT, M8-1.25	
15	1560023	1	AIR INTAKE SCOOP	
16	8410021	1	T-BOLT CLAMP, 5	

Figure 4-5 Exhaust System

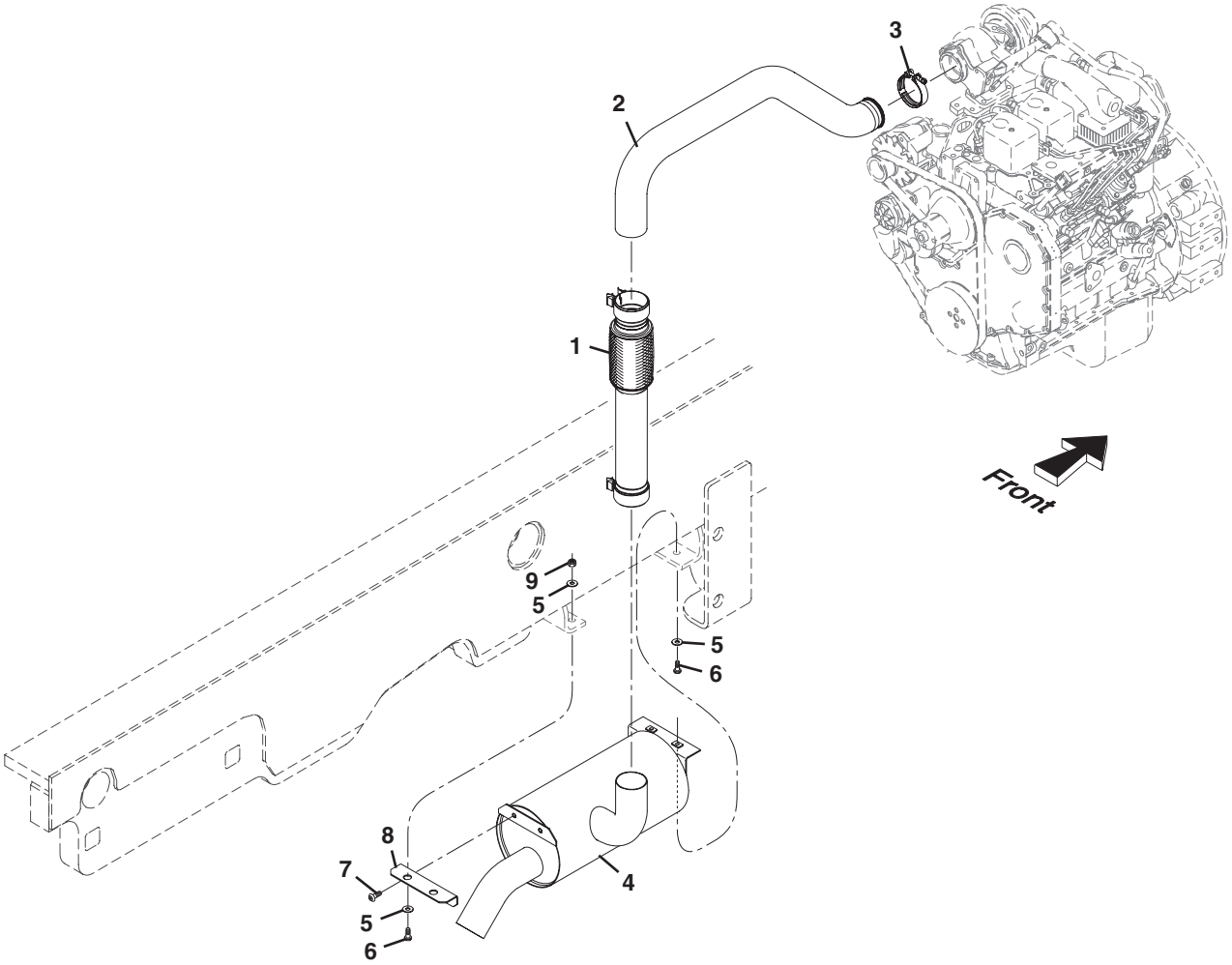

NOTE: IF YOUR 644E/944E MACHINE IS EQUIPPED w/EXHAUST SYSTEM SHOWN ON THIS PAGE, IT IS RECOMMENDED TO REPLACE IT w/RETRO FIT KIT, 2915032, SHOWN ON FIGURE 4-5, (644E S/N 0160009073 & After), (944E S/N 0160009075 & After).

PU1910

Figure 4-5 Exhaust System

Item	Part Number	Qty.	Description	Rev.
1	8275044	1	BELLOWS PIPE	
2	7139919	1	EXHAUST PIPE	
3	8275240	1	V BAND CLAMP	
4	8275042	1	ROUND MUFFLER	
5	8310621	6	FENDER WASHER, 10X30mm	
6	8303798	4	HEX HD CAPSCREW, M10-1.5X25mm, PC8.8	
7	8303551	2	HEX HD CAPSCREW, M10-1.5X16mm, PC8.8	
8	7301165	1	MUFFLER BRACKET	
9	8305038	2	HEX NUT, M10-1.5	

Figure 4-5 Exhaust System

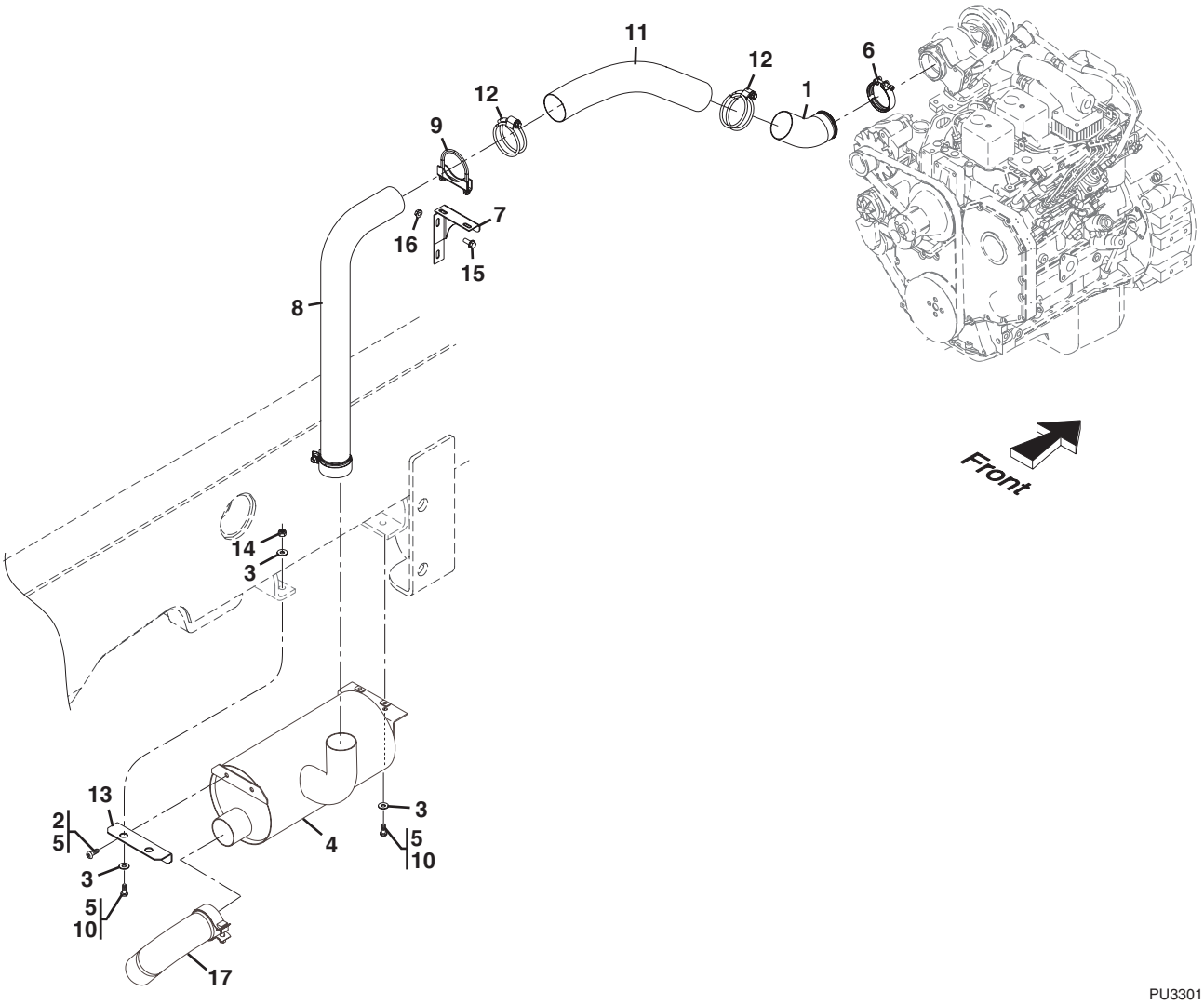

PU3301

Figure 4-5 Exhaust System

Item	Part Number	Qty.	Description	Rev.
1	3460408	1	TURBO EXHAUST PIPE	
2	8303551	2	HEX HD CAPSCREW, M10X1.5X16mm, PC8.8	
3	8310621	6	FENDER WASHER, 10mmX30mm	
4	1001100849	1	ROUND MUFFLER	
5	8526007	AR	LOCTITE, (apply to items 2 & 10)	
6	8275240	AR	V BAND CLAMP	
7	4340962	1	EXHAUST SUPPORT	
8	3460407	1	EXHAUST PIPE	
9	8275247	1	MUFFLER CLAMP, 3	
10	8303798	4	HEX HD CAPSCREW, M10X1.5X25mm,PC 8.8	
11	83681331	1	FLEX TUBING	
12	91403601	2	PIPE CLAMP	
13	7301165	1	MUFFLER BRACKET	
14	8305038	2	HEX NUT, M10X1.5	
15	5201012	2	RIPP BOLT, M10X25mm	
16	5221000	2	RIPP NUT, 10mm	
17	1001100044	1	EXHAUST TAILPIPE	
	2915032	1	RETRO FIT KIT, (includes items 1, 7, 8, 9, 11, 12, 15 & 16)	
	1001100045	1	EXHAUST TAILPIPE KIT, (includes item 17)	

This Page Intentionally Left Blank

SECTION 5
DRIVE TRAIN

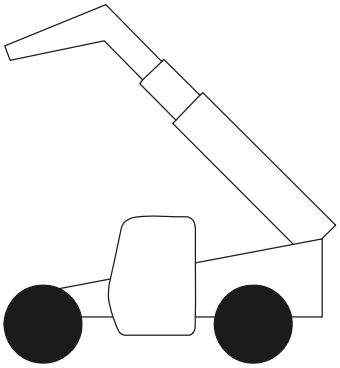

Figure 5-1 Drive Train Components

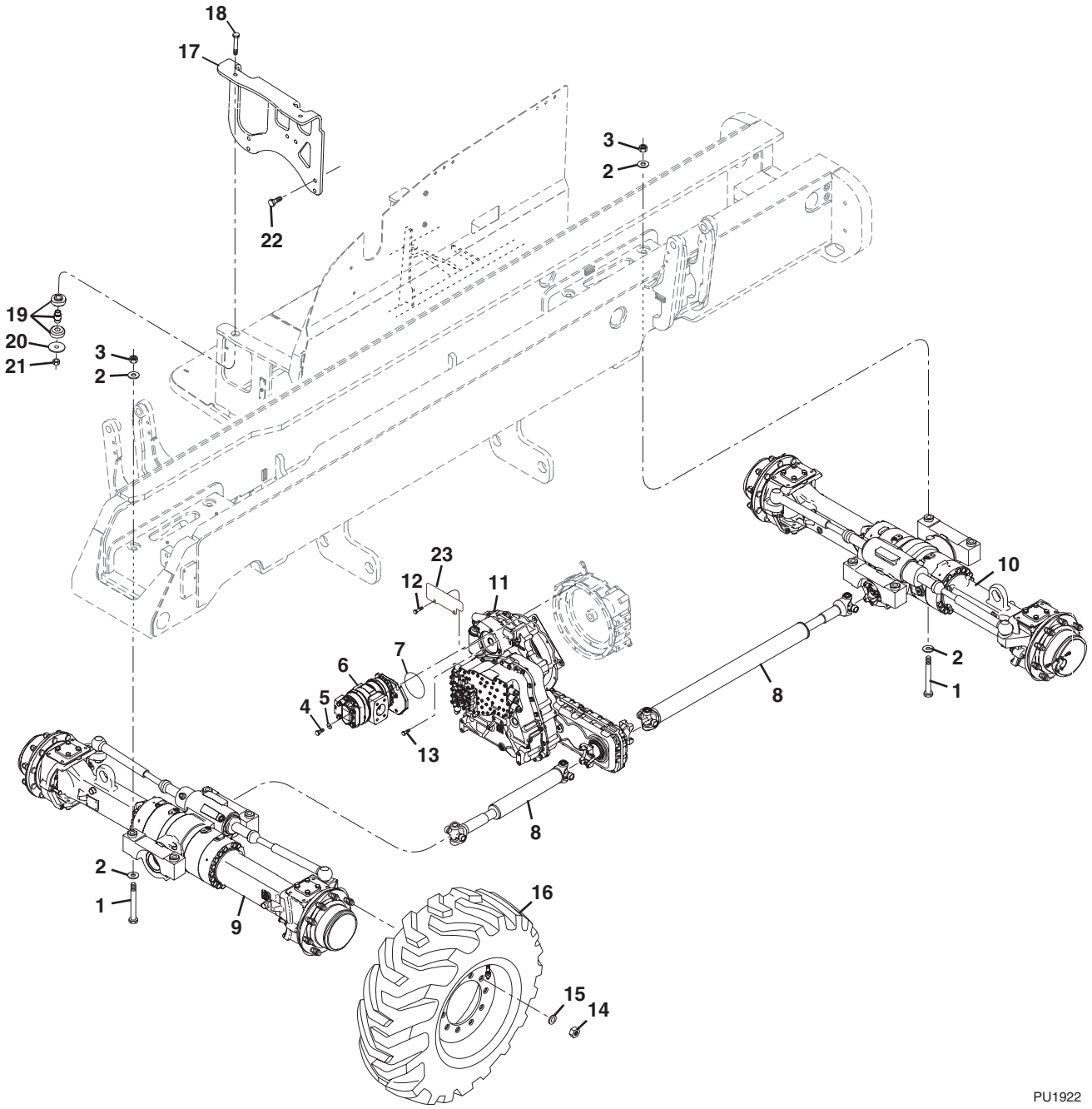

Figure 5-1 Drive Train Components

Item	Part Number	Qty.	Description	Rev.
1	8310671	8	HEX HD CAPSCREW, M24, 3X340mm, PC10.9	
2	8310061	16	PLAIN WASHER, 1	
3	8310672	8	HEX LOCKNUT, M24-3	
4	8303790	4	HEX HD CAPSCREW, M12-1.75X30mm, PC8.8	
5	8307220	4	PLAIN WASHER, M12	
6		Ref	GEAR PUMP ASSY, (see Figure 9-8 for details)	
7	8630019	1	O-RING, 4.734 I.D.X.136	
8		Ref	DRIVESHAFTS, (see Figure 5-31 for details)	
9		Ref	FRONT AXLE, (see Figure 5-2 for details)	
10		Ref	REAR AXLE, (see Figure 5-10 for details)	
11		Ref	ZF TRANSMISSION, (see Figure 5-18 for details)	
12	8303769	12	HEX HD CAPSCREW, M10, 1.5X45mm, PC8.8	
13	8303798	4	HEX HD CAPSCREW, M10, 1.5X25mm, PC8.8	
14	8786572	32	WHEEL NUT, (torque to 425-450 lb-ft), **(644-E excluding S/N 0160036724, 0160036811, 0160036907 & 0160037012)**, **(944-E excluding S/N 0160034634, 0160036710, 0160036722, 0160036735 & 0160036738)**	
	8786572	40	WHEEL NUT, (torque to 425-450 lb-ft), **(644-E S/N 0160036724, 0160036811, 0160036907 & 0160037012)**, **(944-E S/N 0160034634, 0160036710, 0160036722, 0160036735 & 0160036738)**	
15	8786573	32	SPRING WASHER, **(644-E excluding S/N 0160036724, 0160036811, 0160036907 & 0160037012)**, **(944-E excluding S/N 0160034634, 0160036710, 0160036722, 0160036735 & 0160036738)**	
	8786573	40	SPRING WASHER, **(644-E S/N 0160036724, 0160036811, 0160036907 & 0160037012)**, **(944-E S/N 0160034634, 0160036710, 0160036722, 0160036735 & 0160036738)**	
16		Ref	TIRE & RIM ASSY, (see Figure 5-32 for details)	
17	7300445	1	TRANSMISSION MOUNTING PLATE	
18	8310288	2	HEX HD CAPSCREW, 5/8-11X3-3/4, GR8	
19	8278040	2	ENGINE ISOLATOR	
20	7300435	2	REBOUND WASHER	
21	8305643	2	HEX LOCKNUT, 3/4-11	
22	8310379	6	HEX HD CAPSCREW, M16-2X45mm, PC10.9	
23	3576011	1	MOUNTING PLATE, **(644E S/N 0160012410 & After), (944E S/N 0160012745 & After)**	

Figure 5-2 Front Axle

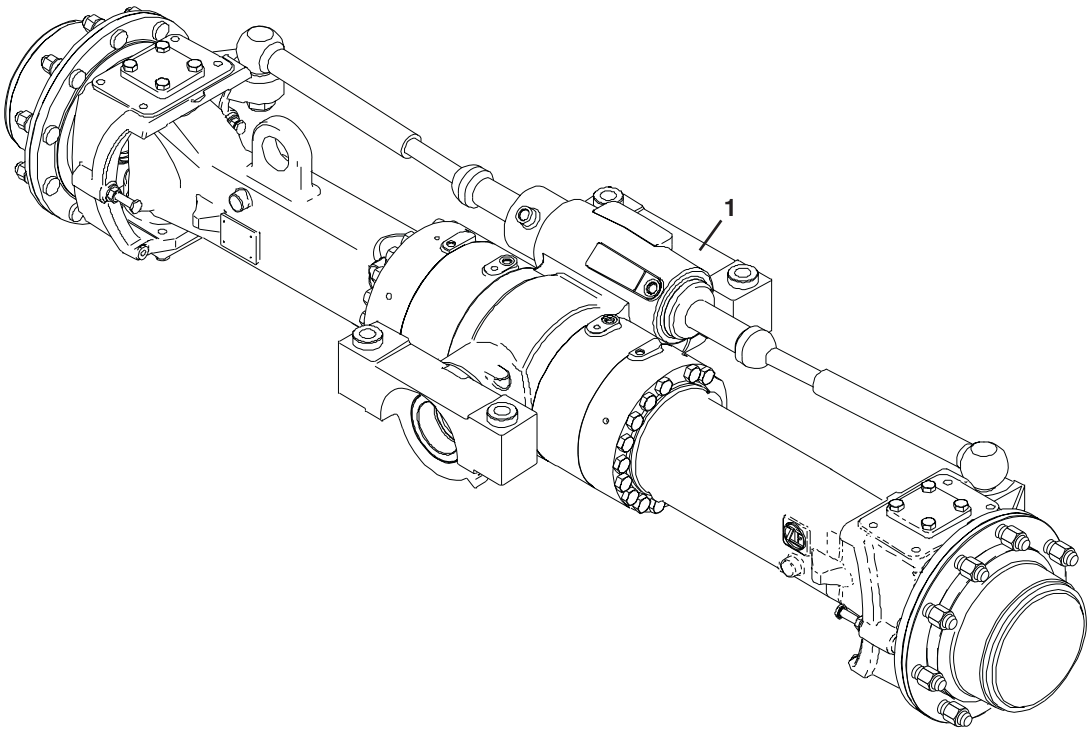

PA3920

Figure 5-2 Front Axle

Item	Part Number	Qty.	Description	Rev.
1	8040283	1	FRONT AXLE, **(644-E excluding S/N 0160036724, 0160036811, 0160036907 & 0160037012)**	
	1001103626	1	FRONT AXLE, **(644-E S/N 0160036724, 0160036811, 0160036907 & 0160037012)**	
	8040286	1	FRONT AXLE, **(944-E excluding S/N 0160034634, 0160036710, 0160036722, 0160036735 & 0160036738)**	
	1001103627	1	FRONT AXLE, **(944-E S/N 0160034634, 0160036710, 0160036722, 0160036735 & 0160036738)**	
			INPUT, (see Figure 5-3 for details)	
			LIMITED SLIP DIFFERENTIAL, (see Figure 5-4 for details)	
			AXLE CASING, (see Figure 5-5 for details)	
			M-DISC BRAKE, (see Figure 5-6 for details)	
			BRAKE, (see Figure 5-7 for details)	
			JOINT HOUSING, (see Figure 5-8 for details)	
			PLANETARY DRIVE, (see Figure 5-9 for details)	

Figure 5-3 Front Axle - Input

644E

S/N 0160036724, 0160036811,
0160036907 & 0160037012

PA3292

Figure 5-3 Front Axle - Input

Item	Part Number	Qty.	Description	Rev.
1	7027229	1	BEVEL GEAR SET, **(excluding S/N 0160036724, 0160036811, 0160036907 & 0160037012)**	
	70022232	1	BEVEL GEAR SET, **(S/N 0160036724, 0160036811, 0160036907 & 0160037012)**	
2	1319353	1	ROLLER BEARING, **(excluding S/N 0160036724, 0160036811, 0160036907 & 0160037012)**	
		1	ROLLER BEARING, **(S/N 0160036724, 0160036811, 0160036907 & 0160037012)**	
3		AR	SHIM OPTIONS, **(excluding S/N 0160036724, 0160036811, 0160036907 & 0160037012)**	
	1319333	AR	SHIM, 1.0mm	
	1319334	AR	SHIM, 1.05mm	
	1319335	AR	SHIM, 1.1mm	
	1319336	AR	SHIM, 1.15mm	
	1319337	AR	SHIM, 1.2mm	
	1319338	AR	SHIM, 1.25mm	
	1319339	AR	SHIM, 1.3mm	
	1319340	AR	SHIM, 1.35mm	
	1319341	AR	SHIM, 1.4mm	
	1319342	AR	SHIM, 1.45mm	
	1319343	AR	SHIM, 1.5mm	
	1319344	AR	SHIM, 1.55mm	
	1319345	AR	SHIM, 1.6mm	
	1319346	AR	SHIM, 0.9mm	
	1319347	AR	SHIM, 0.95mm	
	1319348	AR	SHIM, 0.65mm	
	1319349	AR	SHIM, 0.70mm	
	1319350	AR	SHIM, 0.75mm	
	1319351	AR	SHIM, 0.85mm	
	1319352	AR	SHIM, 0.80mm	
		AR	SHIM OPTIONS, **(S/N 0160036724, 0160036811, 0160036907 & 0160037012)**	
	80304160	1	SHIM, S=0.1	
	80304159	1	SHIM, S=0.2	
	80304158	1	SHIM, S=0.3	
	80304157	1	SHIM, S=0.5	
	80304156	1	SHIM, S=0.6	
	80304162	1	SHIM, S=0.65	
	80304155	1	SHIM, S=0.7	
	80304161	1	SHIM, S=0.75	
	80304154	1	SHIM, S=0.8	
	80304153	1	SHIM, S=0.9	
	80304152	1	SHIM, S=1.0	
	80304146	1	SHIM, S=1.2	
	80304163	1	SHIM, S=1.25	
	80304151	1	SHIM, S=1.3	
	80304164	1	SHIM, S=1.35	
	80304150	1	SHIM, S=1.4	
	80304165	1	SHIM, S=1.45	
	80304145	1	SHIM, S=1.5	

Figure 5-3 Front Axle - Input (Continued)

Item	Part Number	Qty.	Description	Rev.
	80304166	1	SHIM, S=1.55	
	80304149	1	SHIM, S=1.6	
	80304167	1	SHIM, S=1.65	
	80304148	1	SHIM, S=1.7	
	80304168	1	SHIM, S=1.75	
	80304144	1	SHIM, S=1.8	
	80304169	1	SHIM, S=1.85	
	80304147	1	SHIM, S=1.9	
	80304143	1	SHIM, S=2.0	
4		AR	RING OPTIONS, **(excluding S/N 0160036724, 0160036811, 0160036907 & 0160037012)**	
	1319354	AR	RING, 15.1mm	
	1319355	AR	RING, 15.2mm	
	1319356	AR	RING, 15.3mm	
	1319357	AR	RING, 15.4mm	
	1319358	AR	RING, 15.5mm	
	1319359	AR	RING, 15.6mm	
	1319360	AR	RING, 15.7mm	
	1319361	AR	RING, 15.8mm	
	1319362	AR	RING, 15.9mm	
	1319363	AR	RING, 16.0mm	
	1319364	AR	RING, 16.1mm	
	1319365	AR	RING, 16.2mm	
	1319366	AR	RING, 16.3mm	
	1319367	AR	RING, 16.4mm	
	8035982	AR	RING, 16.26mm	
	1319369	AR	RING, 16.23mm	
	1319370	AR	RING, 16.16mm	
	1319371	AR	RING, 16.13mm	
	1319372	AR	RING, 16.06mm	
	1319373	AR	RING, 16.03mm	
	1319374	AR	RING, 15.96mm	
	1319375	AR	RING, 15.93mm	
	1319376	AR	RING, 15.86mm	
	1319377	AR	RING, 15.83mm	
	1319378	AR	RING, 15.76mm	
	1319379	AR	RING, 15.73mm	
	1319380	AR	RING, 15.66mm	
	1319381	AR	RING, 15.63mm	
	1319382	AR	RING, 15.56mm	
	1319383	AR	RING, 15.53mm	
	1319384	AR	RING, 15.46mm	
	1319385	AR	RING, 15.43mm	
	1319386	AR	RING, 15.36mm	
	1319388	AR	RING, 15.26mm	
	1319389	AR	RING, 15.38mm	
	1319390	AR	RING, 15.48mm	
	1319391	AR	RING, 15.58mm	
	1319392	AR	RING, 15.68mm	

Figure 5-3 Front Axle - Input (Continued)

Item	Part Number	Qty.	Description	Rev.
	1319393	AR	RING, 15.69mm	
	1319394	AR	RING, 15.72mm	
	1319395	AR	RING, 15.78mm	
	1319396	AR	RING, 15.81mm	
	1319397	AR	RING, 15.84mm	
	1319398	AR	RING, 15.88mm	
	1319399	AR	RING, 15.89mm	
	1319400	AR	RING, 15.91mm	
	1319401	AR	RING, 15.94mm	
	1319402	AR	RING, 15.97mm	
		AR	RING OPTIONS, **(S/N 0160036724, 0160036811, 0160036907 & 0160037012)**	
	80304088	1	RING, S=16.0	
	80304089	1	RING, S=16.1	
	80304090	1	RING, S=16.2	
	80304091	1	RING, S=16.3	
	80304092	1	RING, S=16.4	
	80304093	1	RING, S=16.5	
	80304110	1	RING, S=16.56	
	80304094	1	RING, S=16.6	
	80304111	1	RING, S=16.62	
	80304112	1	RING, S=16.64	
	80304124	1	RING, S=16.66	
	80304113	1	RING, S=16.68	
	80304095	1	RING, S=16.7	
	70022216	1	RING, S=16.72	
	80304115	1	RING, S=16.74	
	80304117	1	RING, S=16.76	
	80304118	1	RING, S=16.78	
	80304096	1	RING, S=16.8	
	80304119	1	RING, S=16.82	
	80304120	1	RING, S=16.84	
	80304104	1	RING, S=16.86	
	80304121	1	RING, S=16.88	
	80304122	1	RING, S=16.9	
	80304097	1	RING, S=16.92	
	80304123	1	RING, S=16.94	
	80304125	1	RING, S=16.96	
	80304107	1	RING, S=16.98	
	80304126	1	RING, S=17.0	
	80304127	1	RING, S=17.02	
	80304108	1	RING, S=17.04	
	80304128	1	RING, S=17.06	
	80304129	1	RING, S=17.08	
	80304099	1	RING, S=17.10	
	80304130	1	RING, S=17.12	
	80304131	1	RING, S=17.14	
	80304132	1	RING, S=17.16	
	80304133	1	RING, S=17.18	
	80304100	1	RING, S=17.2	

Figure 5-3 Front Axle - Input (Continued)

Item	Part Number	Qty.	Description	Rev.
	80304134	1	RING, S=17.22	
	80304135	1	RING, S=17.24	
	80304136	1	RING, S=17.26	
	80304137	1	RING, S=17.28	
	80304101	1	RING, S=17.3	
	80304102	1	RING, S=17.4	
5	1319444	1	ROLLER BEARING, **(excluding S/N 0160036724, 0160036811, 0160036907 & 0160037012)**	
	1319353	1	ROLLER BEARING, **(S/N 0160036724, 0160036811, 0160036907 & 0160037012)**	
6	1321211	1	MULTI SEAL RING, **(excluding S/N 0160036724, 0160036811, 0160036907 & 0160037012)**	
	70022220	1	SHAFT SEAL, **(S/N 0160036724, 0160036811, 0160036907 & 0160037012)**	
7	1321237	1	END YOKE, **(excluding S/N 0160036724, 0160036811, 0160036907 & 0160037012)**	
	70022245	1	END YOKE, **(S/N 0160036724, 0160036811, 0160036907 & 0160037012)**	
8	1319406	1	WASHER, **(excluding S/N 0160036724, 0160036811, 0160036907 & 0160037012)**	
	80304082	1	WASHER, **(S/N 0160036724, 0160036811, 0160036907 & 0160037012)**	
9	8035983	1	HEX NUT, **(excluding S/N 0160036724, 0160036811, 0160036907 & 0160037012)**	
	70022213	1	HEX NUT, **(S/N 0160036724, 0160036811, 0160036907 & 0160037012)**	
10	70022244	1	SCREEN SHEET, **(S/N 0160036724, 0160036811, 0160036907 & 0160037012)**	

Figure 5-3 Front Axle - Input (Continued)

Item	Part Number	Qty.	Description	Rev.

Figure 5-3 Front Axle - Input

944E

S/N 0160034634, 0160036710, 0160036722, 0160036735 & 0160036738

PA3292

Figure 5-3 Front Axle - Input

Item	Part Number	Qty.	Description	Rev.
1	1321230	1	BEVEL GEAR SET, **(excluding S/N 0160034634, 0160036710, 0160036722, 0160036735 & 0160036738)**	
	70022272	1	BEVEL GEAR SET, **(S/N 0160034634, 0160036710, 0160036722, 0160036735 & 0160036738)**	
2	1321213	1	ROLLER BEARING, **(excluding S/N 0160034634, 0160036710, 0160036722, 0160036735 & 0160036738)**	
		1	ROLLER BEARING, **(S/N 0160034634, 0160036710, 0160036722, 0160036735 & 0160036738)**	
3		AR	SHIM OPTIONS, **(excluding S/N 0160034634, 0160036710, 0160036722, 0160036735 & 0160036738)**	
	1321187	AR	SHIM, 1.5mm	
	8035871	AR	SHIM, 0.9mm	
	8035872	AR	SHIM, 0.95mm	
	8035873	AR	SHIM, 1.0mm	
	1321186	AR	SHIM, 1.05mm	
	8035874	AR	SHIM, 1.1mm	
	8035875	AR	SHIM, 1.15mm	
	1321185	AR	SHIM, 1.2mm	
	8035876	AR	SHIM, 1.25mm	
	8035877	AR	SHIM, 1.3mm	
	1321189	AR	SHIM, 0.7mm	
	8035878	AR	SHIM, 1.75mm	
	8035879	AR	SHIM, 0.8mm	
	1321190	AR	SHIM, 0.85mm	
		AR	SHIM OPTIONS, **(S/N 0160034634, 0160036710, 0160036722, 0160036735 & 0160036738)**	
	80304160	1	SHIM, S=0.1	
	80304159	1	SHIM, S=0.2	
	80304158	1	SHIM, S=0.3	
	80304157	1	SHIM, S=0.5	
	80304156	1	SHIM, S=0.6	
	80304162	1	SHIM, S=0.65	
	80304155	1	SHIM, S=0.7	
	80304161	1	SHIM, S=0.75	
	80304154	1	SHIM, S=0.8	
	80304153	1	SHIM, S=0.9	
	80304152	1	SHIM, S=1.0	
	80304146	1	SHIM, S=1.2	
	80304163	1	SHIM, S=1.25	
	80304151	1	SHIM, S=1.3	
	80304164	1	SHIM, S=1.35	
	80304150	1	SHIM, S=1.4	
	80304165	1	SHIM, S=1.45	
	80304145	1	SHIM, S=1.5	
	80304166	1	SHIM, S=1.55	
	80304149	1	SHIM, S=1.6	
	80304167	1	SHIM, S=1.65	
	80304148	1	SHIM, S=1.7	
	80304168	1	SHIM, S=1.75	
	80304144	1	SHIM, S=1.8	

Figure 5-3 Front Axle - Input (Continued)

Item	Part Number	Qty.	Description	Rev.
	80304169	1	SHIM, S=1.85	
	80304147	1	SHIM, S=1.9	
	80304143	1	SHIM, S=2.0	
4		AR	RING OPTIONS, **(excluding S/N 0160034634, 0160036710, 0160036722, 0160036735 & 0160036738)**	
	8035881	1	RING, 11.30mm	
	8035882	1	RING, 11.33mm	
	8035883	1	RING, 11.36mm	
	8035884	1	RING, 11.39mm	
	8035885	1	RING, 11.42mm	
	8035886	1	RING, 11.45mm	
	1321196	1	RING, 11.48mm	
	8035887	1	RING, 11.51mm	
	8035888	1	RING, 11.54mm	
	8035889	1	RING, 11.57mm	
	8035890	1	RING, 11.60mm	
	8035891	1	RING, 11.63mm	
	1321197	1	RING, 11.66mm	
	8035892	1	RING, 11.69mm	
	8035893	1	RING, 11.72mm	
	8035894	1	RING, 11.75mm	
	8035895	1	RING, 11.78mm	
	8035896	1	RING, 11.81mm	
	1321198	1	RING, 11.84mm	
	8035897	1	RING, 11.87mm	
	8035898	1	RING, 11.90mm	
	8035899	1	RING, 11.93mm	
	8035900	1	RING, 11.96mm	
	8035901	1	RING, 11.99mm	
	8035902	1	RING, 12.02mm	
	1321199	1	RING, 12.05mm	
	8035903	1	RING, 12.08mm	
	8035904	1	RING, 12.11mm	
	8035905	1	RING, 12.14mm	
	8035906	1	RING, 12.17mm	
	8036841	1	RING, 12.20mm	
	8035907	1	RING, 12.23mm	
	8035908	1	RING, 12.26mm	
	8035909	1	RING, 12.29mm	
	8035910	1	RING, 12.32mm	
	8035911	1	RING, 12.35mm	
	1321201	1	RING, 12.38mm	
	8035912	1	RING, 11.27mm	
	1321204	1	RING, 11.24mm	
	8035913	1	RING, 11.21mm	
	8035914	1	RING, 11.18mm	
	8035915	1	RING, 11.15mm	
	8035916	1	RING, 11.12mm	
	1321203	1	RING, 11.09mm	

Figure 5-3 Front Axle - Input (Continued)

Item	Part Number	Qty.	Description	Rev.
	8035917	1	RING, 11.06mm	
	8035918	1	RING, 11.03mm	
	8035919	1	RING, 11.00mm	
	8035920	1	RING, 10.97mm	
	1321202	1	RING, 10.94mm	
		AR	RING OPTIONS, **(S/N 0160034634, 0160036710, 0160036722, 0160036735 & 0160036738)**	
	80304088	1	RING, S=16.0	
	80304089	1	RING, S=16.1	
	80304090	1	RING, S=16.2	
	80304091	1	RING, S=16.3	
	80304092	1	RING, S=16.4	
	80304093	1	RING, S=16.5	
	80304110	1	RING, S=16.56	
	80304094	1	RING, S=16.6	
	80304111	1	RING, S=16.62	
	80304112	1	RING, S=16.64	
	80304124	1	RING, S=16.66	
	80304113	1	RING, S=16.68	
	80304095	1	RING, S=16.7	
	70022216	1	RING, S=16.72	
	80304115	1	RING, S=16.74	
	80304117	1	RING, S=16.76	
	80304118	1	RING, S=16.78	
	80304096	1	RING, S=16.8	
	80304119	1	RING, S=16.82	
	80304120	1	RING, S=16.84	
	80304104	1	RING, S=16.86	
	80304121	1	RING, S=16.88	
	80304122	1	RING, S=16.9	
	80304097	1	RING, S=16.92	
	80304123	1	RING, S=16.94	
	80304125	1	RING, S=16.96	
	80304107	1	RING, S=16.98	
	80304126	1	RING, S=17.0	
	80304127	1	RING, S=17.02	
	80304108	1	RING, S=17.04	
	80304128	1	RING, S=17.06	
	80304129	1	RING, S=17.08	
	80304099	1	RING, S=17.10	
	80304130	1	RING, S=17.12	
	80304131	1	RING, S=17.14	
	80304132	1	RING, S=17.16	
	80304133	1	RING, S=17.18	
	80304100	1	RING, S=17.2	
	80304134	1	RING, S=17.22	
	80304135	1	RING, S=17.24	
	80304136	1	RING, S=17.26	
	80304137	1	RING, S=17.28	

Figure 5-3 Front Axle - Input (Continued)

Item	Part Number	Qty.	Description	Rev.
	80304101	1	RING, S=17.3	
	80304102	1	RING, S=17.4	
5	1321212	1	ROLLER BEARING, **(excluding S/N 0160034634, 0160036710, 0160036722, 0160036735 & 0160036738)**	
	1319353	1	ROLLER BEARING, **(S/N 0160034634, 0160036710, 0160036722, 0160036735 & 0160036738)**	
6	1321210	1	COMBINATION RING, **(excluding S/N 0160034634, 0160036710, 0160036722, 0160036735 & 0160036738)**	
	70022220	1	SHAFT SEAL, **(S/N 0160034634, 0160036710, 0160036722, 0160036735 & 0160036738)**	
7	1321248	1	END YOKE, **(excluding S/N 0160034634, 0160036710, 0160036722, 0160036735 & 0160036738)**	
	70022245	1	END YOKE, **(S/N 0160034634, 0160036710, 0160036722, 0160036735 & 0160036738)**	
8	1321194	1	WASHER, **(excluding S/N 0160034634, 0160036710, 0160036722, 0160036735 & 0160036738)**	
	80304082	1	WASHER, **(S/N 0160034634, 0160036710, 0160036722, 0160036735 & 0160036738)**	
9	8035921	1	HEX NUT, **(excluding S/N 0160034634, 0160036710, 0160036722, 0160036735 & 0160036738)**	
	70022213	1	HEX NUT, **(S/N 0160034634, 0160036710, 0160036722, 0160036735 & 0160036738)**	
10	70022244	1	SCREEN SHEET, **(S/N 0160034634, 0160036710, 0160036722, 0160036735 & 0160036738)**	

Figure 5-3 Front Axle - Input (Continued)

Item	Part Number	Qty.	Description	Rev.

Figure 5-4 Front Axle - Limited Slip Differential

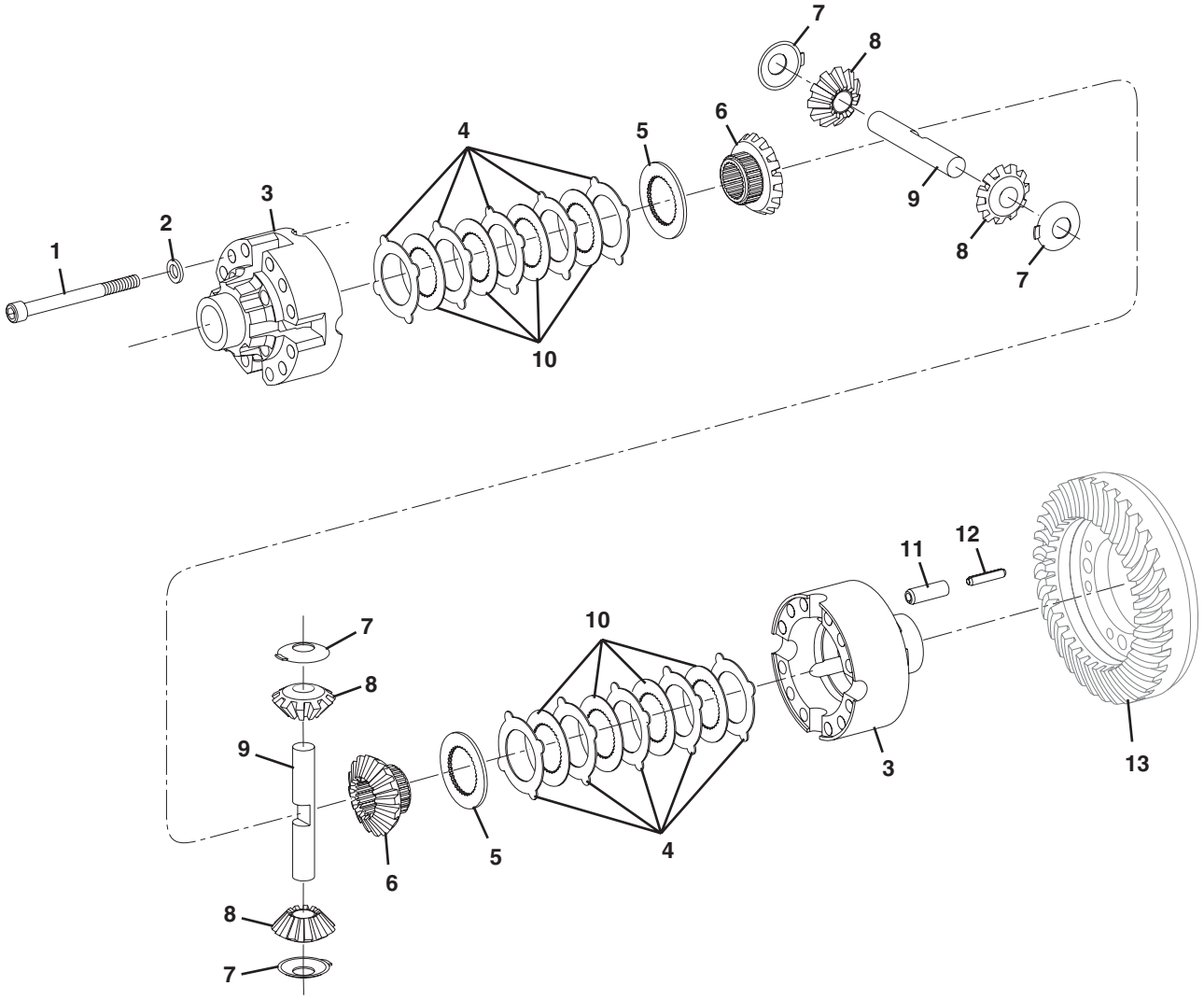

Figure 5-4 Front Axle - Limited Slip Differential

Item	Part Number	Qty.	Description	Rev.
	7027230	1	LIMITED SLIP DIFFERENTIAL ASSY, (includes items 1 thru 12)	
1	8035923	12	CAPSCREW	
2	1321184	12	WASHER	
3	1321215	1	DIFFERENTIAL CASE	
4	1321219	10	O. CLUTCH DISC, 1.2mm	
	1321220	10	O. CLUTCH DISC, 1.3mm	
	1321221	10	O. CLUTCH DISC, 1.4mm	
5	1321217	2	PRESSURE DISC	
6	7027225	2	AXLE BEVEL GEAR	
7	1319415	4	THRUST WASHER	
8	8036753	4	DIFFERENTIAL BEVEL GEAR	
9	1321225	2	DIFFERENTIAL AXLE	
10	1321218	8	I. CLUTCH DISC	
11	1321153	4	SLOTTED PIN	
12	1321154	4	SLOTTED PIN	
13		Ref	GEAR SET BEVEL, (see Figure 5-3 for details)	

Figure 5-4 Front Axle - Limited Slip Differential

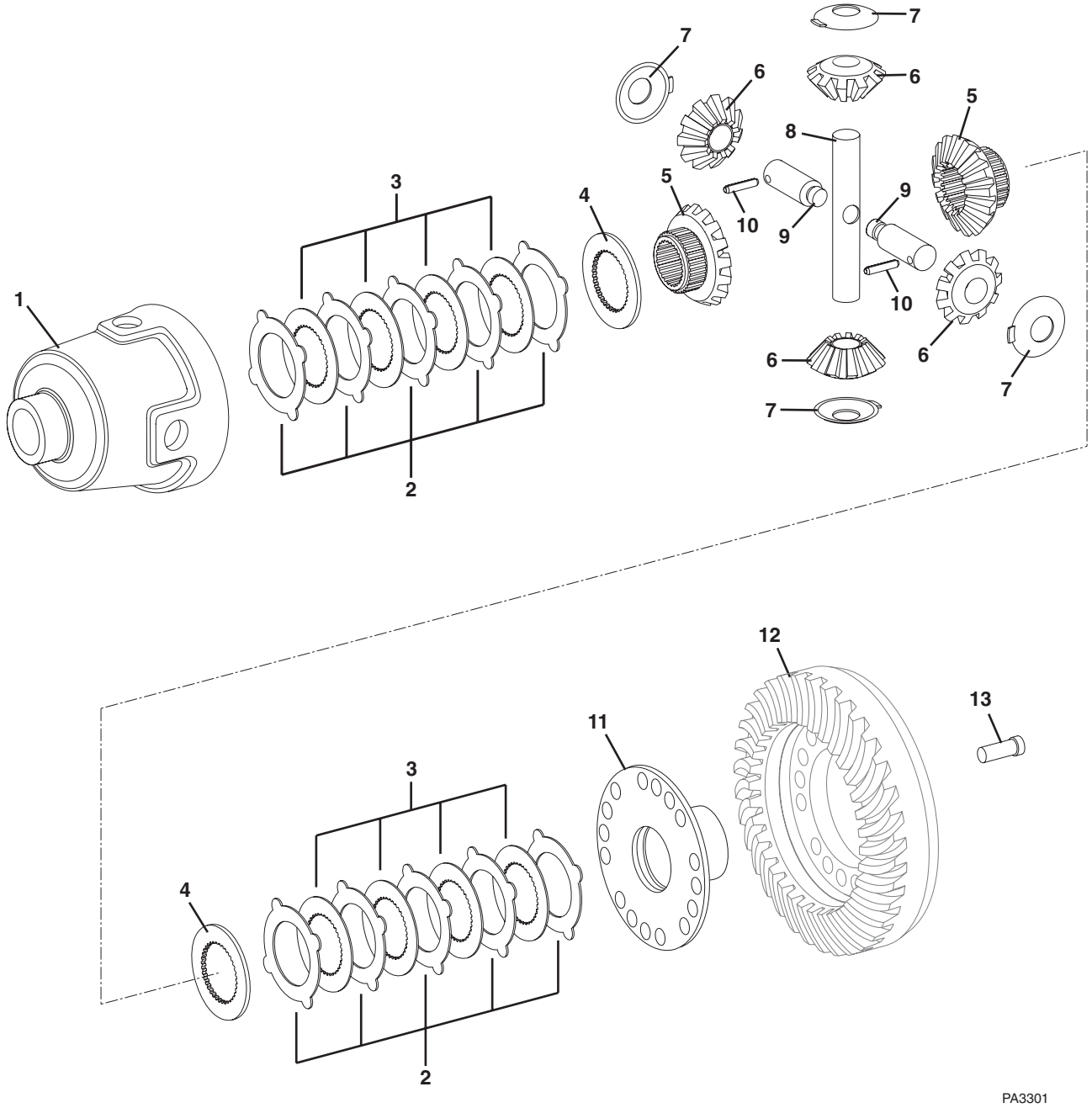

Figure 5-4 Front Axle - Limited Slip Differential

Item	Part Number	Qty.	Description	Rev.
1	70022226	1	DIFFERENTIAL CASE	
2	70022263	A/R	O.CLUTCH DISC, A=1.2	
	70022264	A/R	O.CLUTCH DISC, A=1.3	
3	70022260	8	I.CLUTCH DISC	
4	70022261	2	PRESSURE DISC	
5	70022225	2	AXLE BEVEL GEAR	
6	70022185	4	DIFFERENTIAL BEVEL GEAR	
7	70022262	4	THRUST WASHER	
8	70022227	1	DIFFERENTIAL AXLE	
9	70022228	2	DIFFERENTIAL AXLE	
10	70022200	2	SLOTTED PIN	
11	70022229	1	COVER	
12		Ref	CROWN WHEEL, (see Figure 5-3 for details)	
13	70022211	16	CAP SCREW, M12X1.5X35	

Figure 5-5 Front Axle - Axle Casing

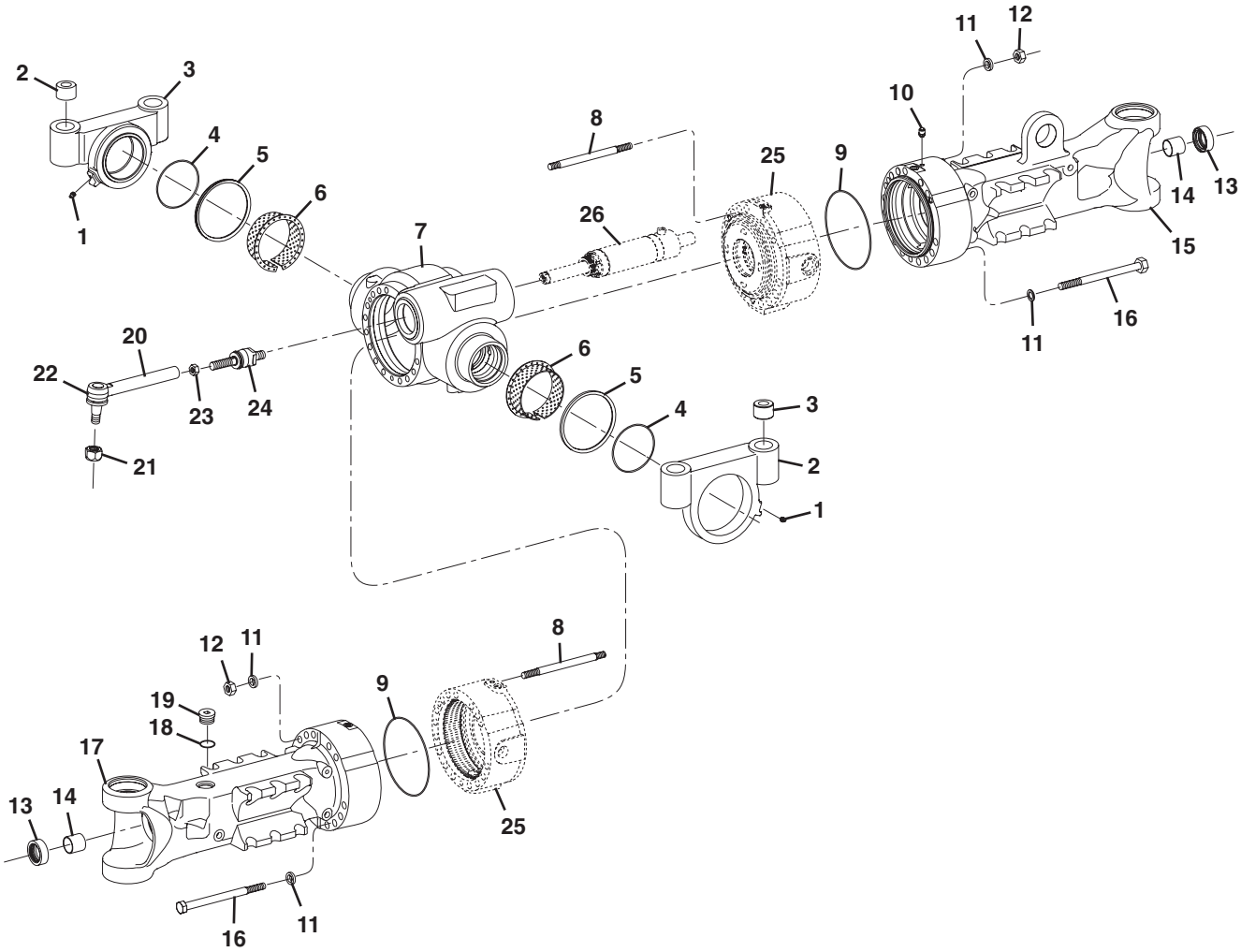

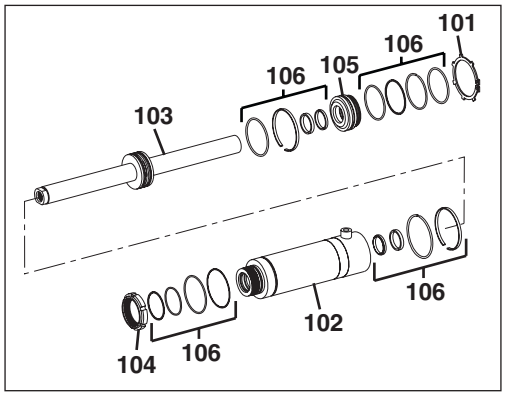

644E Before Axle S/N 1277813
944E Before Axle S/N 974122

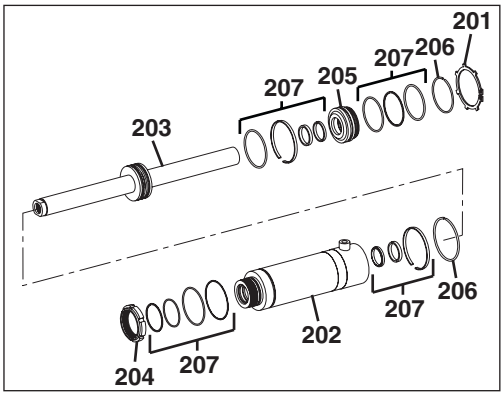

644E Axle S/N 1277813 & After
944E Axle S/N 974122 & After

PU1981

Figure 5-5 Front Axle - Axle Casing

Item	Part Number	Qty.	Description	Rev.
1	1319423	2	GREASE FITTING	
2	1319441	4	CENTERING BUSHING	
3	8035933	2	BRACKET	
4	1319439	2	O-RING	
5	1319440	2	V-RING	
6	8036419	2	FLANGE BUSHING	
7	7027227	1	AXLE DRIVE HOUSING, (644E)	
	8036417	1	AXLE DRIVE HOUSING, (944E)	
8	8036313	8	STUD	
9	1319425	2	O-RING	
10	1319436	1	BREATHER	
11	8036312	30	WASHER	
12	1319429	8	HEX NUT	
13	7027211	2	SHAFT SEAL	
14	1319433	2	BUSHING	
15	8036430	1	RIGHT FRONT AXLE CASING, (644E)	
	8035924	1	RIGHT FRONT AXLE CASING, (944E)	
16	8035927	22	HEX SCREW	
17	8036431	1	LEFT FRONT AXLE CASING, (644E)	
	8035925	1	LEFT FRONT AXLE CASING, (944E)	
18	8036331	1	O-RING	
19	1319506	1	SCREW PLUG	
20	1321148	2	TRACK ROD, (includes items 21 thru 24)	
21	8036758	1	LOCKING NUT	
22	8036756	1	BALL JOINT w/PIPE COUPLING	
23	8036759	1	HEX NUT	
24	8036757	1	AXIAL JOINT COUPLING	
25		Ref	BRAKE HOUSING, (see Figure 5-6 for details)	
26		1	STEERING CYLINDER, (includes items 101 thru 107), **(no longer available; order 70021617 for replacement), (644E Before Axle S/N 1277813), (944E Before Axle S/N 974122)**	
101	8035978	1	L-RING	
102	8036440	1	TUBE WELDMENT	
103	8036439	1	PISTON ROD	
104	8035998	1	SLOTTED NUT	
105	8035980	1	GUIDE PIECE	
106	8035981	1	SEAL KIT	
	70021617	1	STEERING CYLINDER, (includes items 201 thru 207), **(644E Axle S/N 1277813 & After), (944E Axle S/N 974122 & After)**	
201	70021571	1	L-RING	
202		1	CYLINDER TUBE	
203	70021568	1	PISTON ROD	
204	70021570	1	SLOTTED NUT	
205	70021569	1	GUIDE PIECE	
206	70021726	2	RETAINING RING	
207	70021495	1	STEERING CYLINDER SEAL KIT	
			NOTE: ITEM NUMBERS NOT LISTED ARE NOT USED ON THIS FIGURE	

Figure 5-5 Front Axle - Axle Casing

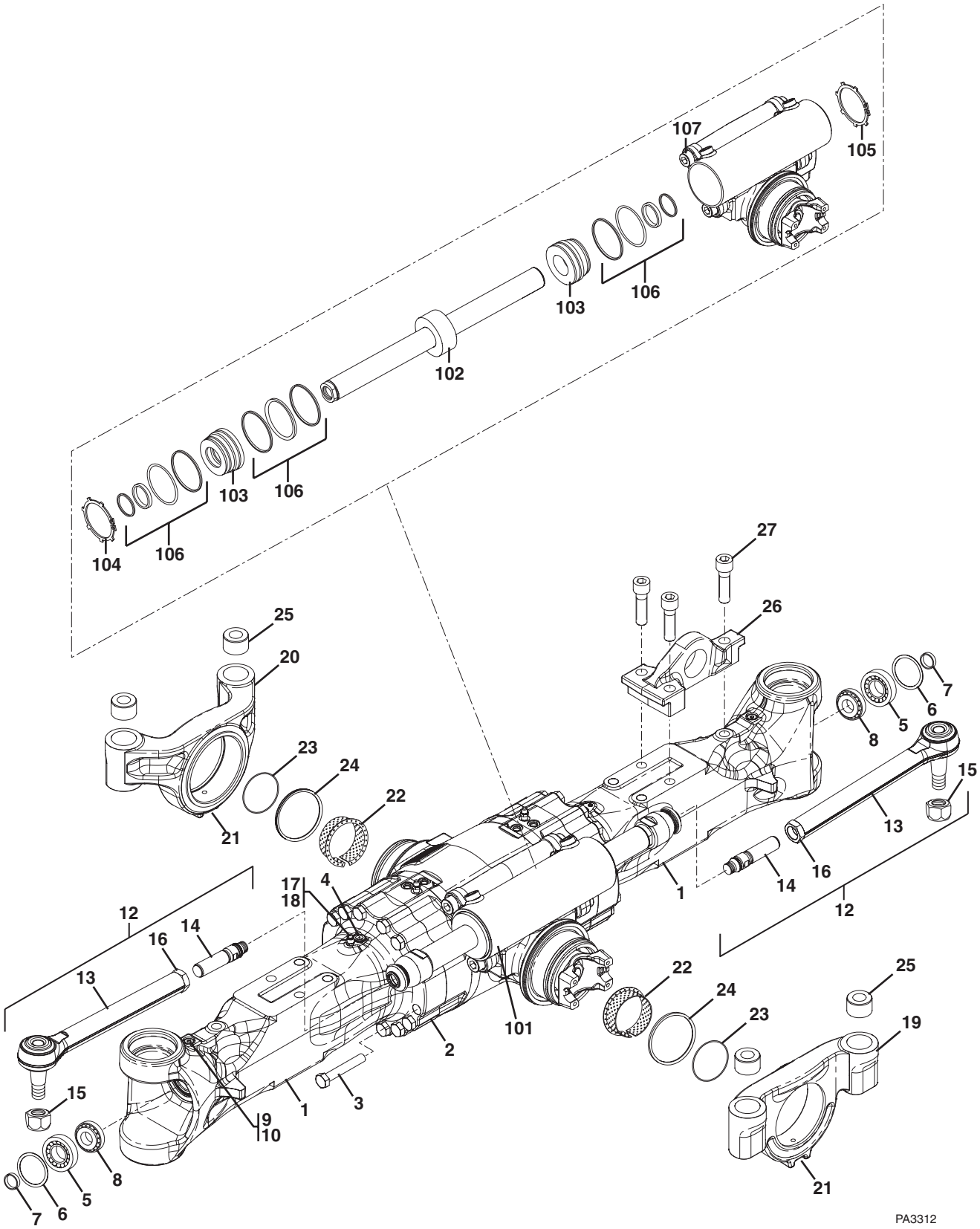

Figure 5-5 Front Axle - Axle Casing

Item	Part Number	Qty.	Description	Rev.
1	70022255	2	AXLE CASING	
2	70022259	1	AXLE DRIVE HOUSING	
3	70022206	28	HEX HD CAPSCREW, M18X180	
4	1319578	4	SCREW PLUG	
5	70022241	2	BUSHING	
6	70022204	2	O-RING	
7	70022217	2	RING	
8	10731790	2	BEARING	
9	70022201	2	SET SCREW, M10X1X16	
10	1319666	2	SCREW PLUG	
	7027217	2	O-RING	
12	70022174	2	TIE ROD, (includes items 13 thru 16)	
13	70022175	1	BALL JOINT	
14	70022172	1	AXIAL JOINT	
15	8036758	1	LOCKNUT	
16	8036759	1	HEX NUT	
17	1319436	1	BREATHER	
18	8036418	1	SCREW PLUG	
19	70022246	1	BRACKET	
20	70022247	1	BRACKET	
21	1319423	2	GREASE FITTING	
22	70022182	2	FLANGE BUSHING	
23	70022205	2	O-RING	
24	70022219	2	V-RING	
25	1319441	4	BUSHING	
26	70022254	1	BRACKET	
27	1001103619	3	HEX HD CAPSCREW, M22X1.5X80	
101	70022173	1	STEERING CYLINDER, (includes items 102 thru 106)	
102	70022177	1	PISTON ROD	
103	70022184	2	BREAK HEAD	
104	70022181	2	RETAINING RING	
105	70022180	2	RETAINING RING	
106	70022178	1	SEAL KIT	
107	70022210	4	CAPSCREW, M22X1.5X55	
			NOTE: ITEM NUMBERS NOT LISTED ARE NOT USED ON THIS FIGURE	

Figure 5-6 Front Axle - M-Disc Brake

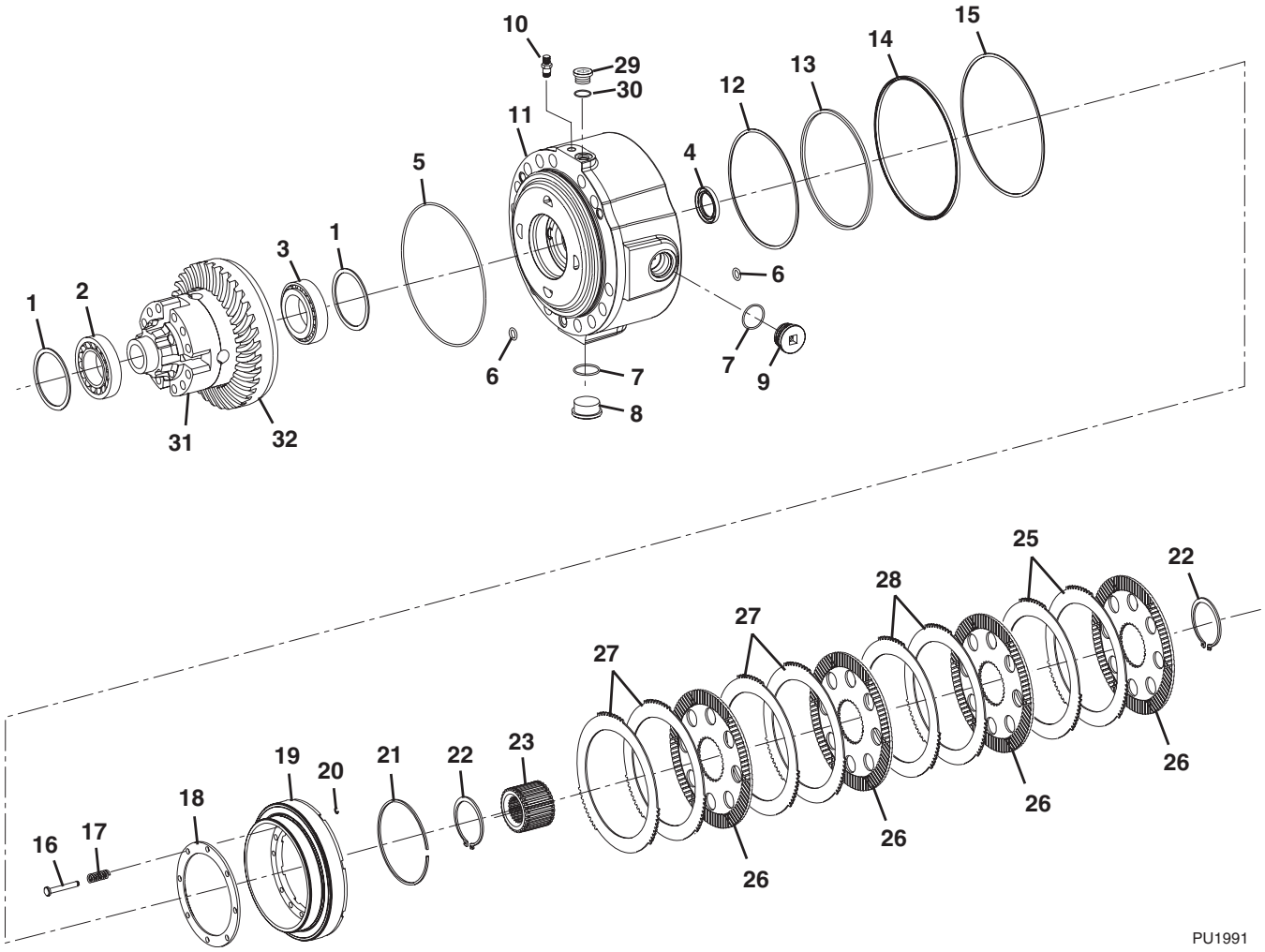

Figure 5-6 Front Axle - M-Disc Brake

Item	Part Number	Qty.	Description	Rev.
1	1319531	AR	SHIM, 0.1mm	
	8035945	AR	SHIM, 0.15mm	
	1319530	AR	SHIM, 0.2mm	
	8035946	AR	SHIM, 0.25mm	
	1319529	AR	SHIM, 0.3mm	
	8035947	AR	SHIM, 0.35mm	
	8035951	AR	SHIM, 0.4mm	
	1319543	AR	SHIM, 0.45mm	
	1319527	AR	SHIM, 0.5mm	
	1321158	AR	SHIM, 0.55mm	
	1319526	AR	SHIM, 0.6mm	
	1319532	AR	SHIM, 0.65mm	
	1319533	AR	SHIM, 0.7mm	
	1319534	AR	SHIM, 0.75mm	
	1319525	AR	SHIM, 0.8mm	
	1319535	AR	SHIM, 0.85mm	
	1319536	AR	SHIM, 0.9mm	
	1319537	AR	SHIM, 0.95mm	
	1319524	AR	SHIM, 1.0mm	
	1319545	AR	SHIM, 1.05mm	
	1319538	AR	SHIM, 1.10mm	
	1319539	AR	SHIM, 1.15mm	
	1319523	AR	SHIM, 1.20mm	
	1319540	AR	SHIM, 1.25mm	
	1319541	AR	SHIM, 1.30mm	
	1319542	AR	SHIM, 1.35mm	
	1319522	AR	SHIM, 1.40mm	
	1319521	AR	SHIM, 1.45mm	
	1319520	AR	SHIM, 1.50mm	
	1319519	AR	SHIM, 1.55mm	
	1319518	AR	SHIM, 1.60mm	
	1319517	AR	SHIM, 1.65mm	
	1319510	AR	SHIM, 2.0mm	
	1321159	AR	SHIM, 1.47mm	
	8035948	AR	SHIM, 1.63mm	
	1319516	AR	SHIM, 1.70mm	
	1319515	AR	SHIM, 1.75mm	
	1319514	AR	SHIM, 1.80mm	
	1319513	AR	SHIM, 1.85mm	
	1319512	AR	SHIM, 1.90mm	
	1319511	AR	SHIM, 1.95mm	
2	8036445	2	ROLLER BEARING	
3	8036447	2	ROLLER BEARING	
4	8036444	2	SHAFT SEAL	
5	1319425	2	O-RING	
6	1319491	12	O-RING	
7	8036331	4	O-RING	
8	8036846	2	SCREW PLUG	
9	1319506	2	SCREW PLUG	

Figure 5-6 Front Axle - M-Disc Brake (Continued)

Item	Part Number	Qty.	Description	Rev.
10	1319505	2	BREATHER	
11	8035936	1	BRAKE HOUSING, (right side), **(Before Axle S/N 675668)**	
	70020483	1	BRAKE HOUSING, (right side), **(Axle S/N 675668 & After)**	
	8035939	1	BRAKE HOUSING, (left side), **(Before Axle S/N 675668)**	
	70020484	1	BRAKE HOUSING, (left side), **(Axle S/N 675668 & After)**	
12	1321151	2	SUPPORT RING	
13	1321162	2	U-RING	
14	1321163	2	U-RING	
15	1321152	2	SUPPORT RING	
16	1319496	16	PIN	
17	1319497	16	COMPRESSION SPRING	
18	8036305	2	WASHER	
19	8036304	2	PISTON	
20	1319499	16	CRESCENT RING	
21	1319504	2	SNAP RING	
22	10731949	4	RETAINING RING	
23	1321174	2	DISC CARRIER, **(Before Axle S/N 823842)**	
	70020409	1	DISC CARRIER, **(Axle S/N 823842 & After)**	
25	1319500	4	O. CLUTCH DISC, 2.0mm, **(Before Axle S/N 675668)**	
	70020485	4	O. CLUTCH DISC, 2.0mm, **(Axle S/N 675668 & After)**	
	1319501	4	O. CLUTCH DISC, 2.5mm, **(Before Axle S/N 675668)**	
	70020486	4	O. CLUTCH DISC, 2.5mm, **(Axle S/N 675668 & After)**	
	1319502	4	O. CLUTCH DISC, 3.0mm, **(Before Axle S/N 675668)**	
	70020487	4	O. CLUTCH DISC, 3.0mm, **(Axle S/N 675668 & After)**	
26	1321150	10	I. CLUTCH DISC, **(Before Axle S/N 823842)**	
	70020408	4	I. CLUTCH DISC, **(Axle S/N 823842 & After)**	
27	1319502	8	O. CLUTCH DISC, 3.0mm, **(Before Axle S/N 675668)**	
	70020487	8	O. CLUTCH DISC, 3.0mm, **(Axle S/N 675668 & After)**	
28	1319501	4	O. CLUTCH DISC, 2.5mm, **(Before Axle S/N 675668)**	
	70020486	4	O. CLUTCH DISC, 2.5mm, **(Axle S/N 675668 & After)**	
29	1319666	2	SCREW PLUG	
30	7027217	2	O-RING	
31		Ref	LIMITED SLIP DIFFERENTIAL, (see Figure 5-4 for details)	
32		Ref	GEAR SET BEVEL, (see Figure 5-3 for details)	
			NOTE: ITEM NUMBERS NOT LISTED ARE NOT USED ON THIS FIGURE	

Figure 5-6 Front Axle - M-Disc Brake (Continued)

Item	Part Number	Qty.	Description	Rev.

Figure 5-6 Front Axle - M-Disc Brake

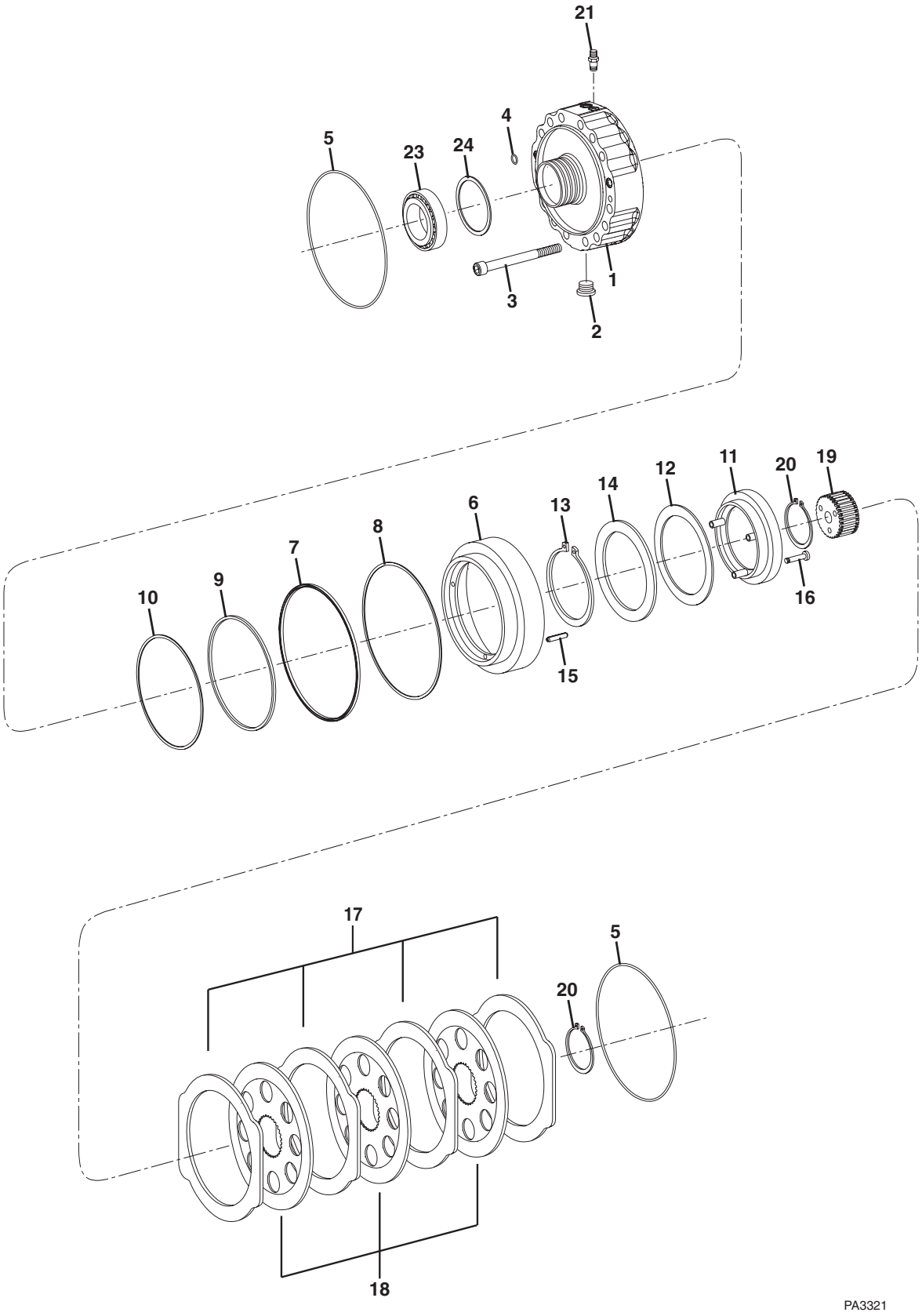

Figure 5-6 Front Axle - M-Disc Brake

Item	Part Number	Qty.	Description	Rev.
1	70022282	2	BRAKE HOUSING	
2	1319578	2	SCREW PLUG	
3	70022209	6	CAP SCREW, M12X105	
4	8036847	10	O-RING	
5	80304462	4	O-RING	
6	70022250	2	PISTON	
7	70022190	2	PISTON PACKING	
8	70022193	2	BACKUP RING	
9	70022189	2	PISTON PACKING	
10	70022194	2	BACKUP RING	
11	70022236	2	RING	
12	70022183	2	CUP SPRING	
13	70022198	2	RETAINING RING	
14	70022235	2	WASHER	
15	70022186	8	SLOT PIN	
16	1319214	6	CAP SCREW, M8X40	
17	70022196	8	O.CLUTCH DISC	
18	70022176	6	I.CLUTCH DISC	
19	70022253	2	DISC CARRIER	
20	10731949	4	RETAINING RING	
21	70022171	2	BREATHER	
22	70022215	2	SCREW PLUG, (not shown)	
23	70022222	2	BEARING	
24	1319537	A/R	SHIM, A=0.95	
	1319545	A/R	SHIM, A=1.05	
	1319539	A/R	SHIM, A=1.15	
	1319540	A/R	SHIM, A=1.25	
	1319542	A/R	SHIM, A=1.35	

Figure 5-7 Front Axle - Brake

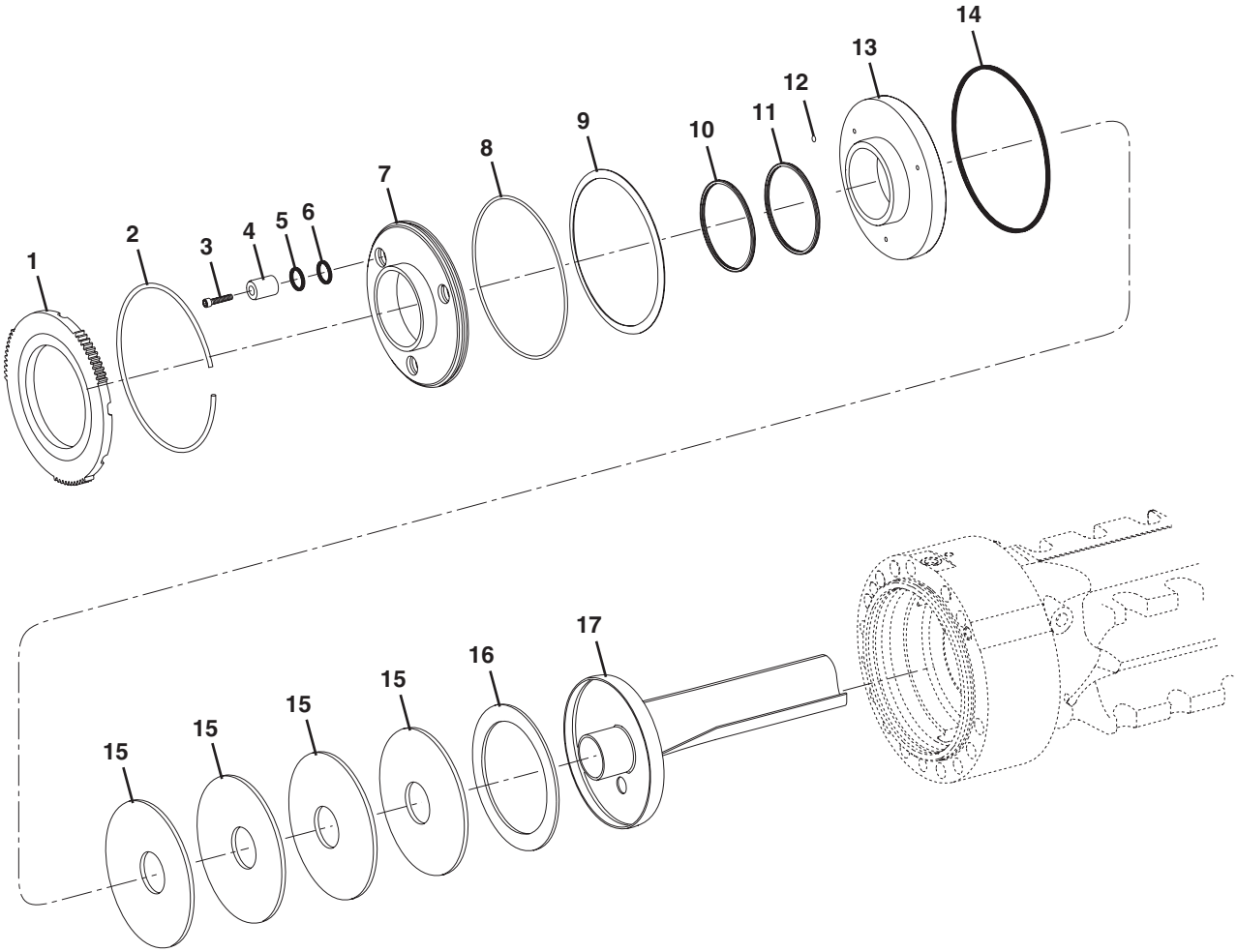

Figure 5-7 Front Axle - Brake

Item	Part Number	Qty.	Description	Rev.
1	8036848	2	END SHIM, **(Before Axle S/N 675668)**	
	70020413	2	END SHIM, **(Axle S/N 675668 & After)**	
2	1321206	2	SNAP RING	
3	8036321	6	CAP SCREW	
4	8036858	6	PRESSURE PIN	
5	8036862	6	O-RING	
6	8036861	6	U-RING	
7	8036849	2	SEALING WASHER	
8	8036320	2	O-RING	
9	1321208	2	CUP SPRING	
10	8036855	2	BACKUP RING	
11	8036318	2	U-RING	
12	8036859	6	BACKUP RING	
13	7027212	2	PISTON	
14	8036852	2	U-RING	
15	1321207	8	CUP SPRING	
16	8035958	2	SPACING WASHER	
17	8036856	2	OIL DAM	
	7029104	AR	BRAKE SEAL KIT, (contains quantity of 1 each of items 1, 2, 7 thru 11, 13, 14, 17; quantity of 3 each of items 3 thru 6, 12 and 1 of item 9 from Figure 5-5)	

Figure 5-7 Front Axle - Brake

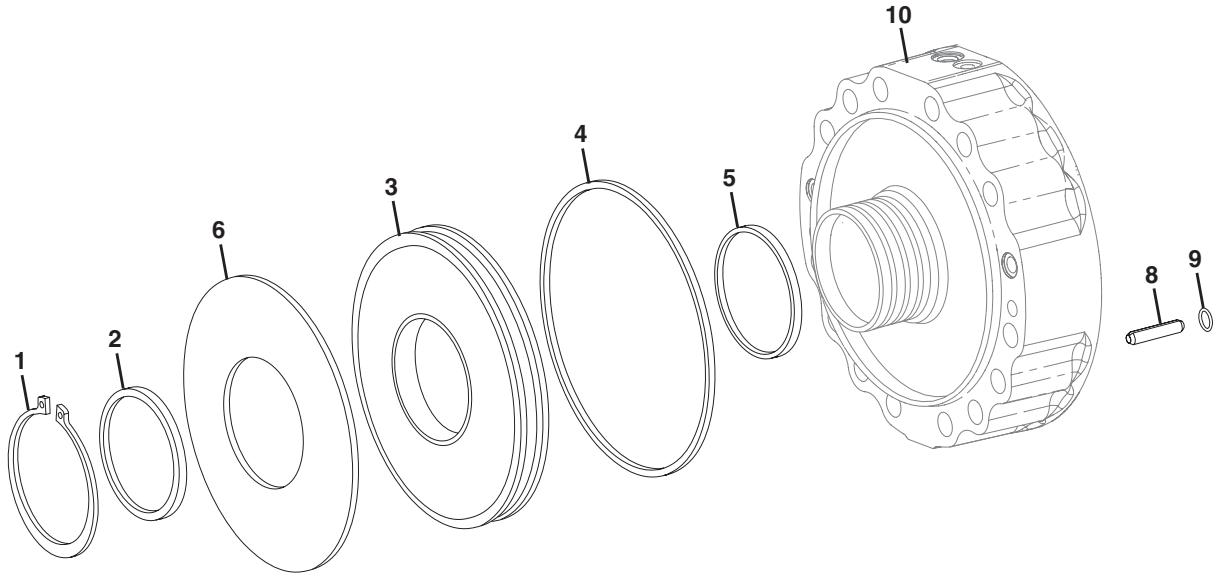

PA3331

Figure 5-7 Front Axle - Brake

Item	Part Number	Qty.	Description	Rev.
1	70022199	2	SNAP RING	
2	70022252	2	WASHER	
3	70022251	2	PISTON	
4	70022191	2	PISTON PACKING	
5	70022192	2	ROD SEAL	
6	70022195	2	CUP SPRING	
7	70022215	2	SCREW PLUG, (not shown)	
8	70022248	14	PRESSURE PIN	
9	70022202	14	O-RING	
10		Ref	BRAKE HOUSING, (see Figure 5-6 for details)	

Figure 5-8 Front Axle - Joint Housing

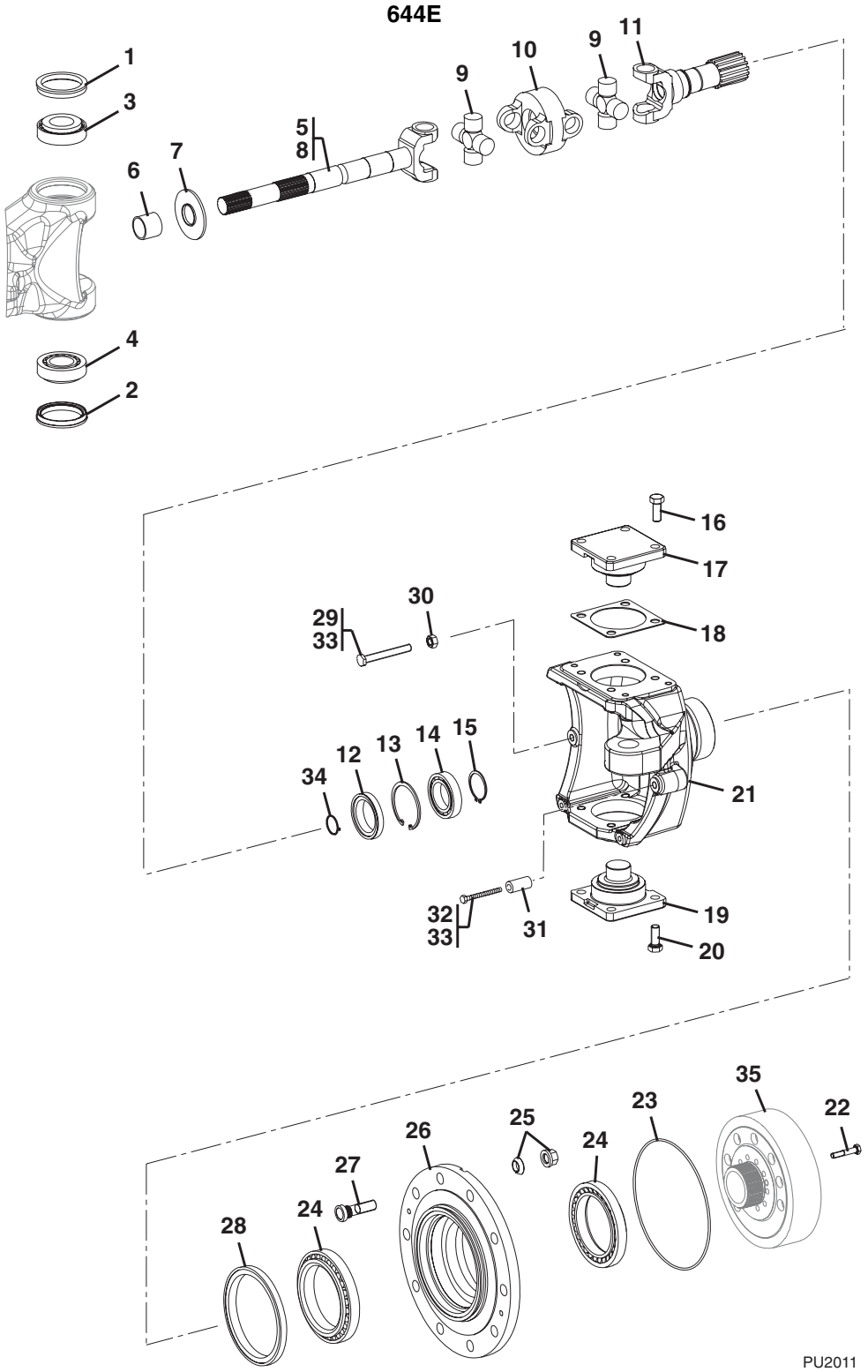

Figure 5-8 Front Axle - Joint Housing

Item	Part Number	Qty.	Description	Rev.
1	8036338	2	MULTI SEAL RING	
2	1319447	2	SHAFT SEAL	
3	1319444	2	ROLLER BEARING	
4	1319445	2	ROLLER BEARING	
5	7027218	2	DRIVESHAFT UNIVERSAL COUPLING, (includes items 6 thru 11), **(Before Axle S/N 720124)**	
	7028979	2	DRIVESHAFT UNIVERSAL COUPLING, (includes items 6 thru 11), **(Axle S/N 720125 & After)**	
6	8035973	1	BUSHING	
7	8035996	1	SCREEN SHEET	
8	7027221	1	JOINT FORK, **(Before Axle S/N 720124)**	
	8035995	1	JOINT FORK, **(Axle S/N 720125 & After)**	
9	7027222	2	JOINT CROSS, **(Before Axle S/N 720124)**	
	70021554	2	JOINT CROSS, **(Axle S/N 720125 & After)**	
10	7027219	1	CENTRAL PIECE, **(Before Axle S/N 720124)**	
	70021553	1	CENTRAL PIECE, **(Axle S/N 720125 & After)**	
11	7027220	1	JOINT FORK, **(Before Axle S/N 720124)**	
	8035994	1	JOINT FORK, **(Axle S/N 720125 & After)**	
12	7028977	2	SHAFT SEAL	
13	1319210	2	RETAINING RING	
14	1321157	2	BALL BEARING	
15	80304405	2	RETAINING RING	
16	1319463	8	HEX SCREW	
17	1319461	2	BEARING PIN	
18	1319448	AR	SHIM, 0.2mm	
	1319449	AR	SHIM, 0.3mm	
	1319450	AR	SHIM, 0.4mm	
	1319460	AR	SHIM, 0.5mm	
	1319451	AR	SHIM, 0.6mm	
	1319459	AR	SHIM, 0.7mm	
	1319452	AR	SHIM, 0.8mm	
	1319453	AR	SHIM, 1.0mm	
	1319454	AR	SHIM, 1.2mm	
	1319455	AR	SHIM, 1.4mm	
	1319456	AR	SHIM, 1.6mm	
	1319457	AR	SHIM, 1.8mm	
	1319458	AR	SHIM, 2.0mm	
19	1319462	2	BEARING PIN	
20	1319464	8	HEX SCREW	
21	1321245	1	JOINT HOUSING, (right side)	
	1321246	1	JOINT HOUSING, (left side)	
22	8035997	20	HEX SCREW	
23	1319470	2	O-RING	
24	1319472	4	ROLLER BEARING	
25	8024036	16	WHEEL NUT & SPERICAL WASHER SERVICE KIT	
26	8036435	2	HUB	
27	8036434	16	WHEEL BOLT, (stud)	
28	80304173	2	SHAFT SEAL	
29	8036610	2	STOP SCREW	

Figure 5-8 Front Axle - Joint Housing

Item	Part Number	Qty.	Description	Rev.
30	1319477	2	NUT	
31	8036413	2	SPACER TUBE, (used w/rock tires only)	
32	8036330	2	STOP SCREW	
33	8526007	AR	LOCTITE, #242, (apply to items 29 & 32)	
34	1321226	2	RETAINING RING	
35		Ref	RING GEAR, (see Figure 5-9 for details)	

Figure 5-8 Front Axle - Joint Housing

Item	Part Number	Qty.	Description	Rev.

Figure 5-8 Front Axle - Joint Housing

944E

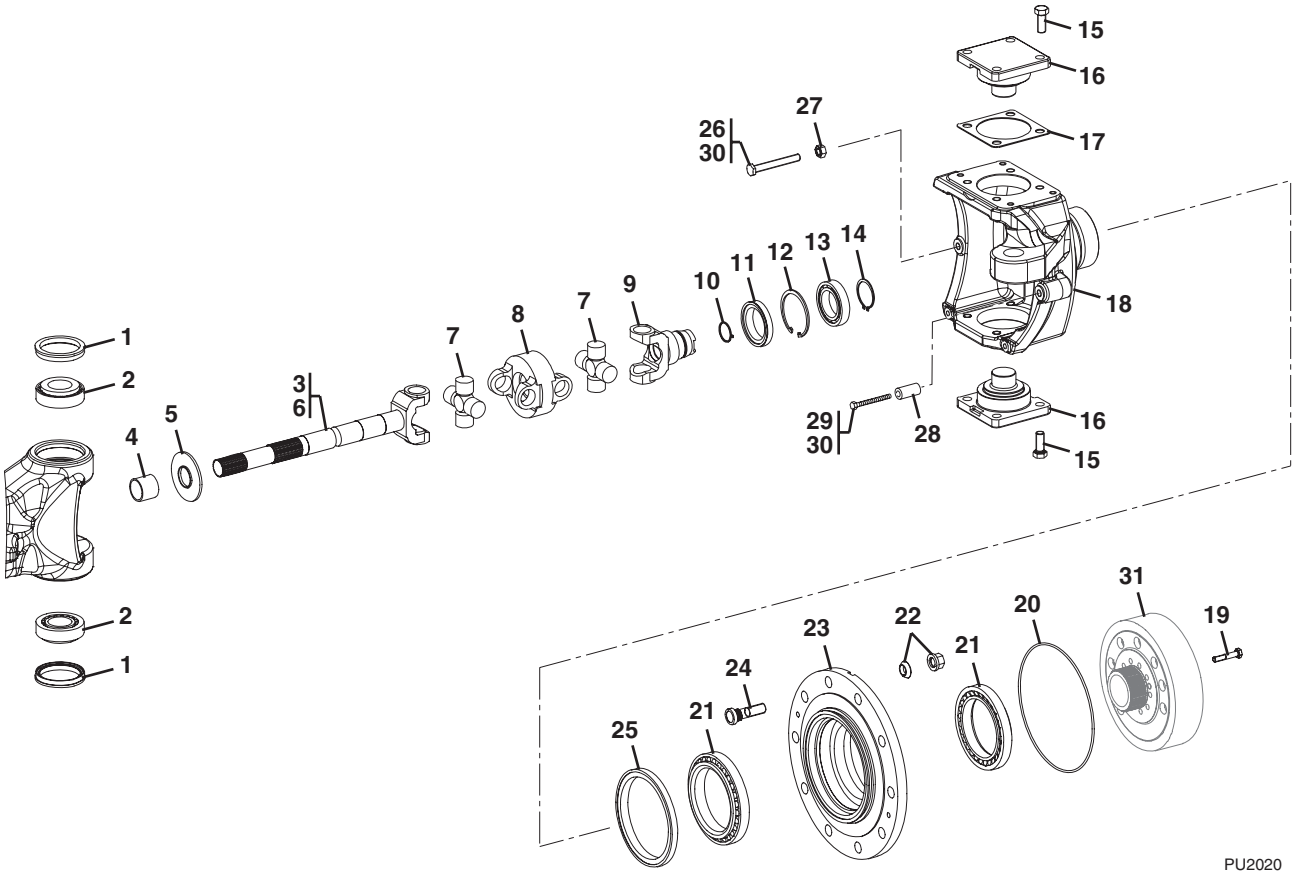

PU2020

Figure 5-8 Front Axle - Joint Housing

Item	Part Number	Qty.	Description	Rev.
1	1319447	4	SHAFT SEAL	
2	1319445	4	ROLLER BEARING	
3	1321175	2	DRIVESHAFT UNIVERSAL COUPLING, (includes items 4 thru 9)	
4	8035973	1	BUSHING	
5	8035974	1	SCREENSHEET	
6	8035972	1	JOINT COUPLING FORK	
7	8035970	2	JOINT CROSS, **(Before Axle S/N 755242)**	
	70021790	2	JOINT CROSS, **(Axle S/N 755242 & After)**	
8	8035969	1	CENTRAL PIECE, **(Before Axle S/N 755242)**	
	70021789	1	CENTRAL PIECE, **(Axle S/N 755242 & After)**	
9	8035971	1	JOINT FORK	
10	1321228	2	RETAINING RING	
11	7028977	2	SHAFT SEAL	
12	1319210	2	RETAINING RING	
13	1321157	2	BALL BEARING	
14	80304405	2	RETAINING RING	
15	1319464	16	HEX SCREW	
16	1319462	4	BEARING PIN	
17	1321249	AR	SHIM, 0.2mm	
	8035959	AR	SHIM, 0.3mm	
	8035960	AR	SHIM, 0.4mm	
	8035961	AR	SHIM, 0.5mm	
	8035962	AR	SHIM, 0.6mm	
	1321250	AR	SHIM, 0.7mm	
	8035963	AR	SHIM, 0.8mm	
	8035964	AR	SHIM, 1.0mm	
	8035965	AR	SHIM, 1.2mm	
	8035966	AR	SHIM, 1.4mm	
	1321251	AR	SHIM, 1.6mm	
	8035967	AR	SHIM, 1.8mm	
	8035968	AR	SHIM, 2.0mm	
18	1321256	1	JOINT HOUSING, (right side)	
	1321257	1	JOINT HOUSING, (left side)	
19	8036866	20	HEX SCREW	
20	1321155	2	O-RING	
21	1319472	4	ROLLER BEARING	
22	8024036	20	WHEEL NUT & SPERICAL WASHER SERVICE KIT	
23	1321254	2	HUB	
24	8036434	20	WHEEL BOLT, (stud)	
25	80304173	2	SHAFT SEAL	
26	1319476	2	STOP SCREW	
27	1319477	2	NUT	
28	8036413	2	SPACER TUBE, (used w/rock tires only)	
29	8036330	2	STOP SCREW	
30	8526007	AR	LOCTITE, (apply to items 26 & 29)	
31		Ref	RING GEAR, (see Figure 5-9 for details)	

Figure 5-8 Front Axle - Joint Housing

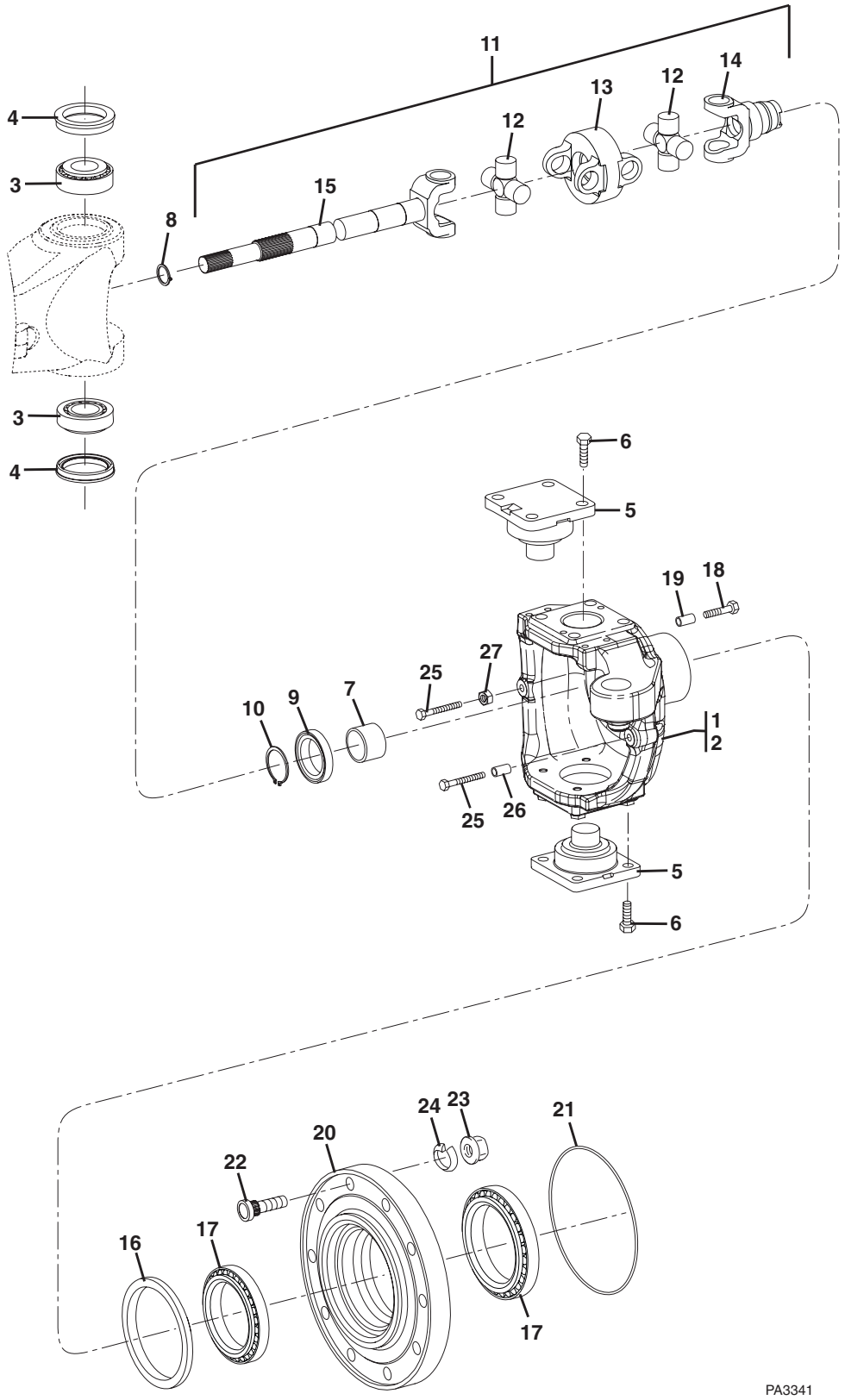

Figure 5-8 Front Axle - Joint Housing

Item	Part Number	Qty.	Description	Rev.
1	70022237	1	JOINT HOUSING, (right side)	
2	70022238	1	JOINT HOUSING, (left side)	
3	70022223	4	ROLLER BEARING	
4	1319447	4	SHAFT SEAL	
5	70022240	4	BEARING PIN	
6	1319464	16	HEX SCREW, M16X40	
7	70022179	2	BUSHING	
8	10731789	2	RETAINING RING	
9	70022218	2	SHAFT SEAL	
10	1321226	2	RETAINING RING	
11	70022170	2	UNIVERSAL COUPLING DRIVE SHAFT ASSY, **(644E)**, (includes items 12 thru 15)	
	70022265	2	UNIVERSAL COUPLING DRIVE SHAFT ASSY, **(944E)**, (includes items 12 thru 15)	
12	70021554	2	JOINT CROSS, **(644E)**	
	70021790	2	JOINT CROSS, **(944E)**	
13	70021553	1	CENTRAL PIECE, **(644E)**	
	70022268	1	CENTRAL PIECE, **(944E)**	
14	70022187	1	FORK SHAFT, **(644E)**	
	70022266	1	FORK SHAFT, **(944E)**	
15	70022188	1	FORK SHAFT, **(644E)**	
	70022267	1	FORK SHAFT, **(944E)**	
16	80304173	2	SHAFT SEAL	
17	1319472	4	ROLLER BEARING	
18	70022208	16	HEX SCREW, M14X70	
19	70022234	16	CENTERING BUSHING	
20	70022249	2	HUB	
21	70022203	2	O-RING	
22	70022230	20	WHEEL BOLT	
23		Ref	WHEEL NUT, (see Figure 5-1 for details)	
24		Ref	SPRING WASHER, (see Figure 5-1 for details)	
25	8036330	4	STOP SCREW, M14X1.5	
26	70022257	2	SPACER TUBE	
27	1319477	2	HEX NUT, M14X1.5	

Figure 5-9 Front Axle - Planetary Drive

644E

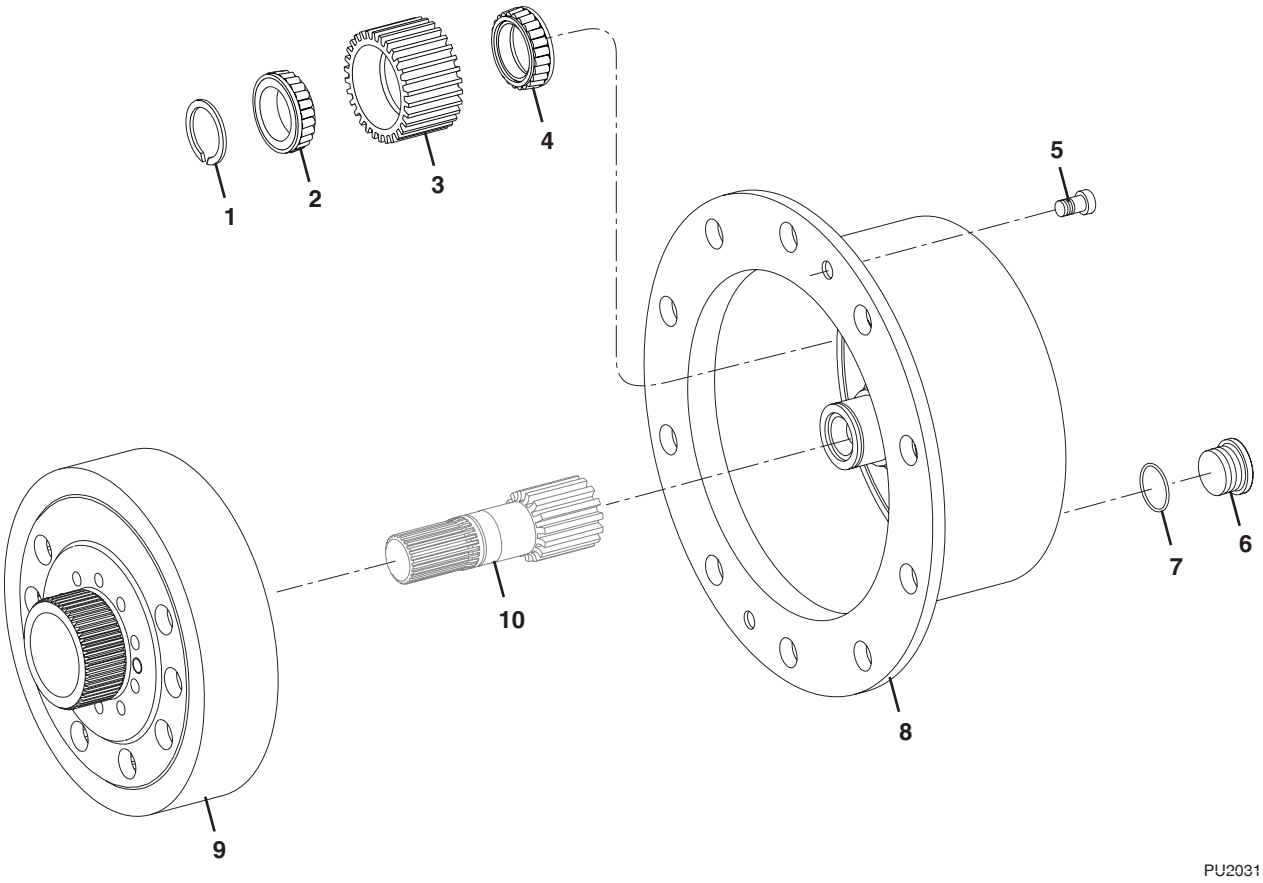

Figure 5-9 Front Axle - Planetary Drive

Item	Part Number	Qty.	Description	Rev.
1	1319485	6	SNAP RING	
2	1319484	6	INNER RING BEARING	
3	1321231	6	PLANET GEAR	
4	1319483	6	INNER RING BEARING	
5	1319488	4	CAP SCREW	
6	1319506	2	SCREW PLUG	
7	8036331	2	O-RING	
8	8036436	2	PLANET CARRIER	
9	1321247	2	RING GEAR	
10	1321242	2	SUN GEAR SHAFT	
	70021555	1	PLANET CARRIES ASSY (includes items 3, 4, 5 & 8)	

Figure 5-9 Front Axle - Planetary Drive

944E

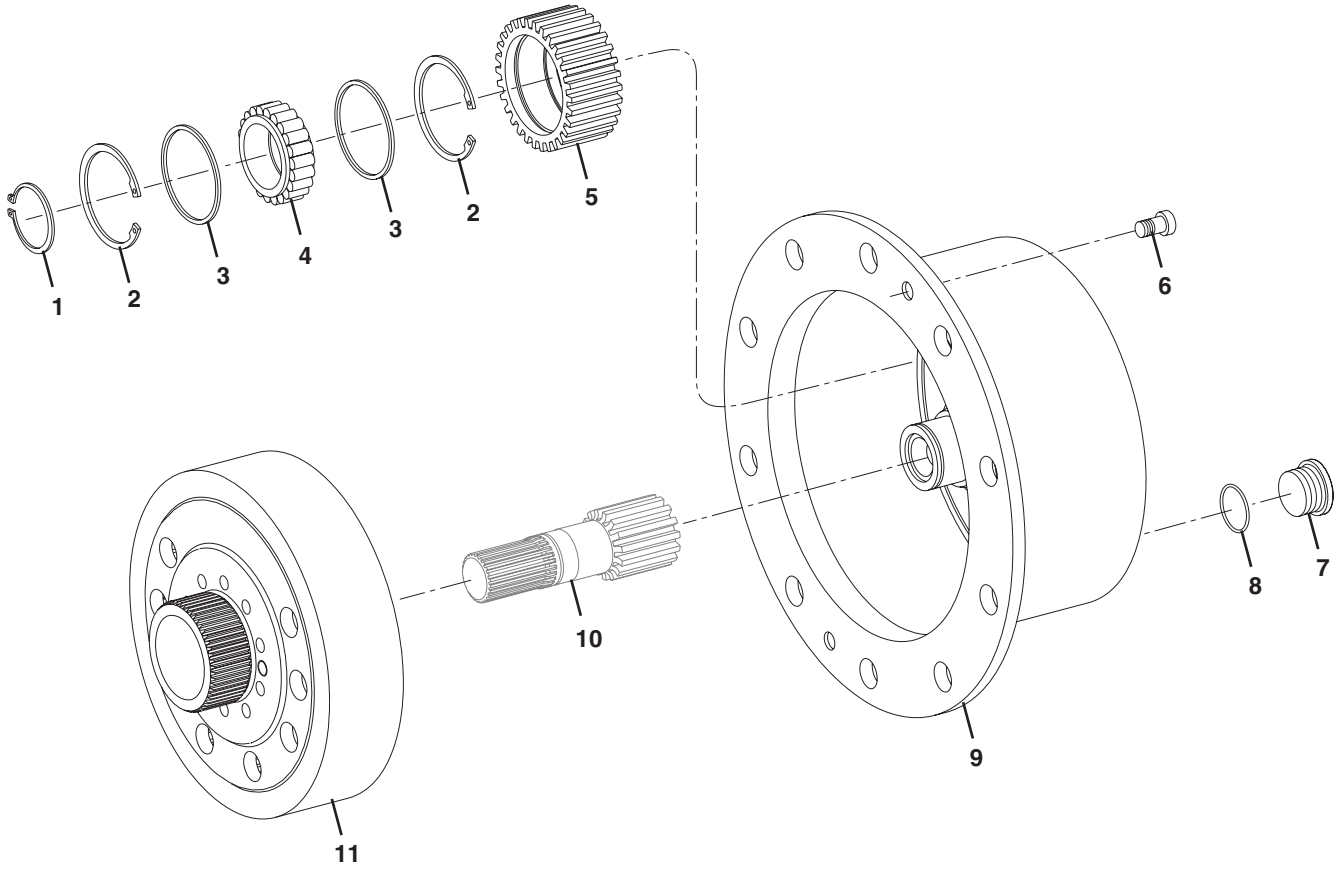

PU2040

Figure 5-9 Front Axle - Planetary Drive

Item	Part Number	Qty.	Description	Rev.
1	80304227	3	RETAINING RING	
2	1321205	6	SNAP RING	
3	1321191	6	WASHER	
4	1321214	3	ROLLER BEARING	
5	1321233	3	PLANET GEAR	
6	8035977	2	CAP SCREW	
7	1319506	1	SCREW PLUG	
8	8036331	1	O-RING	
9	1321232	1	PLANET CARRIER	
10	1321255	1	SUN GEAR SHAFT	
11	1321258	1	RING GEAR	

Figure 5-9 Front Axle - Planetary Drive

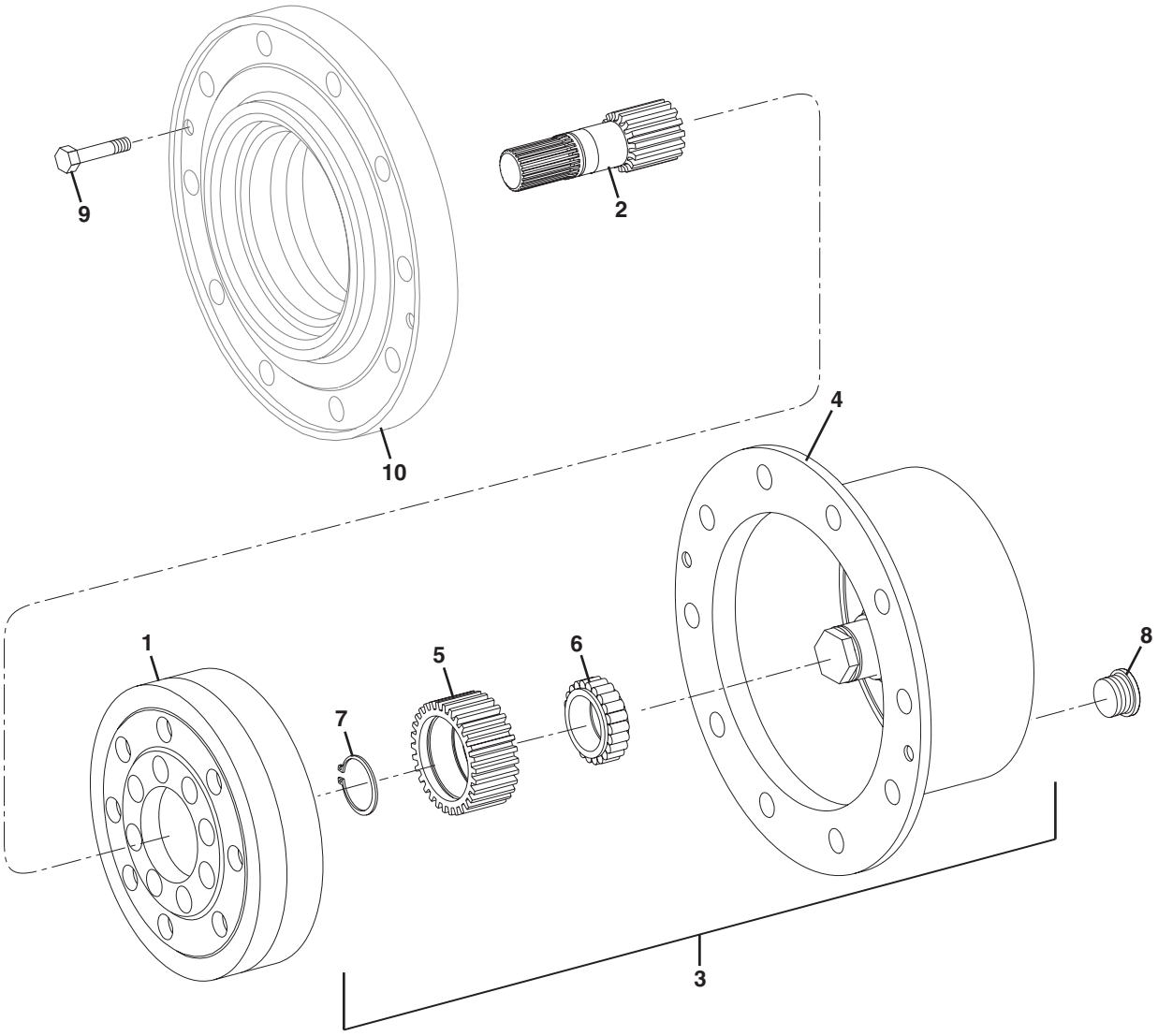

Figure 5-9 Front Axle - Planetary Drive

Item	Part Number	Qty.	Description	Rev.
1	70022242	1	RING GEAR, **(644E)**	
	70022274	1	RING GEAR, **(944E)**	
2	70022239	2	SUN GEAR SHAFT, **(644E)**	
	70022278	2	SUN GEAR SHAFT, **(944E)**	
3	70022233	2	PLANETARY CARRIER ASSY,**(644E),** (includes items 4 thru 7)	
	70022273	2	PLANETARY CARRIER ASSY, **(944E)**, (includes items 4 thru 7)	
4	70022256	1	PLANETARY CARRIER, **(644E)**	
	70022279	1	PLANETARY CARRIER, **(944E)**	
5	70022243	3	PLANETARY GEAR, **(644E)**	
	70022271	3	PLANETARY GEAR, **(944E)**	
6	70022221	3	CYL. ROLLER BEARING, **(644E)**	
	70022270	3	CYL. ROLLER BEARING, **(944E)**	
7	70022197	3	RETAINING RING	
8	1319578	2	SCREW PLUG	
9	70022207	4	HEX SCREW, M12X30	
10		Ref	HUB, (see Figure 5-8 for details)	

Figure 5-10 Rear Axle

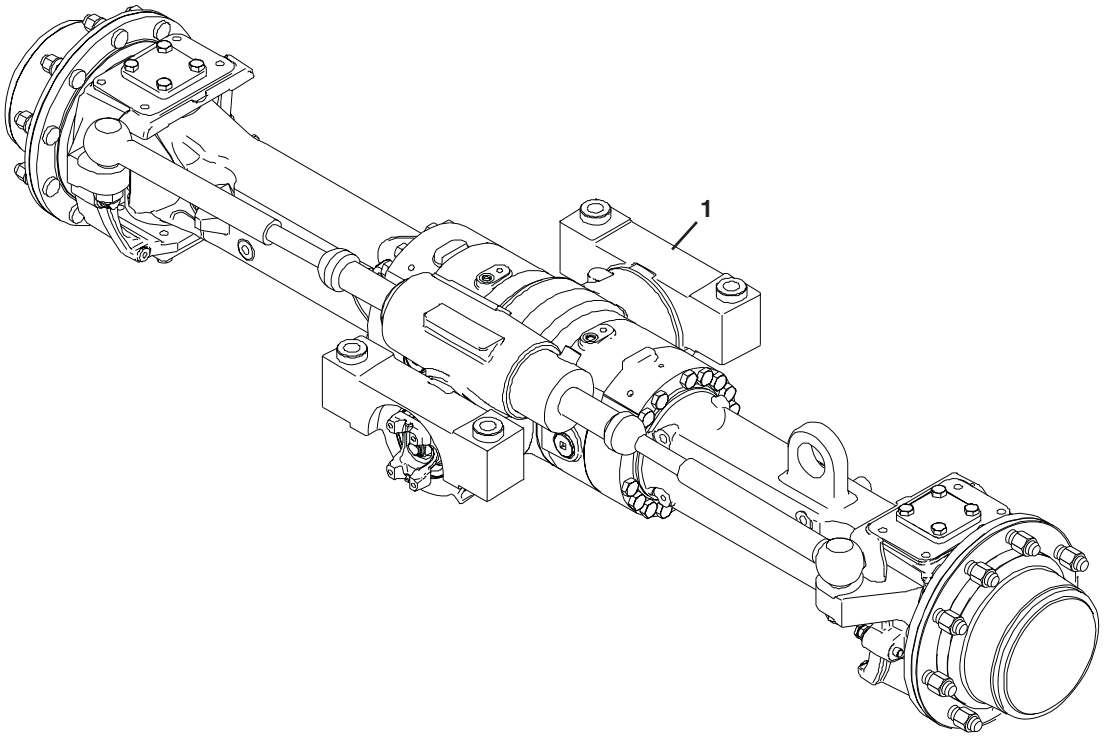

PA3930

Figure 5-10 Rear Axle

Item	Part Number	Qty.	Description	Rev.
1	8040284	1	REAR AXLE, **(644-E excluding S/N 0160036724, 0160036811, 0160036907 & 0160037012)**	
	8040287	1	REAR AXLE, **(944-E excluding S/N 0160034634, 0160036710, 0160036722, 0160036735 & 0160036738)**	
	1001103631	1	REAR AXLE, **(644-E S/N 0160036724, 0160036811, 0160036907 & 0160037012), (944-E S/N 0160034634, 0160036710, 0160036722, 0160036735 & 0160036738)**	
			INPUT, (see Figure 5-11 for details)	
			DIFFERENTIAL, (see Figure 5-12 for details)	
			AXLE CASING, (see Figure 5-13 for details)	
			M-DISC BRAKE, (see Figure 5-14 for details)	
			BRAKE, (see Figure 5-15 for details)	
			JOINT HOUSING, (see Figure 5-16 for details)	
			PLANETARY DRIVE, (see Figure 5-17 for details)	

Figure 5-11 Rear Axle - Input

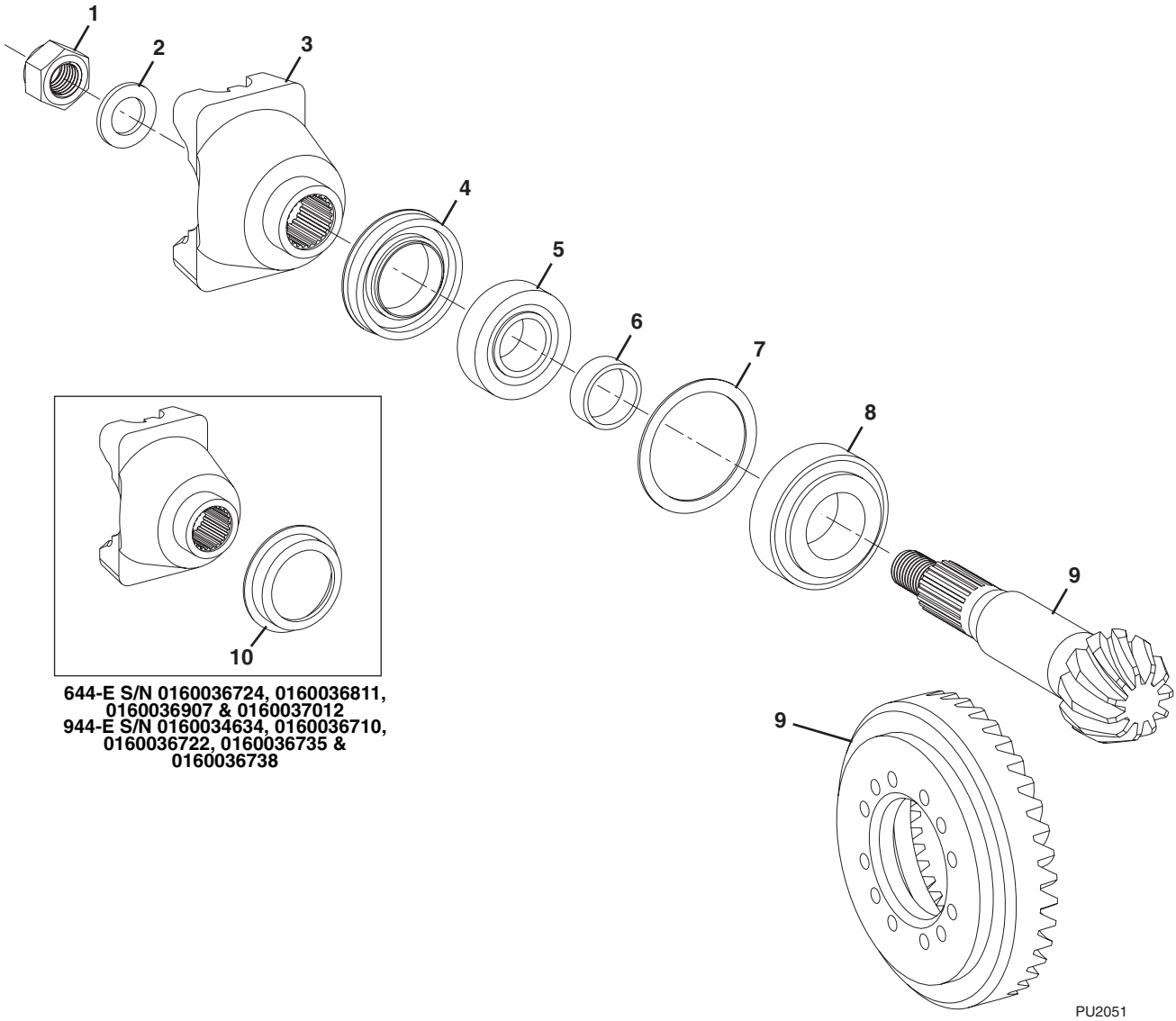

PU2050

Figure 5-11 Rear Axle - Input

Item	Part Number	Qty.	Description	Rev.
1	8035983	1	HEX NUT, **(644-E excluding S/N 0160036724, 0160036811, 0160036907 & 0160037012), (944-E excluding S/N 0160034634, 0160036710, 0160036722, 0160036735 & 0160036738)**	
	70022213	1	HEX NUT, **(644-E S/N 0160036724, 0160036811, 0160036907 & 0160037012), (944-E S/N 0160034634, 0160036710, 0160036722, 0160036735 & 0160036738)**	
2	1319406	1	WASHER, **(644-E excluding S/N 0160036724, 0160036811, 0160036907 & 0160037012), (944-E excluding S/N 0160034634, 0160036710, 0160036722, 0160036735 & 0160036738)**	
	80304082	1	WASHER, **(644-E S/N 0160036724, 0160036811, 0160036907 & 0160037012), (944-E S/N 0160034634, 0160036710, 0160036722, 0160036735 & 0160036738)**	
3	1321237	1	END YOKE, **(644-E excluding S/N 0160036724, 0160036811, 0160036907 & 0160037012), (944-E excluding S/N 0160034634, 0160036710, 0160036722, 0160036735 & 0160036738)**	
	70022245	1	END YOKE, **(644-E S/N 0160036724, 0160036811, 0160036907 & 0160037012), (944-E S/N 0160034634, 0160036710, 0160036722, 0160036735 & 0160036738)**	
4	1321211	1	SEAL SHAFT, **(644-E excluding S/N 0160036724, 0160036811, 0160036907 & 0160037012), (944-E excluding S/N 0160034634, 0160036710, 0160036722, 0160036735 & 0160036738)**	
	70022220	1	SEAL SHAFT, **(644-E S/N 0160036724, 0160036811, 0160036907 & 0160037012), (944-E S/N 0160034634, 0160036710, 0160036722, 0160036735 & 0160036738)**	
5	1319444	1	ROLLER BEARING, **(644-E excluding S/N 0160036724, 0160036811, 0160036907 & 0160037012), (944-E excluding S/N 0160034634, 0160036710, 0160036722, 0160036735 & 0160036738)**	
	1319353	1	ROLLER BEARING, **(644-E S/N 0160036724, 0160036811, 0160036907 & 0160037012), (944-E S/N 0160034634, 0160036710, 0160036722, 0160036735 & 0160036738)**	
6		AR	RING OPTIONS, **(644-E excluding S/N 0160036724, 0160036811, 0160036907 & 0160037012), (944-E excluding S/N 0160034634, 0160036710, 0160036722, 0160036735 & 0160036738)**	
	1319354	1	RING, 15.1mm	
	1319355	1	RING, 15.2mm	
	1319356	1	RING, 15.3mm	
	1319357	1	RING, 15.4mm	
	1319358	1	RING, 15.5mm	
	1319359	1	RING, 15.6mm	
	1319360	1	RING, 15.7mm	
	1319361	1	RING, 15.8mm	
	1319362	1	RING, 15.9mm	
	1319363	1	RING, 16.0mm	
	1319364	1	RING, 16.1mm	
	1319365	1	RING, 16.2mm	
	1319366	1	RING, 16.3mm	
	1319367	1	RING, 16.4mm	

Figure 5-11 Rear Axle - Input (Continued)

Item	Part Number	Qty.	Description	Rev.
	8035982	1	RING, 16.26mm	
	1319369	1	RING, 16.23mm	
	1319370	1	RING, 16.16mm	
	1319371	1	RING, 16.13mm	
	1319372	1	RING, 16.06mm	
	1319373	1	RING, 16.03mm	
	1319374	1	RING, 15.96mm	
	1319375	1	RING, 15.93mm	
	1319376	1	RING, 15.86mm	
	1319377	1	RING, 15.83mm	
	1319378	1	RING, 15.76mm	
	1319379	1	RING, 15.73mm	
	1319380	1	RING, 15.66mm	
	1319381	1	RING, 15.63mm	
	1319382	1	RING, 15.56mm	
	1319383	1	RING, 15.53mm	
	1319384	1	RING, 15.46mm	
	1319385	1	RING, 15.43mm	
	1319386	1	RING, 15.36mm	
	1319387	1	RING, 15.33mm	
	1319388	1	RING, 15.26mm	
	1319389	1	RING, 15.38mm	
	1319390	1	RING, 15.48mm	
	1319391	1	RING, 15.58mm	
	1319392	1	RING, 15.68mm	
	1319393	1	RING, 15.69mm	
	1319394	1	RING, 15.72mm	
	1319395	1	RING, 15.78mm	
	1319396	1	RING, 15.81mm	
	1319397	1	RING, 15.84mm	
	1319398	1	RING, 15.88mm	
	1319399	1	RING, 15.89mm	
	1319400	1	RING, 15.91mm	
	1319401	1	RING, 15.94mm	
	1319402	1	RING, 15.97mm	
		AR	RING OPTIONS, **(644-E S/N 0160036724, 0160036811, 0160036907 & 0160037012), (944-E S/N 0160034634, 0160036710, 0160036722, 0160036735 & 0160036738)**	
	80304088	1	RING, S=16.0	
	80304089	1	RING, S=16.1	
	80304090	1	RING, S=16.2	
	80304091	1	RING, S=16.3	
	80304092	1	RING, S=16.4	
	80304093	1	RING, S=16.5	
	80304110	1	RING, S=16.56	
	80304094	1	RING, S=16.6	
	80304111	1	RING, S=16.62	
	80304112	1	RING, S=16.64	
	80304124	1	RING, S=16.66	

Figure 5-11 Rear Axle - Input (Continued)

Item	Part Number	Qty.	Description	Rev.
	80304113	1	RING, S=16.68	
	80304095	1	RING, S=16.7	
	70022216	1	RING, S=16.72	
	80304115	1	RING, S=16.74	
	80304117	1	RING, S=16.76	
	80304118	1	RING, S=16.78	
	80304096	1	RING, S=16.8	
	80304119	1	RING, S=16.82	
	80304120	1	RING, S=16.84	
	80304104	1	RING, S=16.86	
	80304121	1	RING, S=16.88	
	80304122	1	RING, S=16.9	
	80304097	1	RING, S=16.92	
	80304123	1	RING, S=16.94	
	80304125	1	RING, S=16.96	
	80304107	1	RING, S=16.98	
	80304126	1	RING, S=17.0	
	80304127	1	RING, S=17.02	
	80304108	1	RING, S=17.04	
	80304128	1	RING, S=17.06	
	80304129	1	RING, S=17.08	
	80304099	1	RING, S=17.10	
	80304130	1	RING, S=17.12	
	80304131	1	RING, S=17.14	
	80304132	1	RING, S=17.16	
	80304133	1	RING, S=17.18	
	80304100	1	RING, S=17.2	
	80304134	1	RING, S=17.22	
	80304135	1	RING, S=17.24	
	80304136	1	RING, S=17.26	
	80304137	1	RING, S=17.28	
	80304101	1	RING, S=17.3	
	80304102	1	RING, S=17.4	
7		AR	SHIM OPTIONS, **(644-E excluding S/N 0160036724, 0160036811, 0160036907 & 0160037012), (944-E excluding S/N 0160034634, 0160036710, 0160036722, 0160036735 & 0160036738)**	
	1319333	AR	SHIM, 1.0mm	
	1319334	AR	SHIM, 1.05mm	
	1319335	AR	SHIM, 1.1mm	
	1319336	AR	SHIM, 1.15mm	
	1319337	AR	SHIM, 1.2mm	
	1319338	AR	SHIM, 1.25mm	
	1319339	AR	SHIM, 1.3mm	
	1319340	AR	SHIM, 1.35mm	
	1319341	AR	SHIM, 1.4mm	
	1319342	AR	SHIM, 1.45mm	
	1319343	AR	SHIM, 1.5mm	
	1319344	AR	SHIM, 1.55mm	

Figure 5-11 Rear Axle - Input (Continued)

Item	Part Number	Qty.	Description	Rev.
	1319345	AR	SHIM, 1.6mm	
	1319346	AR	SHIM, 0.9mm	
	1319347	AR	SHIM, 0.95mm	
	1319348	AR	SHIM, 0.65mm	
	1319349	AR	SHIM, 0.70mm	
	1319350	AR	SHIM, 0.75mm	
	1319351	AR	SHIM, 0.85mm	
	1319352	AR	SHIM, 0.80mm	
		AR	SHIM OPTIONS, **(644-E S/N 0160036724, 0160036811, 0160036907 & 0160037012), (944-E S/N 0160034634, 0160036710, 0160036722, 0160036735 & 0160036738)**	
	80304160	1	SHIM, S=0.1	
	80304159	1	SHIM, S=0.2	
	80304158	1	SHIM, S=0.3	
	80304157	1	SHIM, S=0.5	
	80304156	1	SHIM, S=0.6	
	80304162	1	SHIM, S=0.65	
	80304155	1	SHIM, S=0.7	
	80304161	1	SHIM, S=0.75	
	80304154	1	SHIM, S=0.8	
	80304153	1	SHIM, S=0.9	
	80304152	1	SHIM, S=1.0	
	80304146	1	SHIM, S=1.2	
	80304163	1	SHIM, S=1.25	
	80304151	1	SHIM, S=1.3	
	80304164	1	SHIM, S=1.35	
	80304150	1	SHIM, S=1.4	
	80304165	1	SHIM, S=1.45	
	80304145	1	SHIM, S=1.5	
	80304166	1	SHIM, S=1.55	
	80304149	1	SHIM, S=1.6	
	80304167	1	SHIM, S=1.65	
	80304148	1	SHIM, S=1.7	
	80304168	1	SHIM, S=1.75	
	80304144	1	SHIM, S=1.8	
	80304169	1	SHIM, S=1.85	
	80304147	1	SHIM, S=1.9	
	80304143	1	SHIM, S=2.0	
8	1319353	1	ROLLER BEARING, **(644-E excluding S/N 0160036724, 0160036811, 0160036907 & 0160037012), (944-E excluding S/N 0160034634, 0160036710, 0160036722, 0160036735 & 0160036738)**	
		1	ROLLER BEARING, **(644-E S/N 0160036724, 0160036811, 0160036907 & 0160037012), (944-E S/N 0160034634, 0160036710, 0160036722, 0160036735 & 0160036738)**	
9	8036751	1	BEVEL GEAR SET, **(644-E excluding S/N 0160036724, 0160036811, 0160036907 & 0160037012), (944-E excluding S/N 0160034634, 0160036710, 0160036722, 0160036735 & 0160036738)**	

Figure 5-11 Rear Axle - Input (Continued)

Item	Part Number	Qty.	Description	Rev.
	70022280	1	BEVEL GEAR SET, **(644-E S/N 0160036724, 0160036811, 0160036907 & 0160037012), (944-E S/N 0160034634, 0160036710, 0160036722, 0160036735 & 0160036738)**	
10	70022244	1	SCREEN SHEET, **(644-E S/N 0160036724, 0160036811, 0160036907 & 0160037012), (944-E S/N 0160034634, 0160036710, 0160036722, 0160036735 & 0160036738)**	

Figure 5-12 Rear Axle - Differential

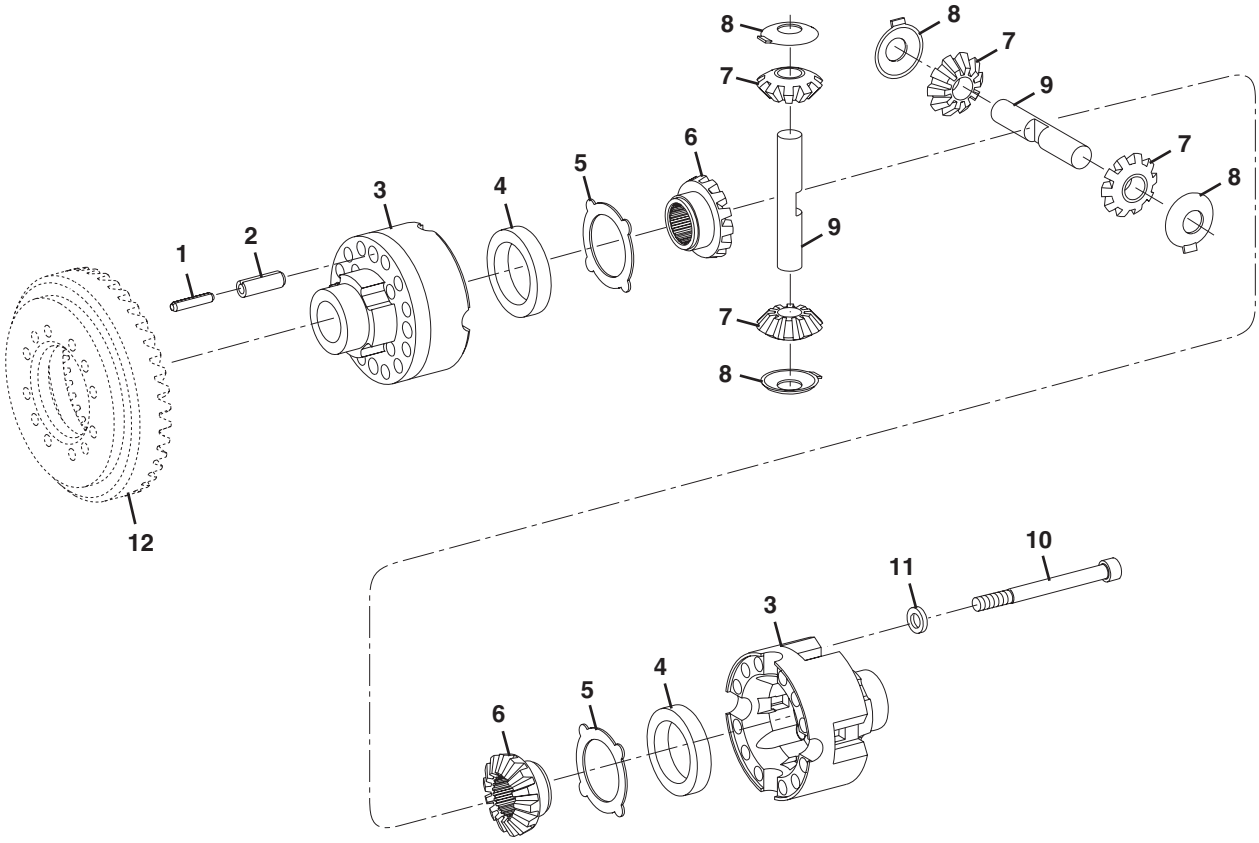

PU2060

Figure 5-12 Rear Axle - Differential

Item	Part Number	Qty.	Description	Rev.
	7028976	1	DIFFERENTIAL ASSY, (includes items 1 thru 11)	
1	1321154	4	SLOT PIN	
2	1321153	4	SLOT PIN	
3	1321215	1	DIFFERENTIAL CASE	
4	1321260	2	DIFFERENTIAL RING, 13.7mm, **(Before Axle S/N 708692)**	
	8035984	2	DIFFERENTIAL RING, 13.6mm, **(Before Axle S/N 708692)**	
	1321259	2	DIFFERENTIAL RING, 13.5mm, **(Before Axle S/N 708692)**	
5	1319412	2	THRUST WASHER	
6	8036752	2	AXLE BEVEL GEAR	
7	8036753	4	DIFFERENTIAL BEVEL GEAR, **(Before Axle S/N 708692)**	
	1319414	4	DIFFERENTIAL BEVEL GEAR, **(Axle S/N 708692 & After)**	
8	1319415	4	THRUST WASHER	
9	1321225	2	DIFFERENTIAL AXLE	
10	8035923	12	CAPSCREW	
11	1321184	12	WASHER	
12		Ref	BEVEL GEAR SET, (see Figure 5-11 for details)	

Figure 5-12 Rear Axle - Differential

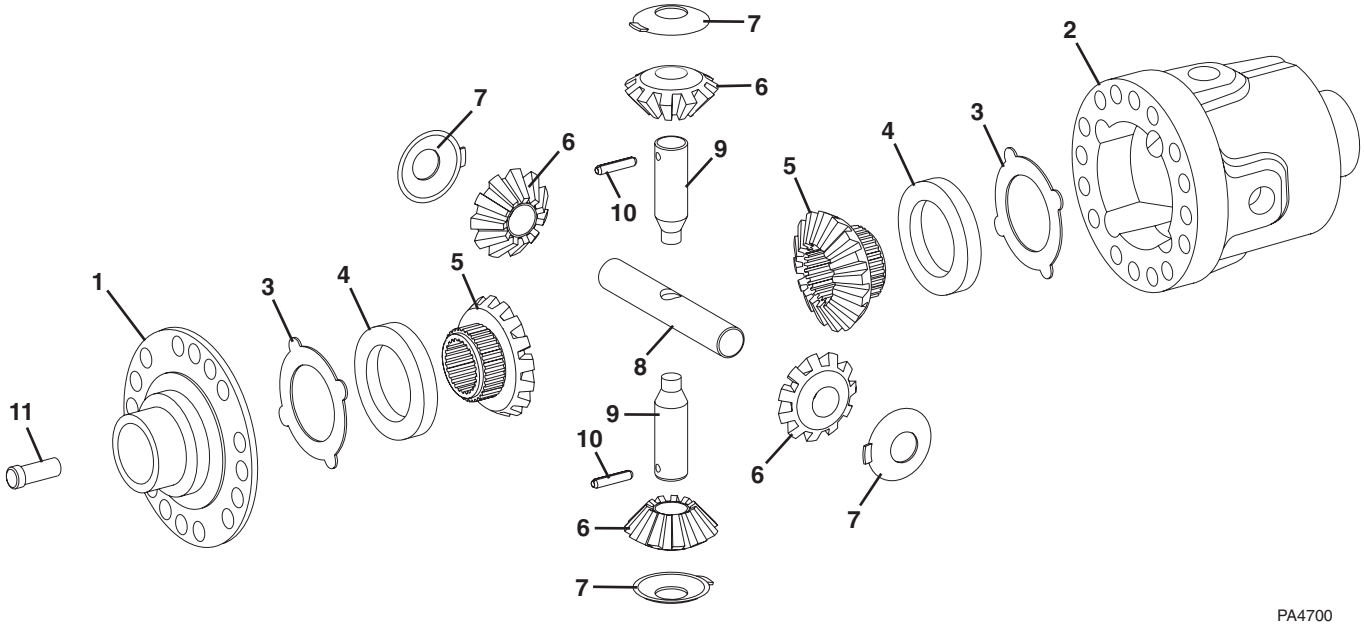

Figure 5-12 Rear Axle - Differential

Item	Part Number	Qty.	Description	Rev.
1	70022229	1	COVER	
2	70022226	1	DIFFERENTIAL CASE	
3	70022284	2	THRUST WASHER	
4	70022285	2	DIFFERENTIAL RING, A=15.0	
5	70022225	2	AXLE BEVEL GEAR	
6	70022185	4	DIFFERENTIAL BEVEL GEAR	
7	70022262	4	THRUST WASHER	
8	70022227	1	DIFFERENTIAL AXLE	
9	70022228	2	DIFFERENTIAL AXLE	
10	70022200	2	SLOT PIN	
11	70022211	16	CAPSCREW	

Figure 5-13 Rear Axle - Axle Casing

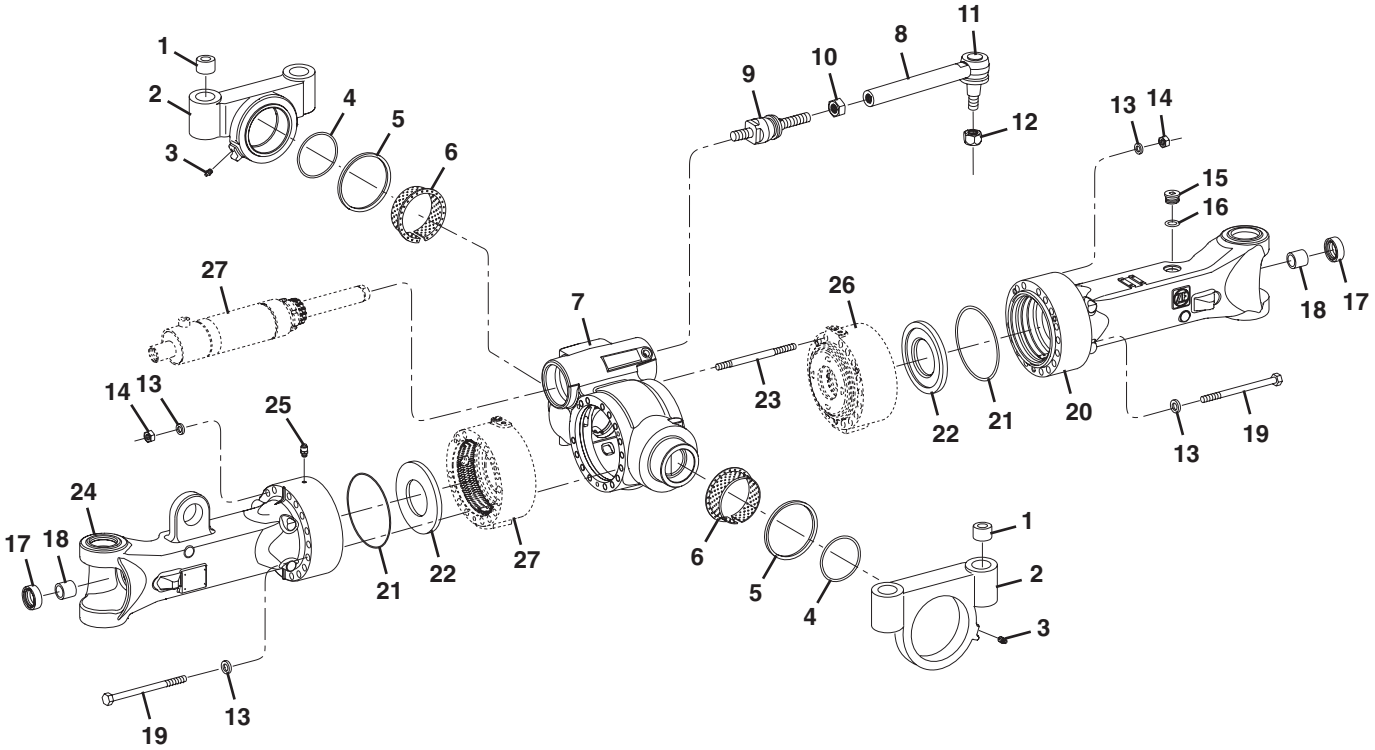

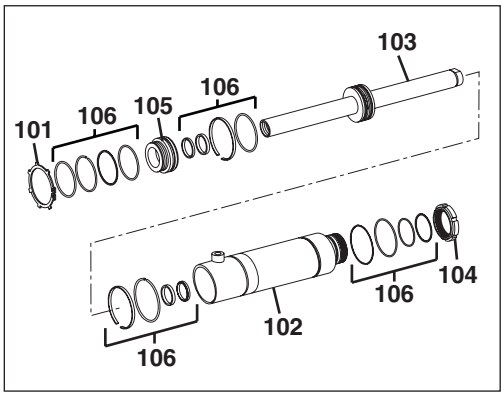

644E Before Axle S/N 949464
944E Before Axle S/N 958546

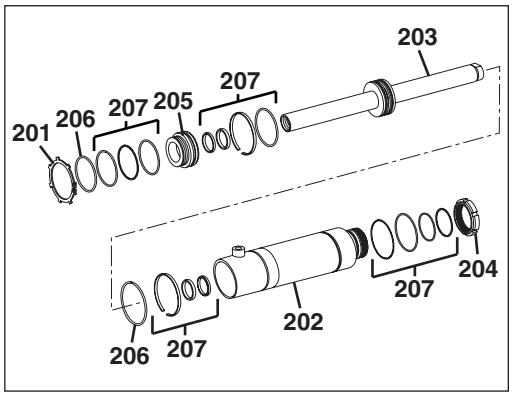

644E Axle S/N 949464 & After
944E Axle S/N 958546 & After

PU2071

Figure 5-13 Rear Axle - Axle Casing

Item	Part Number	Qty.	Description	Rev.
1	1319441	4	CENTERING BUSHING	
2	8035933	2	BRACKET	
3	1319423	2	GREASE FITTING	
4	1319439	2	O-RING	
5	1319440	2	V-RING	
6	8036419	2	FLANGE BUSHING	
7	70021111	1	AXLE DRIVE HOUSING	
8	1321148	2	TRACK ROD, (includes items 9 thru 12)	
9	8036757	2	AXIAL JOINT COUPLING	
10	8036759	2	HEX NUT	
11	8036756	2	BALL JOINT w/PIPE COUPLING	
12	8036758	2	LOCKING NUT	
13	8036312	30	WASHER	
14	1319429	8	HEX NUT	
15	1319506	1	SCREW PLUG	
16	8036331	1	O-RING	
17	7027211	2	SHAFT SEAL	
18	1319433	2	BUSHING	
19	8035927	22	HEX SCREW	
20	8035987	1	AXLE CASING, (right rear)	
21	1319425	2	O-RING	
22	8036606	2	END SHIM, **(Before Axle S/N 679469)**	
	70020413	2	END SHIM, **(Axle S/N 679469 & After)**	
23	8036313	8	STUD	
24	8035986	1	AXLE CASING, (left rear)	
25	1319436	1	BREATHER	
26		Ref	BRAKE HOUSING, (see Figure 5-14 for details)	
27		1	STEERING CYLINDER, (includes items 101 thru 107), **(no longer available; order 70021617 for replacement), (644E Before Axle S/N 1277813), (944E Before Axle S/N 974122)**	
101	8035978	1	L-RING	
102	8036440	1	TUBE WELDMENT	
103	8036439	1	PISTON ROD	
104	8035998	1	SLOTTED NUT	
105	8035980	1	GUIDE PIECE	
106	8035981	1	SEAL KIT	
	70021617	1	STEERING CYLINDER, (includes items 201 thru 207), **(644E Axle S/N 1277813 & After), (944E Axle S/N 974122 & After)**	
201	70021571	1	L-RING	
202		1	CYLINDER TUBE	
203	70021568	1	PISTON ROD	
204	70021570	1	SLOTTED NUT	
205	70021569	1	GUIDE PIECE	
206	70021726	2	RETAINING RING	
207	70021495	1	STEERING CYLINDER SEAL KIT	
			NOTE: ITEM NUMBERS NOT LISTED ARE NOT USED ON THIS FIGURE	

Figure 5-13 Rear Axle - Axle Casing

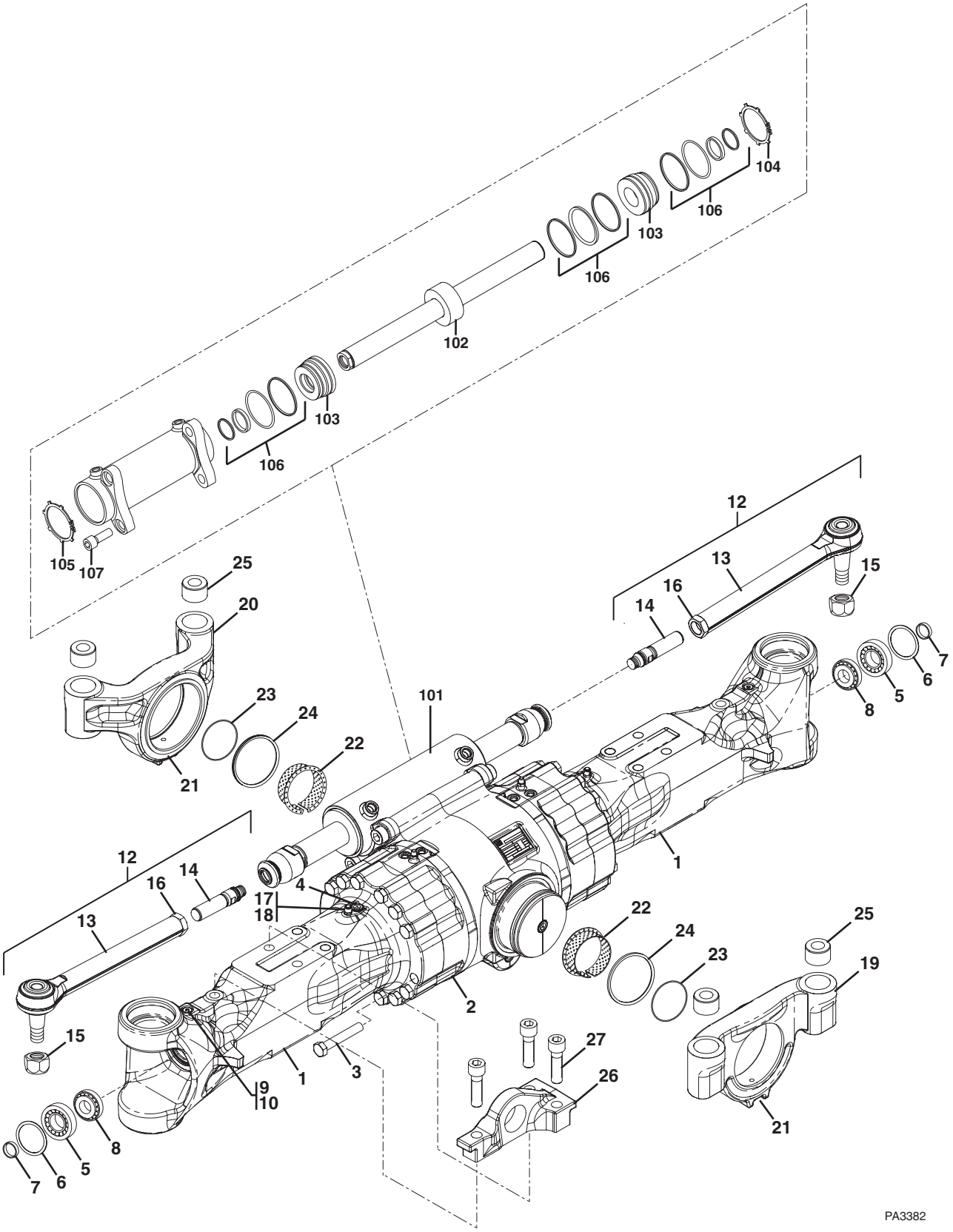

Figure 5-13 Rear Axle - Axle Casing

Item	Part Number	Qty.	Description	Rev.
1	70022255	2	AXLE CASING	
2	70022259	1	AXLE DRIVE HOUSING	
3	70022206	28	HEX HD CAPSCREW, M18X180	
4	1319578	4	SCREW PLUG	
5	70022241	2	BUSHING	
6	70022204	2	O-RING	
7	70022217	2	RING	
8	10731790	2	BEARING	
9	70022201	2	SET SCREW, M10X1X16	
10	1319666	2	SCREW PLUG	
12	70022174	2	TIE ROD, (includes items 13 thru 16)	
13	70022175	1	BALL JOINT	
14	70022172	1	AXIAL JOINT	
15	8036758	1	LOCKNUT	
16	8036759	1	HEX NUT	
17	1319436	1	BREATHER	
18	8036418	1	SCREW PLUG	
19	70022246	1	BRACKET	
20	70022247	1	BRACKET	
21	1319423	2	GREASE FITTING	
22	70022182	2	FLANGE BUSHING	
23	70022205	2	O-RING	
24	70022219	2	V-RING	
25	1319441	4	BUSHING	
26	70022254	1	BRACKET	
27	1001103619	3	HEX HD CAPSCREW, M22X1.5X80	
101	70022173	1	STEERING CYLINDER, (includes items 102 thru 106)	
102	70022177	1	PISTON ROD	
103	70022184	2	BREAK HEAD	
104	70022181	2	RETAINING RING	
105	70022180	2	RETAINING RING	
106	70022178	1	SEAL KIT	
107	70022210	4	CAPSCREW, M22X1.5X55	
			NOTE: ITEM NUMBERS NOT LISTED ARE NOT USED ON THIS FIGURE	

Figure 5-14 Rear Axle - M-Disc Brake

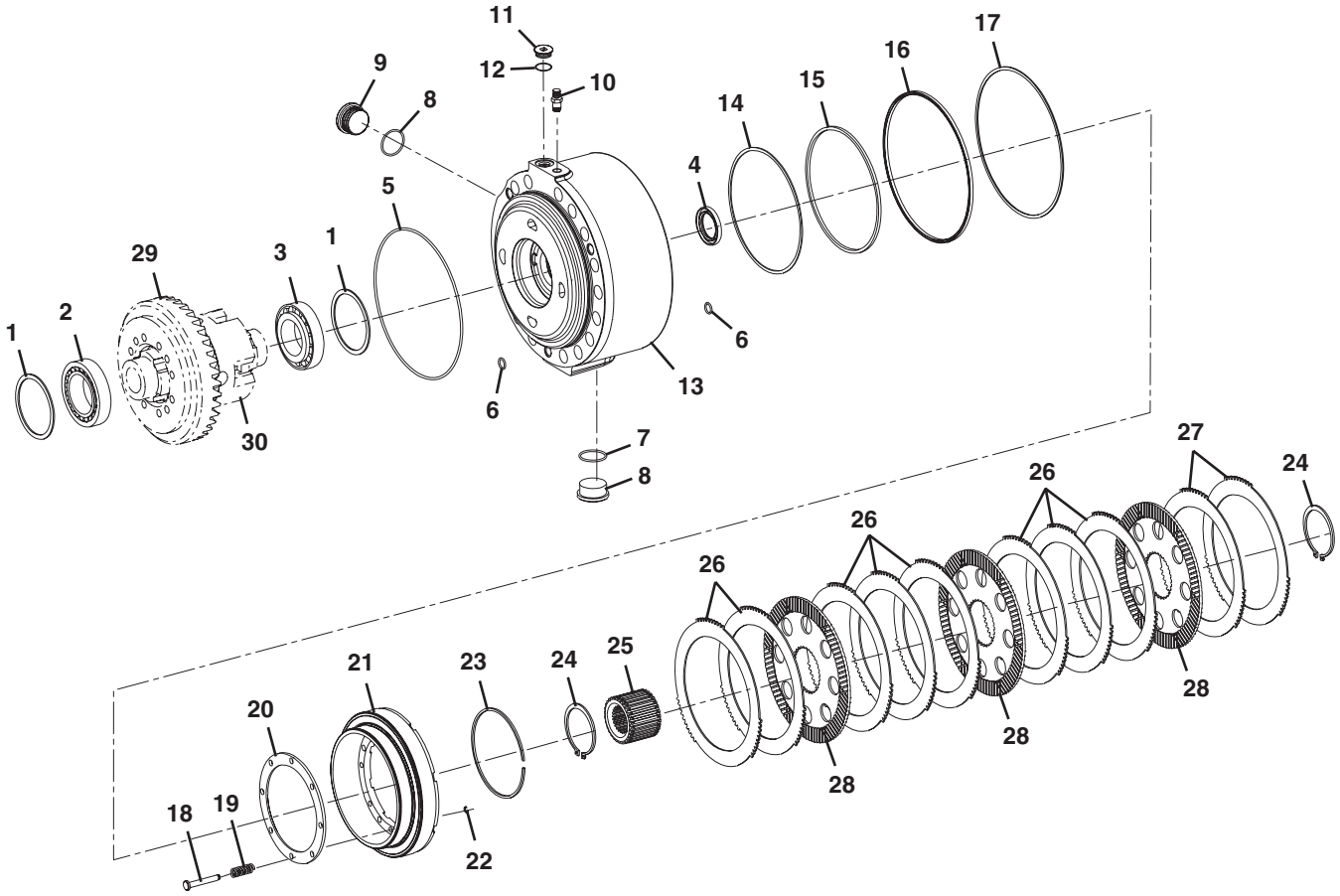

PU2080

Figure 5-14 Rear Axle - M-Disc Brake

Item	Part Number	Qty.	Description	Rev.
1	1319531	AR	SHIM, 0.1mm	
	8035945	AR	SHIM, 0.15mm	
	1319530	AR	SHIM, 0.2mm	
	8035946	AR	SHIM, 0.25	
	1319529	AR	SHIM, 0.3mm	
	8035947	AR	SHIM, 0.35mm	
	8035951	AR	SHIM, 0.4mm	
	1319543	AR	SHIM, 0.45mm	
	1319527	AR	SHIM, 0.5mm	
	1321158	AR	SHIM, 0.55mm	
	1319526	AR	SHIM, 0.6mm	
	1319532	AR	SHIM, 0.65mm	
	1319533	AR	SHIM, 0.7mm	
	1319534	AR	SHIM, 0.75mm	
	1319525	AR	SHIM, 0.8mm	
	1319535	AR	SHIM, 0.85mm	
	1319536	AR	SHIM, 0.9mm	
	1319537	AR	SHIM, 0.95mm	
	1319524	AR	SHIM, 1.0mm	
	1319545	AR	SHIM, 1.05mm	
	1319538	AR	SHIM, 1.10mm	
	1319539	AR	SHIM, 1.15mm	
	1319523	AR	SHIM, 1.20mm	
	1319540	AR	SHIM, 1.25mm	
	1319541	AR	SHIM, 1.30mm	
	1319542	AR	SHIM, 1.35mm	
	1319522	AR	SHIM, 1.40mm	
	1319521	AR	SHIM, 1.45mm	
	1319520	AR	SHIM, 1.50mm	
	1319519	AR	SHIM, 1.55mm	
	1319518	AR	SHIM, 1.60mm	
	8035948	AR	SHIM, 1.63mm	
	1319517	AR	SHIM, 1.65mm	
	1319510	AR	SHIM, 2.0mm	
	1321159	AR	SHIM, 1.47mm	
	1319516	AR	SHIM, 1.70mm	
	1319515	AR	SHIM, 1.75mm	
	1319514	AR	SHIM, 1.80mm	
	1319513	AR	SHIM, 1.85mm	
	1319512	AR	SHIM, 1.90mm	
	1319511	AR	SHIM, 1.95mm	
2	8036447	2	ROLLER BEARING	
3	8036445	2	ROLLER BEARING	
4	8036444	2	SHAFT SEAL	
5	1319425	2	O-RING	
6	1319491	12	O-RING	
7	8036331	4	O-RING	
8	8036846	2	SCREW PLUG	
9	1319506	2	SCREW PLUG	

Figure 5-14 Rear Axle - M-Disc Brake (Continued)

Item	Part Number	Qty.	Description	Rev.
10	1319505	2	BREATHER	
11	1319666	2	SCREW PLUG	
12	7027217	2	O-RING	
13	8035936	1	BRAKE HOUSING, (left side), **(Before Axle S/N 679469)**	
	70020483	1	BRAKE HOUSING, (left side), **(Axle S/N 679469 & After)**	
	8035939	1	BRAKE HOUSING, (right side), **(Before Axle S/N 679469)**	
	70020484	1	BRAKE HOUSING, (right side), **(Axle S/N 679469 & After)**	
14	1321151	2	SUPPORT RING	
15	1321162	2	U-RING	
16	1321163	2	U-RING	
17	1321152	2	SUPPORT RING	
18	1319496	16	PIN	
19	1319497	16	SPRING, COMPRESSION	
20	8036305	2	WASHER	
21	8036304	2	PISTON	
22	1319499	16	CRESCENT RING	
23	1319504	4	SNAP RING	
24	10731949	2	RETAINING RING	
25	1321174	2	DISC CARRIER, **(Before Axle S/N 824742)**	
	70020409	1	DISC CARRIER, **(Axle S/N 824742 & After)**	
26	1319502	16	O. CLUTCH DISC, 3.0mm, **(Before Axle S/N 679469)**	
	70020486	8	O. CLUTCH DISC, 2.5mm, **(Axle S/N 679469 & After)**	
	70020487	8	O. CLUTCH DISC, 3.0mm, **(Axle S/N 679469 & After)**	
27	1319500	4	O. CLUTCH DISC, 2.0mm, **(Before Axle S/N 679469)**	
	70020485	4	O. CLUTCH DISC, 2.0mm, **(Axle S/N 679469 & After)**	
	1319501	4	O. CLUTCH DISC, 2.5mm, **(Before Axle S/N 679469)**	
	70020486	4	O. CLUTCH DISC, 2.5mm, **(Axle S/N 679469 & After)**	
	1319502	4	O. CLUTCH DISC, 3.0mm, **(Before Axle S/N 679469)**	
	70020487	4	O. CLUTCH DISC, 3.0mm, **(Axle S/N 679469 & After)**	
28	1321150	6	I. CLUTCH DISC, **(Before Axle S/N 824742)**	
	70020408	3	I. CLUTCH DISC, **(Axle S/N 824742 & After)**	
29		Ref	BEVEL GEAR SET, (see Figure 5-11 for details)	
30		Ref	DIFFERENTIAL ASSY, (see Figure 5-12 for details)	

Figure 5-14 Rear Axle - M-Disc Brake (Continued)

Item	Part Number	Qty.	Description	Rev.

Figure 5-14 Rear Axle - M-Disc Brake

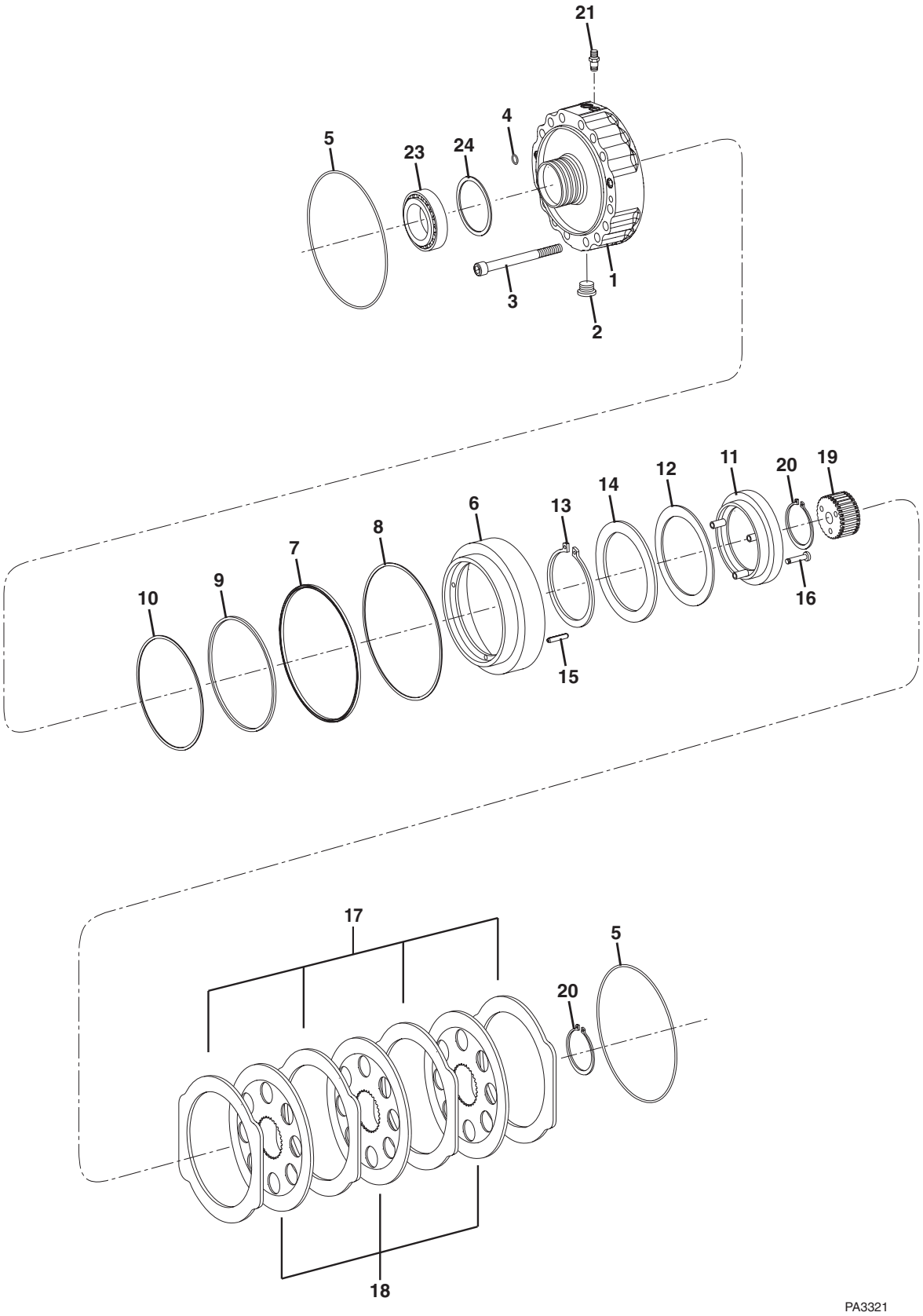

Figure 5-14 Rear Axle - M-Disc Brake

Item	Part Number	Qty.	Description	Rev.
1	70022282	2	BRAKE HOUSING	
2	1319578	2	SCREW PLUG	
3	70022209	6	CAP SCREW, M12X105	
4	8036847	10	O-RING	
5	80304462	4	O-RING	
6	70022250	2	PISTON	
7	70022190	2	PISTON PACKING	
8	70022193	2	BACKUP RING	
9	70022189	2	PISTON PACKING	
10	70022194	2	BACKUP RING	
11	70022236	2	RING	
12	70022183	2	CUP SPRING	
13	70022198	2	RETAINING RING	
14	70022235	2	WASHER	
15	70022186	8	SLOT PIN	
16	1319214	6	CAP SCREW, M8X40	
17	70022196	8	O.CLUTCH DISC	
18	70022176	6	I.CLUTCH DISC	
19	70022253	2	DISC CARRIER	
20	10731949	4	RETAINING RING	
21	70022171	2	BREATHER	
22	70022215	2	SCREW PLUG, (not shown)	
23	70022222	2	BEARING	
24	1319537	A/R	SHIM, A=0.95	
	1319545	A/R	SHIM, A=1.05	
	1319539	A/R	SHIM, A=1.15	
	1319540	A/R	SHIM, A=1.25	
	1319542	A/R	SHIM, A=1.35	

Figure 5-15 Rear Axle - Brake

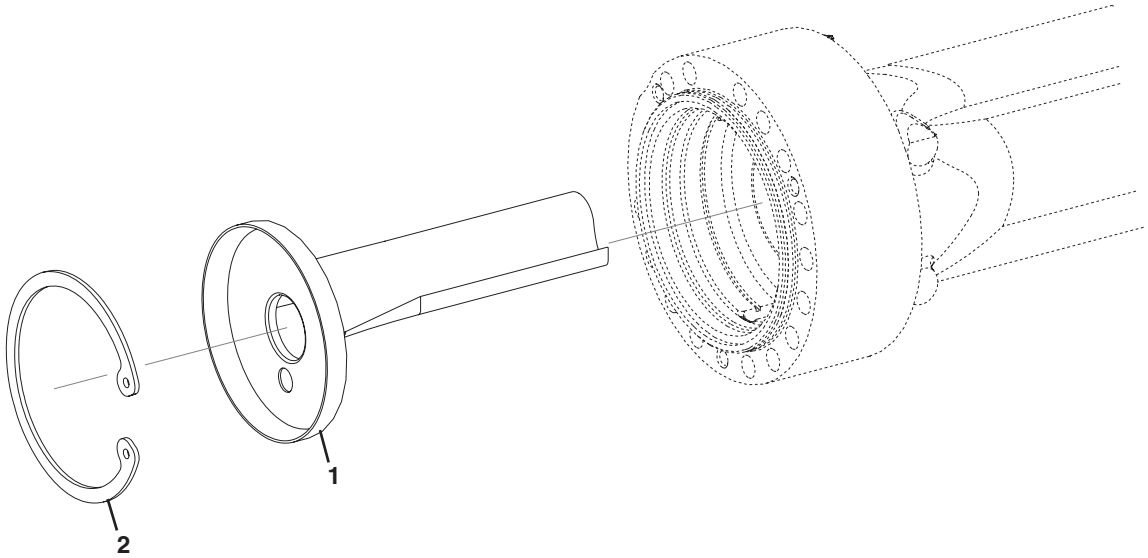

PU2090

Figure 5-15 Rear Axle - Brake

Item	Part Number	Qty.	Description	Rev.
1	1321172	2	OIL DAM	
2	1321178	2	RETAINING RING	

Figure 5-16 Rear Axle - Joint Housing

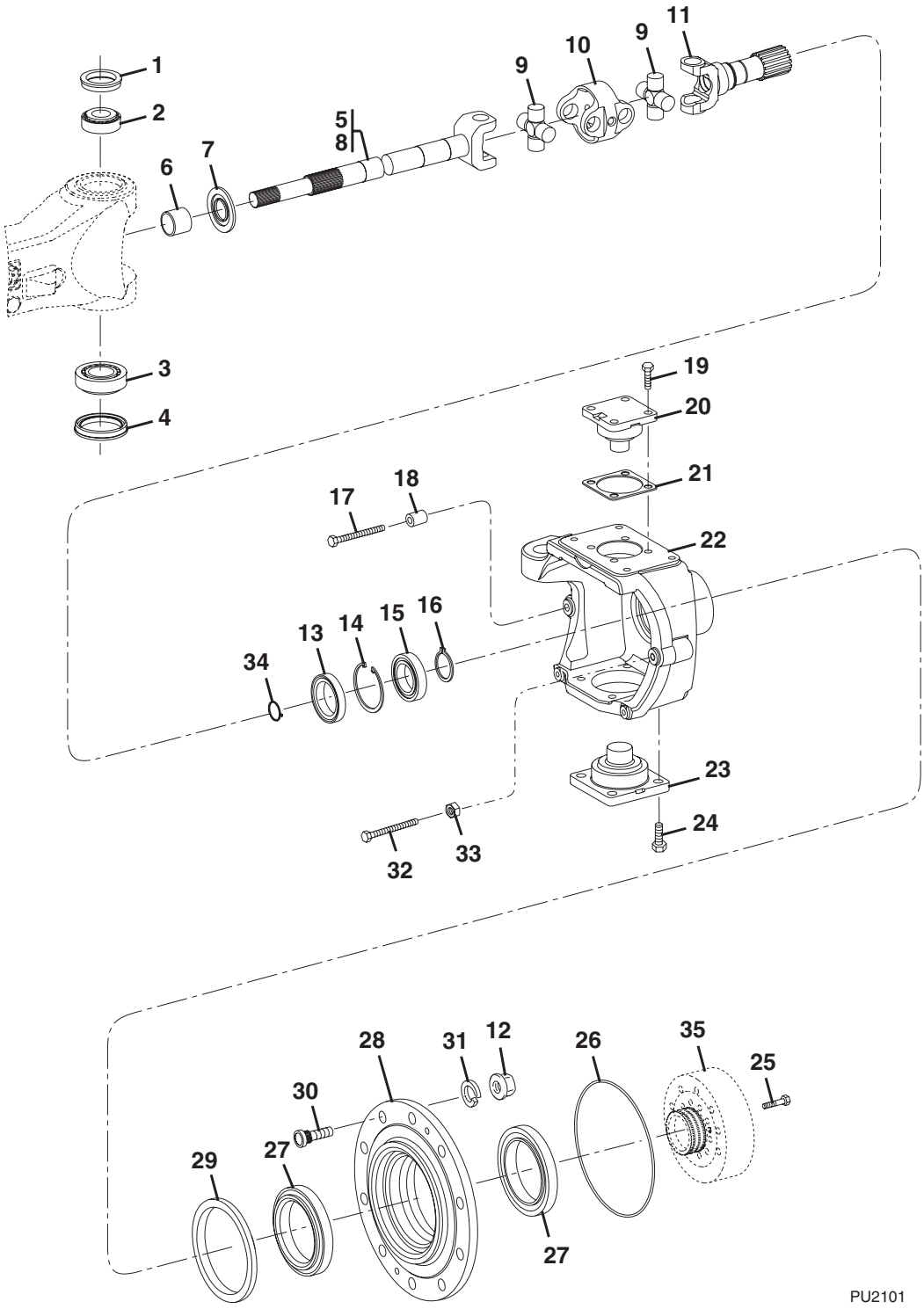

Figure 5-16 Rear Axle - Joint Housing

Item	Part Number	Qty.	Description	Rev.
1	8036338	2	SHAFT SEAL	
2	1319444	2	ROLLER BEARING	
3	1319445	2	ROLLER BEARING	
4	1319447	2	SHAFT SEAL	
5	7027218	2	DRIVE SHAFT UNIVERSAL COUPLING, (includes items 6 thru 11), **(Before Axle S/N 720124)**	
	7028979	2	DRIVE SHAFT UNIVERSAL COUPLING, (includes items 6 thru 11), **(Axle S/N 720125 & After)**	
6	8035973	2	BUSHING	
7	8035996	2	SCREEN SHEET	
8	7027221	2	JOINT COUPLING FORK, **(Before Axle S/N 720124)**	
	8035995	2	JOINT COUPLING FORK, **(Axle S/N 720125 & After)**	
9	7027222	2	JOINT CROSS, **(Before Axle S/N 720124)**	
	70021554	2	JOINT CROSS, **(Axle S/N 720125 & After)**	
10	7027219	2	CENTRAL PIECE, **(Before Axle S/N 720124)**	
	70021553	2	CENTRAL PIECE, **(Axle S/N 720125 & After)**	
11	7027220	2	JOINT FORK, **(Before Axle S/N 720124)**	
	8035994	2	JOINT FORK, **(Axle S/N 720125 & After)**	
12		Ref	WHEEL NUT, (see Figure 5-1 for details)	
13	7028977	2	SHAFT SEAL	
14	1319210	2	RETAINING RING	
15	1321157	2	BALL BEARING	
16	80304405	2	RETAINING RING	
17	8036330	2	STOP SCREW	
18	8036413	2	SPACER TUBE	
19	1319463	8	HEX SCREW	
20	1319461	2	BEARING PIN	
21	1319448	AR	SHIM, 0.2mm	
	1319449	AR	SHIM, 0.3mm	
	1319450	AR	SHIM, 0.4mm	
	1319451	AR	SHIM, 0.6mm	
	1319452	AR	SHIM, 0.8mm	
	1319453	AR	SHIM, 1.0mm	
	1319454	AR	SHIM, 1.2mm	
	1319455	AR	SHIM, 1.4mm	
	1319456	AR	SHIM, 1.6mm	
	1319457	AR	SHIM, 1.8mm	
	1319458	AR	SHIM, 2.0mm	
	1319459	AR	SHIM, 0.7mm	
	1319460	AR	SHIM, 0.5mm	
22	1321245	1	JOINT HOUSING, (left side)	
	1321246	1	JOINT HOUSING, (right side)	
23	1319462	2	BEARING PIN	
24	1319464	8	HEX SCREW	
25	8035997	20	HEX SCREW	
26	1319470	2	O-RING, (644E)	
	1321155	2	O-RING, (944E)	
27	1319472	4	ROLLER BEARING	
28	8036435	2	HUB, (644E)	

Figure 5-16 Rear Axle - Joint Housing

Item	Part Number	Qty.	Description	Rev.
	1321239	2	HUB, (944E)	
29	80304173	2	CASSETTE RING	
30	8036434	20	WHEEL BOLT	
31		Ref	SPRING WASHER, (see Figure 5-1 for details)	
32	8036610	2	STOP SCREW	
33	1319477	2	HEX NUT	
34	1321226	2	RETAINING RING	
35		Ref	RING GEAR, (see Figure 5-17 for details)	

Figure 5-16 Rear Axle - Joint Housing

Item	Part Number	Qty.	Description	Rev.

Figure 5-16 Rear Axle - Joint Housing

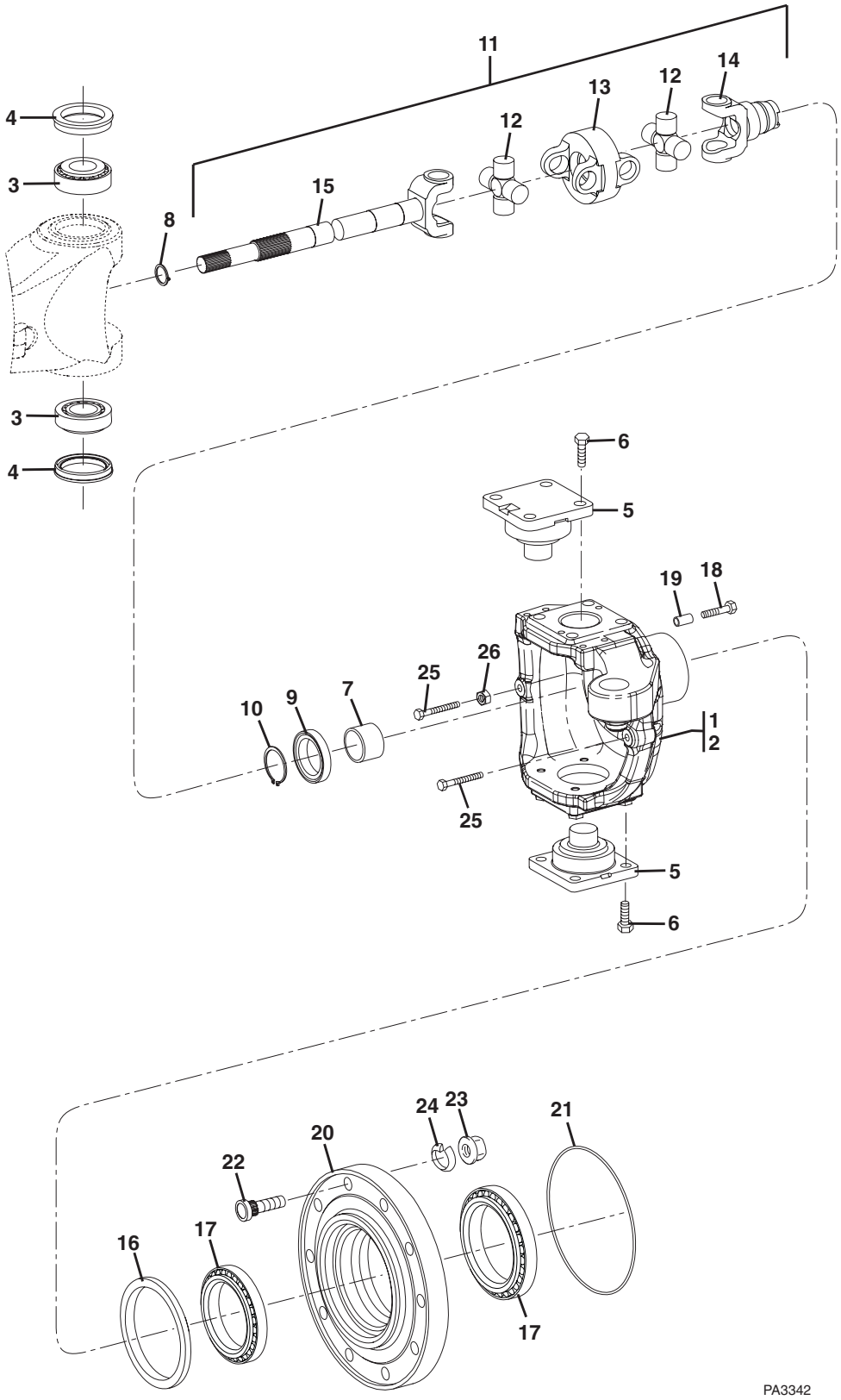

Figure 5-16 Rear Axle - Joint Housing

Item	Part Number	Qty.	Description	Rev.
1	70022237	1	JOINT HOUSING, (right side)	
2	70022238	1	JOINT HOUSING, (left side)	
3	70022223	4	ROLLER BEARING	
4	1319447	4	SHAFT SEAL	
5	70022240	4	BEARING PIN	
6	1319464	16	HEX SCREW, M16X40	
7	70022179	2	BUSHING	
8	10731789	2	RETAINING RING	
9	70022218	2	SHAFT SEAL	
10	1321226	2	RETAINING RING	
11	70022170	2	UNIVERSAL COUPLING DRIVE SHAFT ASSY, (includes items 12 thru 15)	
12	70021554	2	JOINT CROSS	
13	70021553	1	CENTRAL PIECE	
14	70022187	1	FORK SHAFT	
15	70022188	1	FORK SHAFT	
16	80304173	2	SHAFT SEAL	
17	1319472	4	ROLLER BEARING	
18	70022208	16	HEX SCREW, M14X70	
19	70022234	16	CENTERING BUSHING	
20	70022249	2	HUB	
21	70022203	2	O-RING	
22	70022230	20	WHEEL BOLT	
23		Ref	WHEEL NUT, (see Figure 5-1 for details)	
24		Ref	SPRING WASHER, (see Figure 5-1 for details)	
25	8036330	4	STOP SCREW, M14X1.5	
26	1319477	2	HEX NUT, M14X1.5	

Figure 5-17 Rear Axle - Planetary Drive

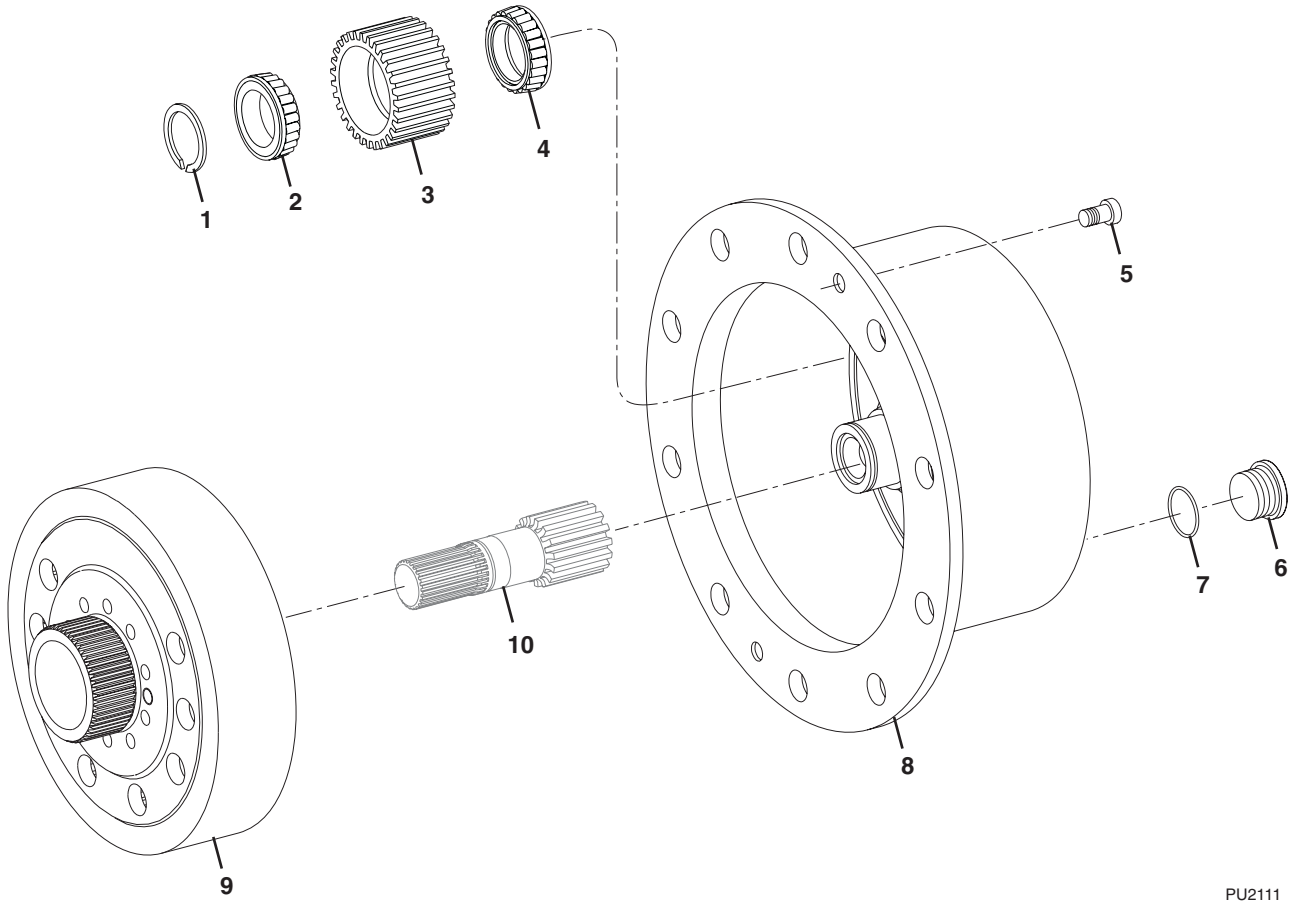

Figure 5-17 Rear Axle - Planetary Drive

Item	Part Number	Qty.	Description	Rev.
1	1319485	6	SNAP RING	
2	1319484	6	INNER RING BEARING	
3	1321231	6	PLANET GEAR	
4	1319483	6	INNER RING BEARING	
5	1319488	4	CAPSCREW, (644E)	
	8035977	4	CAPSCREW, (944E)	
6	1319506	2	SCREW PLUG	
7	8036331	2	O-RING	
8	8036436	2	PLANET CARRIER, (644E)	
	1321238	2	PLANET CARRIER, (944E)	
9	1321247	2	RING GEAR	
10	1321242	1	SUN GEAR SHAFT	

Figure 5-17 Rear Axle - Planetary Drive

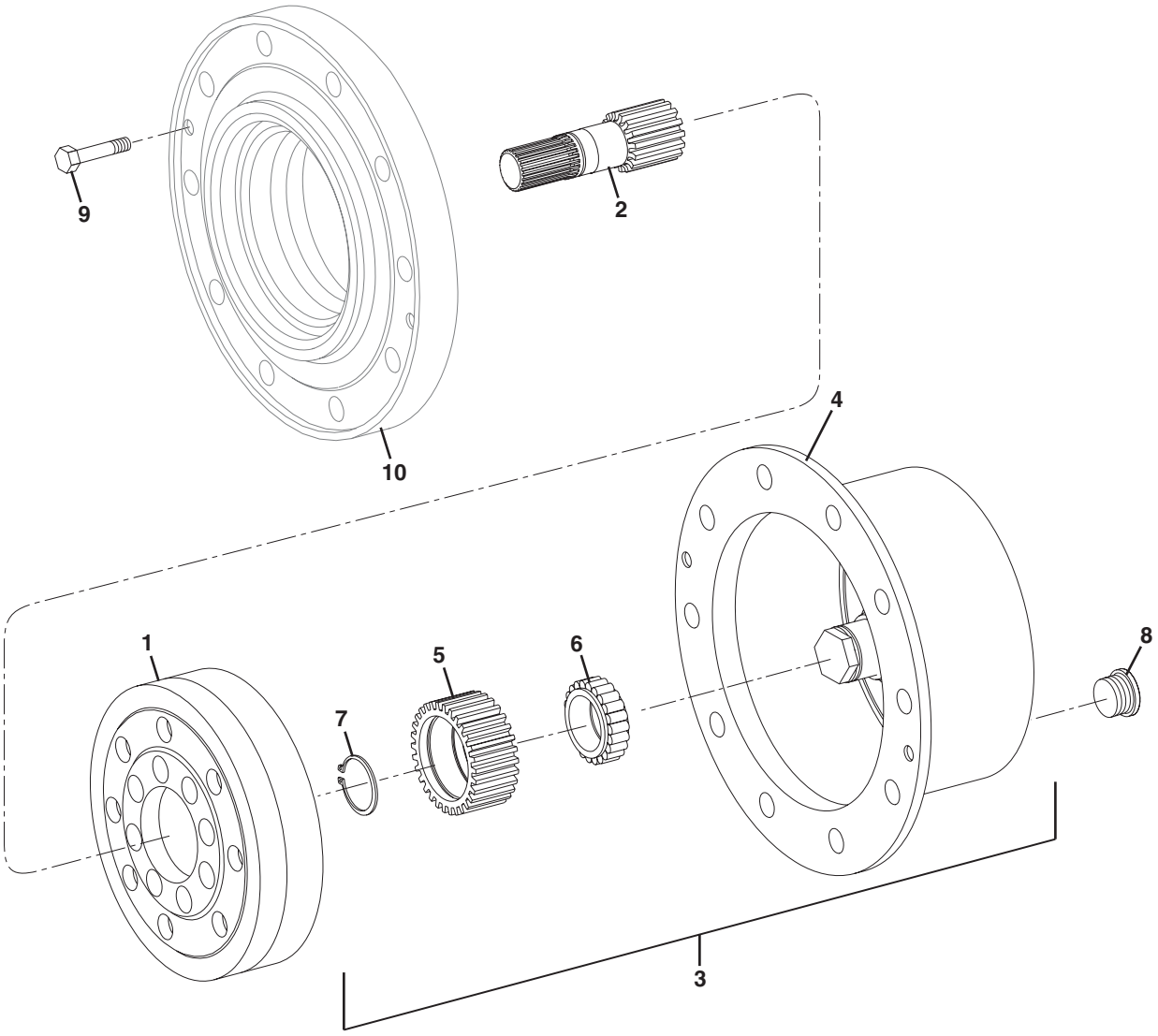

Figure 5-17 Rear Axle - Planetary Drive

Item	Part Number	Qty.	Description	Rev.
1	70022242	1	RING GEAR	
2	70022239	2	SUN GEAR SHAFT	
3	70022233	2	PLANETARY CARRIER ASSY, (includes items 4 thru 7)	
4	70022256	1	PLANETARY CARRIER	
5	70022243	3	PLANETARY GEAR	
6	70022221	3	CYL. ROLLER BEARING	
7	70022197	3	RETAINING RING	
8	1319578	2	SCREW PLUG	
9	70022207	4	HEX SCREW, M12X30	
10		Ref	HUB, (see Figure 5-16 for details)	

Figure 5-18 ZF Transmission

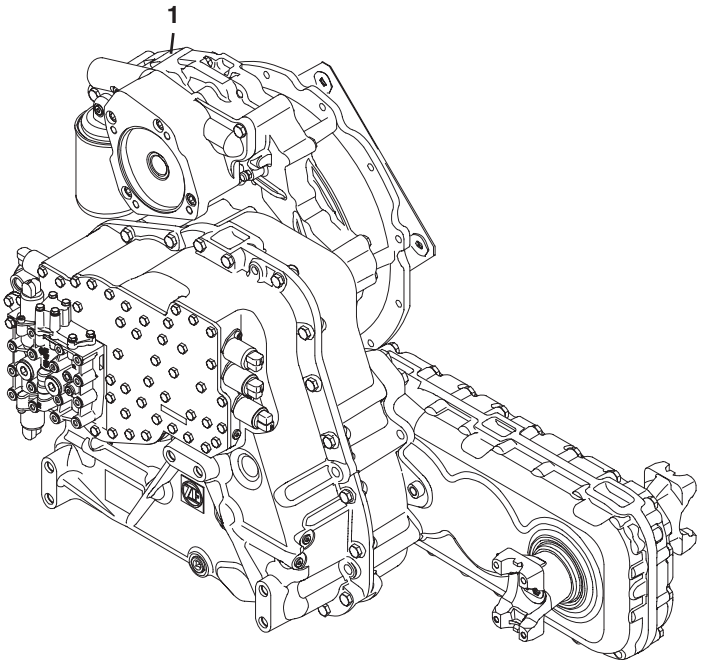

PU3360

Figure 5-18 ZF Transmission

Item	Part Number	Qty.	Description	Rev.
	1001095739	1	TRANSMISSION KIT, (644E - p/n 8841046 & 944E - p/n 8441047 no longer available, order 1001095739 for replacement), (includes item 1 and items 17 & 22 on Figure 5-1)	
1	1001095741	1	TRANSMISSION ASSY - 4 SPEED, (includes the following items)	
			ENGINE CONNECTION & INPUT SHAFTS, (see Figure 5-19 for details)	
			GEARBOX HOUSING & COUPLING LOCATION, (see Figure 5-20 for details)	
			COUPLING GROUP 1, (see Figure 5-21 for details)	
			COUPLING GROUP 2, (see Figure 5-22 for details)	
			COUPLING GROUP 3, (see Figure 5-23 for details)	
			COUPLING GROUP 4, (see Figure 5-24 for details)	
			REVERSING GEAR GROUP CV, (see Figure 5-25 for details)	
			REVERSING GEAR GROUP CR, (see Figure 5-26 for details)	
			OIL PUMP, (see Figure 5-27 for details)	
			CONTROL UNIT, (see Figure 5-28 for details)	
			GEARSHIFT SYSTEM, (see Figure 5-29 for details)	
			TRANSFER BOX, (see Figure 5-30 for details)	

Figure 5-19 ZF Transmission - Engine Connection & Input Shafts

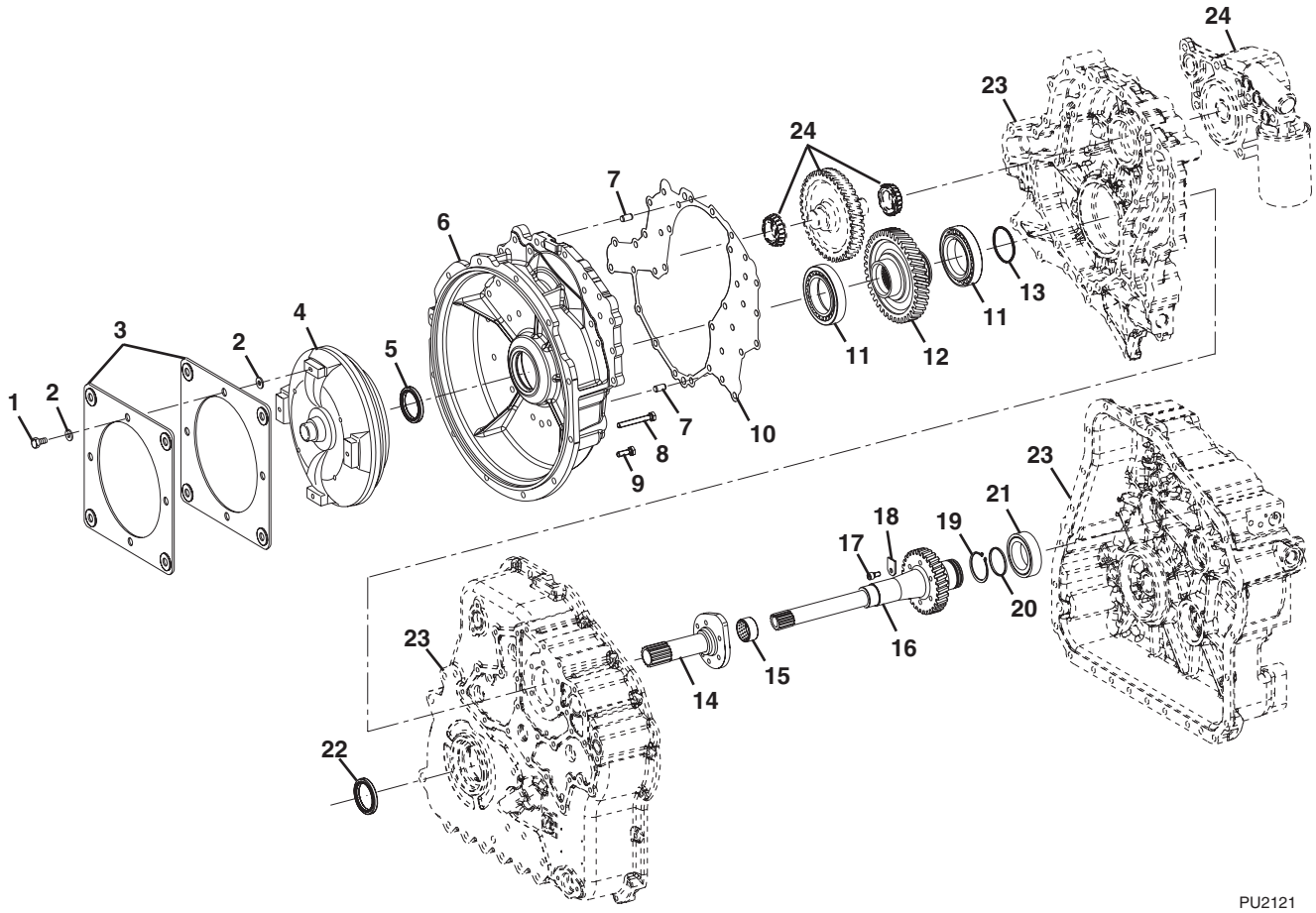

Figure 5-19 ZF Transmission - Engine Connection & Input Shafts

Item	Part Number	Qty.	Description	Rev.
1	7026744	4	HEX HD CAPSCREW, M10X16mm	
2	7026745	8	THRUST WASHER, 1	
3	1319229	2	DIAPHRAGM	
4	7027256	1	CONVERTER	
5	1319576	1	SHAFT SEAL	
6	70021526	1	CONVERTER BELL	
7	1319571	2	CYLINDRICAL PIN	
8	7026775	15	HEX HD CAPSCREW, M10X80mm	
9	80304394	21	HEX HD CAPSCREW, M10X30mm	
10	7026774	1	GASKET	
11	7026769	2	ROLLER BEARING	
12	7026771	1	SHAFT	
13	7026772	1	PISTON RING, 67X3.00mm	
14	7026748	1	STATOR SHAFT	
15	1319558	1	BEARING BUSHING	
16	7026747	1	TURBINE SHAFT	
17	1319585	2	CAPSCREW, M8X16	
18		2	SHACKLE	
19	80304405	1	RETAINING RING, 55X2.00mm	
20	7026749	1	PISTON RING	
21	1319563	1	BEARING BUSHING	
22	1319641	1	SHAFT SEAL	
23		Ref	GEARBOX HOUSING, (see Figure 5-20 for details)	
24		Ref	OIL PUMP, (see Figure 5-27 for details)	

Figure 5-20 ZF Transmission - Gearbox Housing & Coupling Location

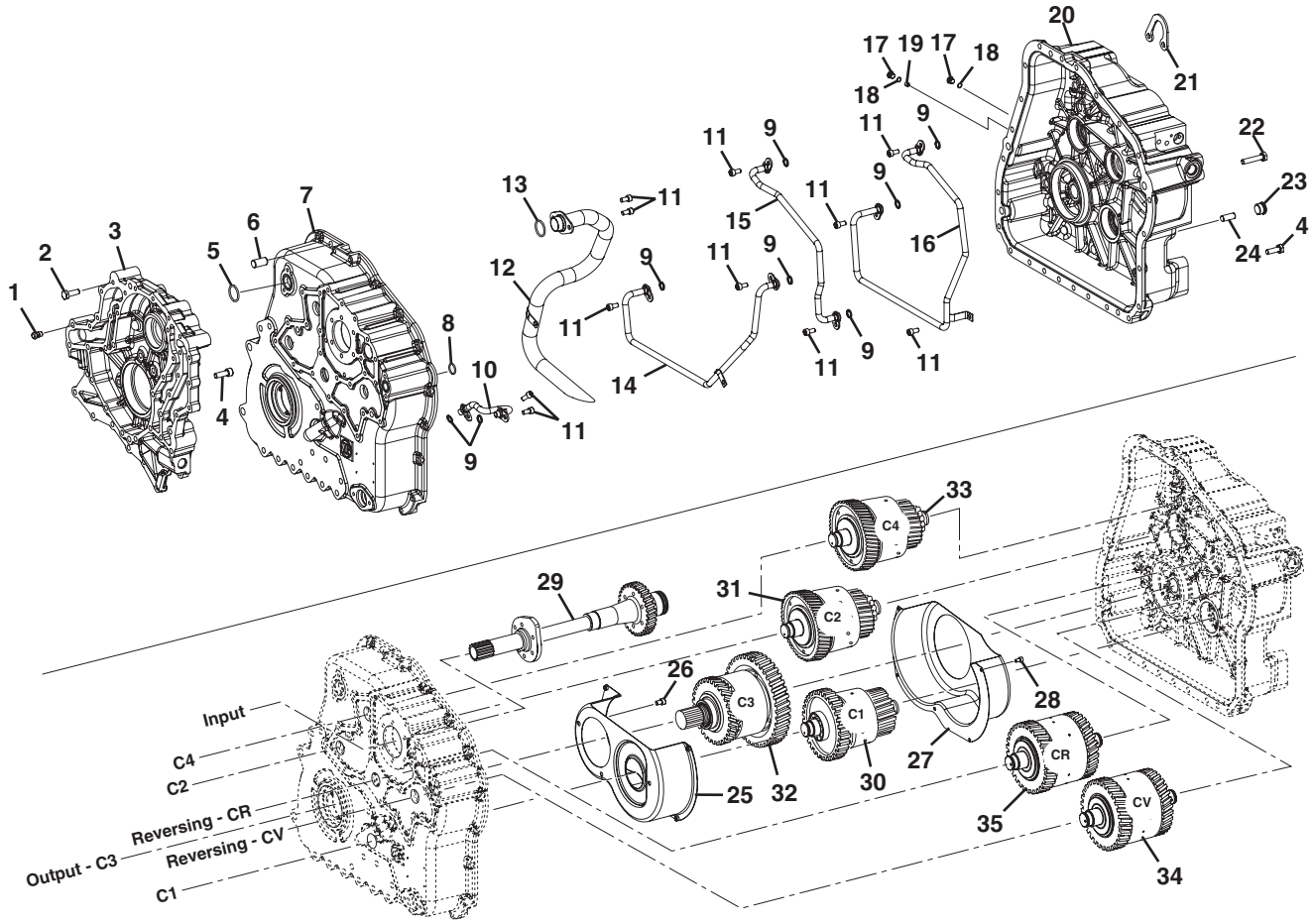

Figure 5-20 ZF Transmission - Gearbox Housing & Coupling Location

Item	Part Number	Qty.	Description	Rev.
1	10731744	1	BREATHER	
2		6	HEX HD CAPSCREW, M10X30mm	
3	70021920	1	HOUSING	
4	80304394	31	HEX HD CAPSCREW, M10X30mm	
5	7026792	2	O-RING	
6	1319571	2	CYLINDRICAL PIN	
7	7029972	1	HOUSING I	
8	1319581	1	O-RING	
9	8036847	8	O-RING	
10	7026754	1	PIPE	
11	1319585	11	HEX HD CAPSCREW, M8X16mm	
12	7026753	1	SUCTION TUBE	
13	1319581	1	O-RING	
14	7026751	1	PIPE	
15	7026750	1	PIPE	
16	7026752	1	PIPE	
17	1319670	7	SCREW PLUG	
18	10731709	7	O-RING	
19		1	ORIFICE	
20	7029973	1	HOUSING II	
21	1319590	1	BRACKET	
22	7026794	6	HEX HD CAPSCREW, M10X50mm	
23	1319578	1	SCREW PLUG	
24	1319571	2	CYLINDRICAL PIN	
25	7026755	1	SCREEN SHEET	
26		5	SOCKET HD CAPSCREW, M8X12mm	
27	7026756	1	SCREEN SHEET	
28	1319646	5	CAPSCREW	
29		Ref	TURBINE SHAFT, (see Figure 5-19 for details)	
30		Ref	COUPLING GROUP 1, (see Figure 5-21 for details)	
31		Ref	COUPLING GROUP 2, (see Figure 5-22 for details)	
32		Ref	COUPLING GROUP 3, (see Figure 5-23 for details)	
33		Ref	COUPLING GROUP 4, (see Figure 5-24 for details)	
34		Ref	REVERSING GEAR GROUP CV, (see Figure 5-25 for details)	
35		Ref	REVERSING GEAR GROUP CR, (see Figure 5-26 for details)	

Figure 5-21 ZF Transmission - Coupling Group 1

644E

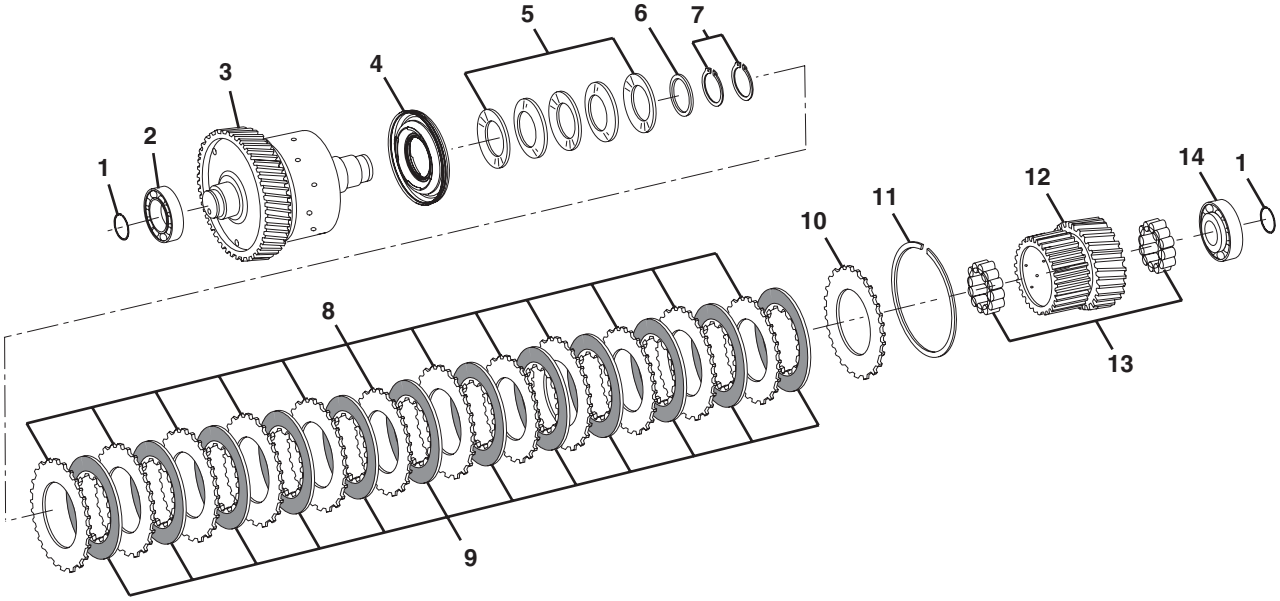

PU2140

Figure 5-21 ZF Transmission - Coupling Group 1

Item	Part Number	Qty.	Description	Rev.
1	7026761	2	PISTON RING	
2	1319608	1	ROLLER BEARING	
3	7027261	1	COUPLING, (used with transmission - 4WG92 TSC)	
	1319591	1	COUPLING, (used with transmission - 4WG98 TSC)	
4	8036575	1	PISTON	
5	1319595	5	CUP SPRING	
6	1319596	1	SHIM	
7	10731845	2	RETAINING RING	
8	7026759	A/R	O. CLUTCH DISC, (transmission - 4WG92 TSC qty. 10, 4WG98 TSC qty. 12)	
9	7026758	A/R	LIN. CLUTCH DISC, (transmission - 4WG92 TSC qty. 10, 4WG98 TSC qty. 12)	
10	7026760	1	END SHIM	
11	1319600	1	SNAP RING, 3.5mm	
	1319601	1	SNAP RING, 3.5mm	
	1319602	1	SNAP RING, 3.0mm	
	1319603	1	SNAP RING, 2.5mm	
	1319604	1	SNAP RING, 2.0mm	
	7029849	1	SNAP RING, 3.25mm	
	7029850	1	SNAP RING, 3.75mm	
	7029851	1	SNAP RING, 2.25mm	
	7029852	1	SNAP RING, 2.75mm	
12	1319607	1	DISC CARRIER	
13	1319606	2	ROLLER CAGE	
14	7029532	1	OUTER RING	
	7029533	1	INNER RING	

Figure 5-21 ZF Transmission - Coupling Group 1

944E

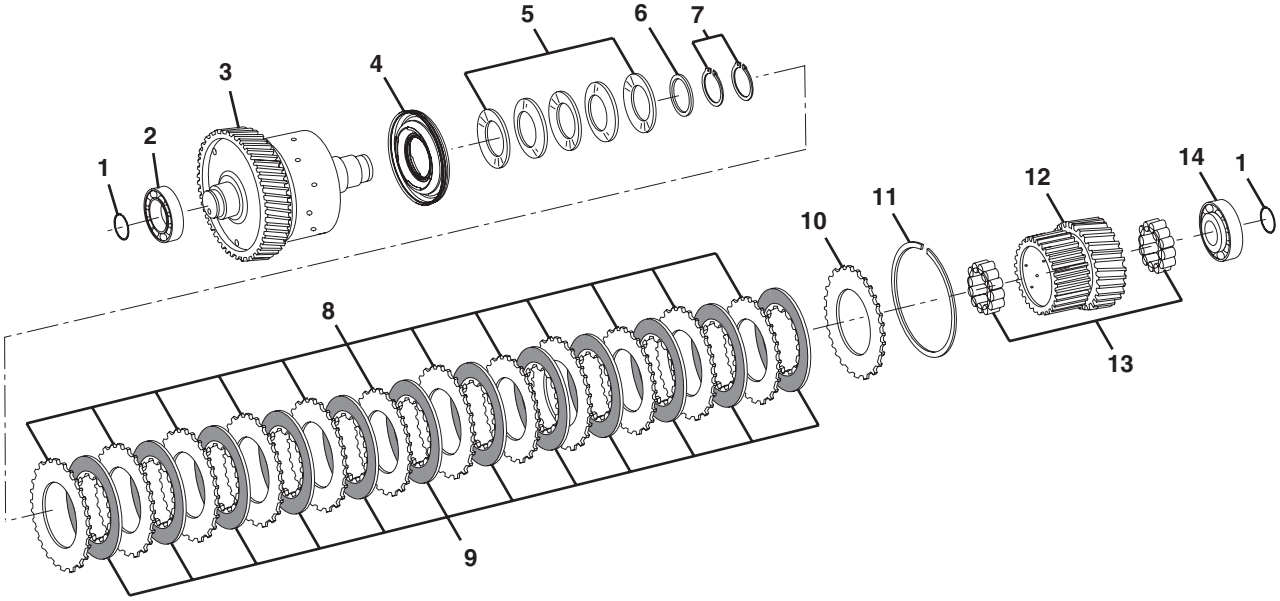

PU2150

Figure 5-21 ZF Transmission - Coupling Group 1

Item	Part Number	Qty.	Description	Rev.
1	7026761	2	PISTON RING	
2	1319608	1	ROLLER BEARING	
3	1319591	1	COUPLING	
4	8036575	1	PISTON	
5	1319595	5	CUP SPRING	
6	1319596	1	SHIM	
7	10731845	2	RETAINING RING	
8	7026759	12	O. CLUTCH DISC	
9	7026758	12	LIN. CLUTCH DISC	
10	7026760	1	END SHIM	
11	1319600	1	SNAP RING, 3.5mm	
	1319601	1	SNAP RING, 3.5mm	
	1319602	1	SNAP RING, 3.0mm	
	1319603	1	SNAP RING, 2.5mm	
	1319604	1	SNAP RING, 2.0mm	
	7029849	1	SNAP RING, 3.25mm	
	7029850	1	SNAP RING, 3.75mm	
	7029851	1	SNAP RING, 2.25mm	
	7029852	1	SNAP RING, 2.75mm	
12	1319607	1	DISC CARRIER	
13	1319606	2	ROLLER CAGE	
14	7029532	1	OUTER RING	
	7029533	1	INNER RING	

Figure 5-22 ZF Transmission - Coupling Group 2

644E

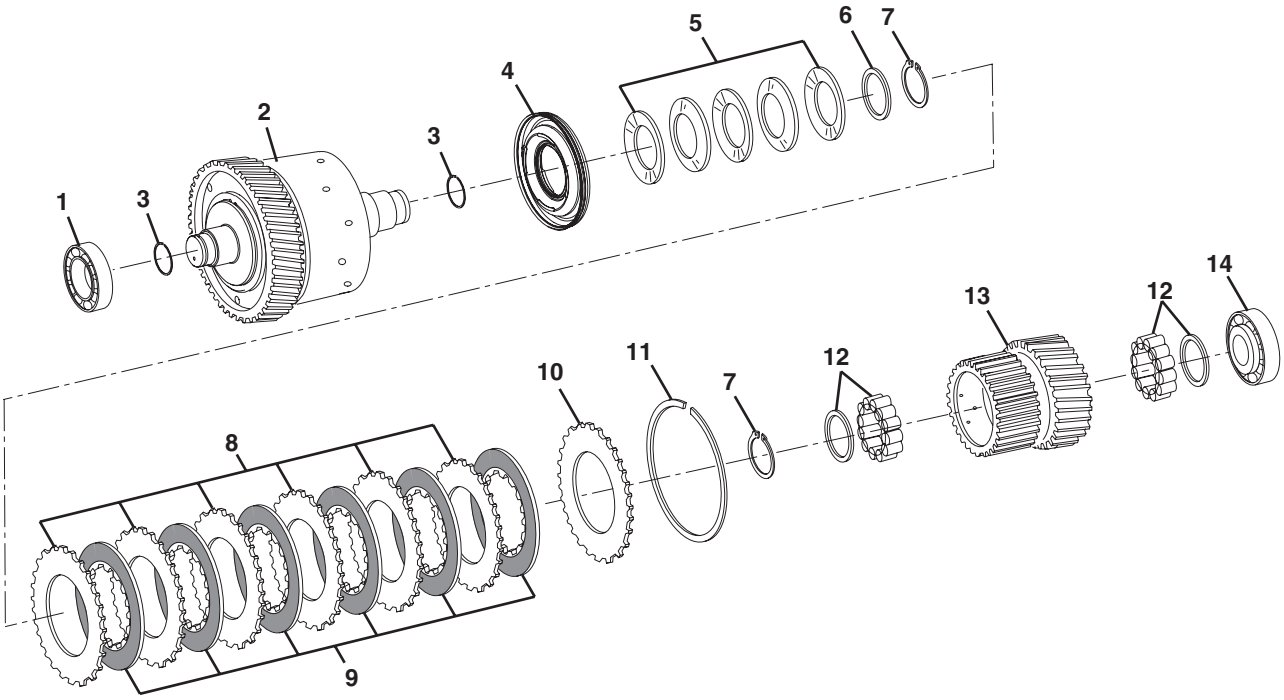

PU2160

Figure 5-22 ZF Transmission - Coupling Group 2

Item	Part Number	Qty.	Description	Rev.
1	1319615	1	ROLLER BEARING	
2	7027264	1	COUPLING, (used with transmission - 4WG92 TSC)	
	7026763	1	COUPLING, (used with transmission - 4WG98 TSC)	
3	7026761	2	PISTON RING	
4	8036575	1	PISTON	
5	1319595	5	CUP SPRING	
6	1319596	1	SHIM	
7	10731845	2	RETAINING RING	
8	7026759	A/R	O. CLUTCH DISC, (transmission - 4WG92 TSC qty. 6, 4WG98 TSC qty. 8)	
9	7026758	A/R	LIN. CLUTCH DISC, (transmission - 4WG92 TSC qty. 6, 4WG98 TSC qty. 8)	
10	7026760	1	END SHIM	
11	1319600	1	SNAP RING, 3.5mm	
	1319601	1	SNAP RING, 3.5mm	
	1319602	1	SNAP RING, 3.0mm	
	1319603	1	SNAP RING, 2.5mm	
	1319604	1	SNAP RING, 2.0mm	
	7029849	1	SNAP RING, 3.25mm	
	7029850	1	SNAP RING, 3.75mm	
	7029851	1	SNAP RING, 2.25mm	
	7029852	1	SNAP RING, 2.75mm	
12	1319606	2	ROLLER CAGE	
13	1319614	1	DISC CARRIER	
14	7029532	1	OUTER RING	
	7029533	1	INNER RING	

Figure 5-22 ZF Transmission - Coupling Group 2

944E

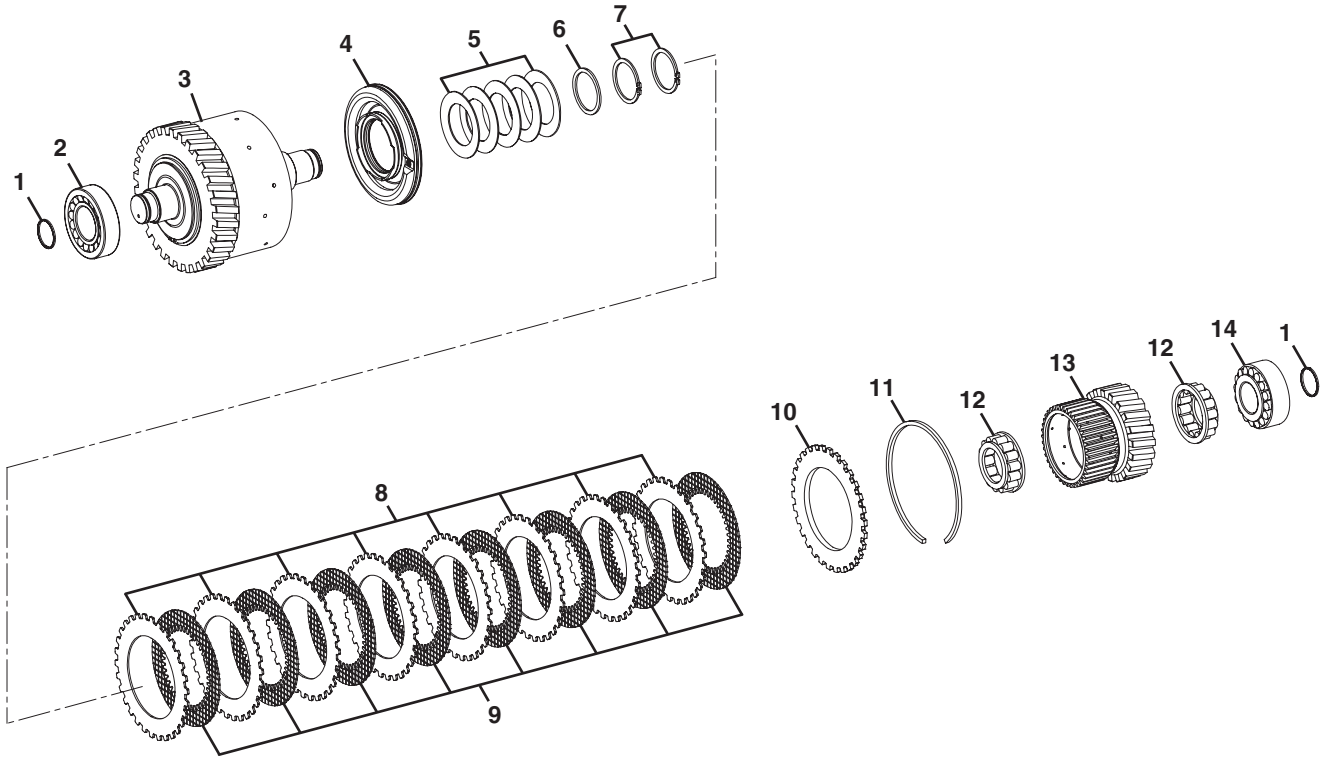

PU2170

Figure 5-22 ZF Transmission - Coupling Group 2

Item	Part Number	Qty.	Description	Rev.
1	7026761	2	PISTON RING	
2	1319615	1	ROLLER BEARING	
3	7026763	1	COUPLING	
4	8036575	1	PISTON	
5	1319595	5	CUP SPRING	
6	1319596	1	SHIM	
7	10731845	2	RETAINING RING	
8	7026759	8	O. CLUTCH DISC	
9	7026758	8	LIN. CLUTCH DISC	
10	7026760	1	END SHIM	
11	1319600	1	SNAP RING, 3.5mm	
	1319601	1	SNAP RING, 3.5mm	
	1319602	1	SNAP RING, 3.0mm	
	1319603	1	SNAP RING, 2.5mm	
	1319604	1	SNAP RING, 2.0mm	
	7029849	1	SNAP RING, 3.25mm	
	7029850	1	SNAP RING, 3.75mm	
	7029851	1	SNAP RING, 2.25mm	
	7029852	1	SNAP RING, 2.75mm	
12	1319606	2	ROLLER CAGE	
13	1319614	1	DISC CARRIER	
14	7029532	1	OUTER RING	
	7029533	1	INNER RING	

Figure 5-23 ZF Transmission - Coupling Group 3

644E

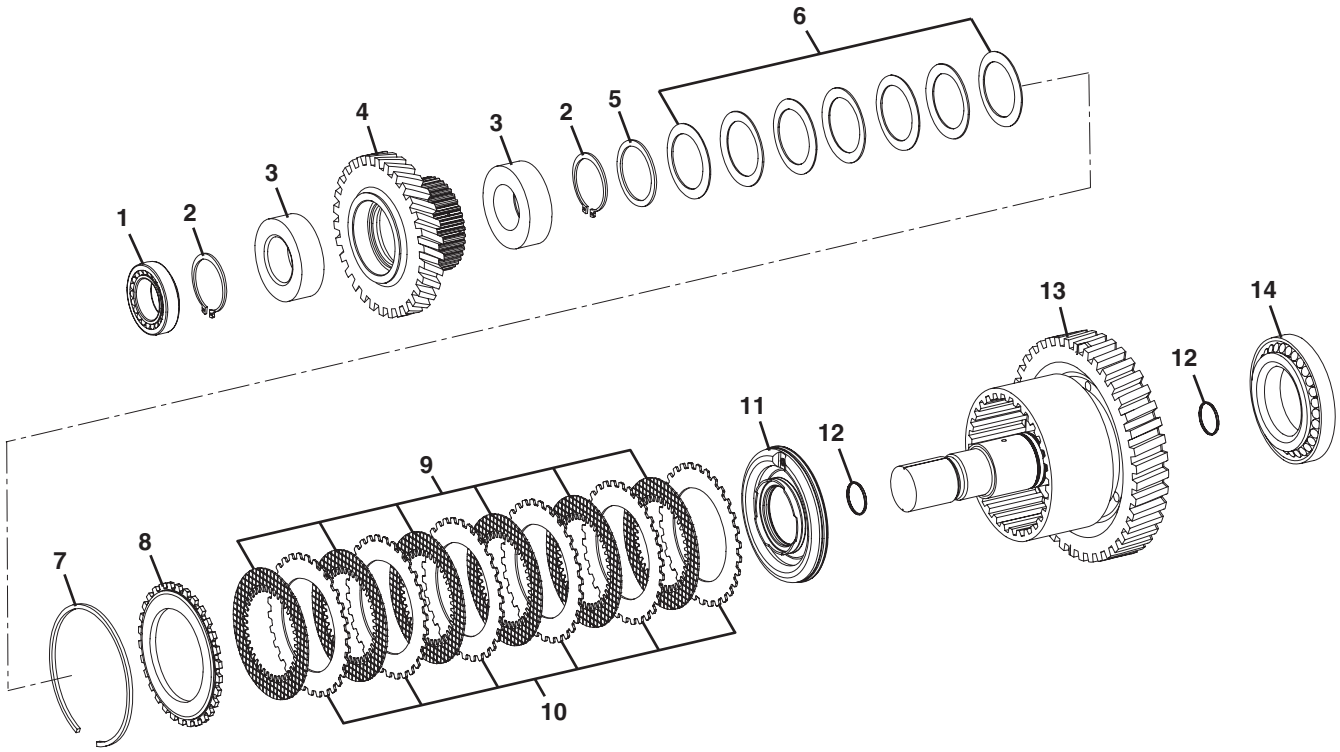

PU2180

Figure 5-23 ZF Transmission - Coupling Group 3

Item	Part Number	Qty.	Description	Rev.
1		1	ROLLER BEARING ASSY	
	70021268	1	BEARING OUTER RING	
	70021269	1	BEARING INNER RING	
2	1321177	2	RETAINING RING, (used with transmission - 4WG92 TSC)	
	80304227	2	RETAINING RING, (used with transmission - 4WG98 TSC)	
3		2	ROLLER BEARING ASSY	
	70021227	1	RING	
	70021228	1	ROLLER CAGE	
4	7027267	1	DISC CARRIER, (used with transmission - 4WG92 TSC)	
	1319619	1	DISC CARRIER, (used with transmission - 4WG98 TSC)	
5	7026766	1	WASHER	
6	7026765	7	CUP SPRING	
7	1319600	1	SNAP RING, 3.5mm	
	1319601	1	SNAP RING, 3.5mm	
	1319602	1	SNAP RING, 3.0mm	
	1319603	1	SNAP RING, 2.5mm	
	1319604	1	SNAP RING, 2.0mm	
	7029849	1	SNAP RING, 3.25mm	
	7029850	1	SNAP RING, 3.75mm	
	7029851	1	SNAP RING, 2.25mm	
	7029852	1	SNAP RING, 2.75mm	
8	7026760	1	END SHIM	
9	7026758	A/R	LIN. CLUTCH DISC, (transmission - 4WG92 TSC qty. 6, 4WG98 TSC qty. 8)	
10	7026759	A/R	O. CLUTCH DISC, (transmission - 4WG92 TSC qty. 6, 4WG98 TSC qty. 8)	
11	8036575	1	PISTON	
12	7026761	2	PISTON RING	
13	7027266	1	COUPLING, (used with transmission - 4WG92 TSC)	
	7026764	1	COUPLING, (used with transmission - 4WG98 TSC)	
14	7026769	1	ROLLER BEARING	

Figure 5-23 ZF Transmission - Coupling Group 3

944E

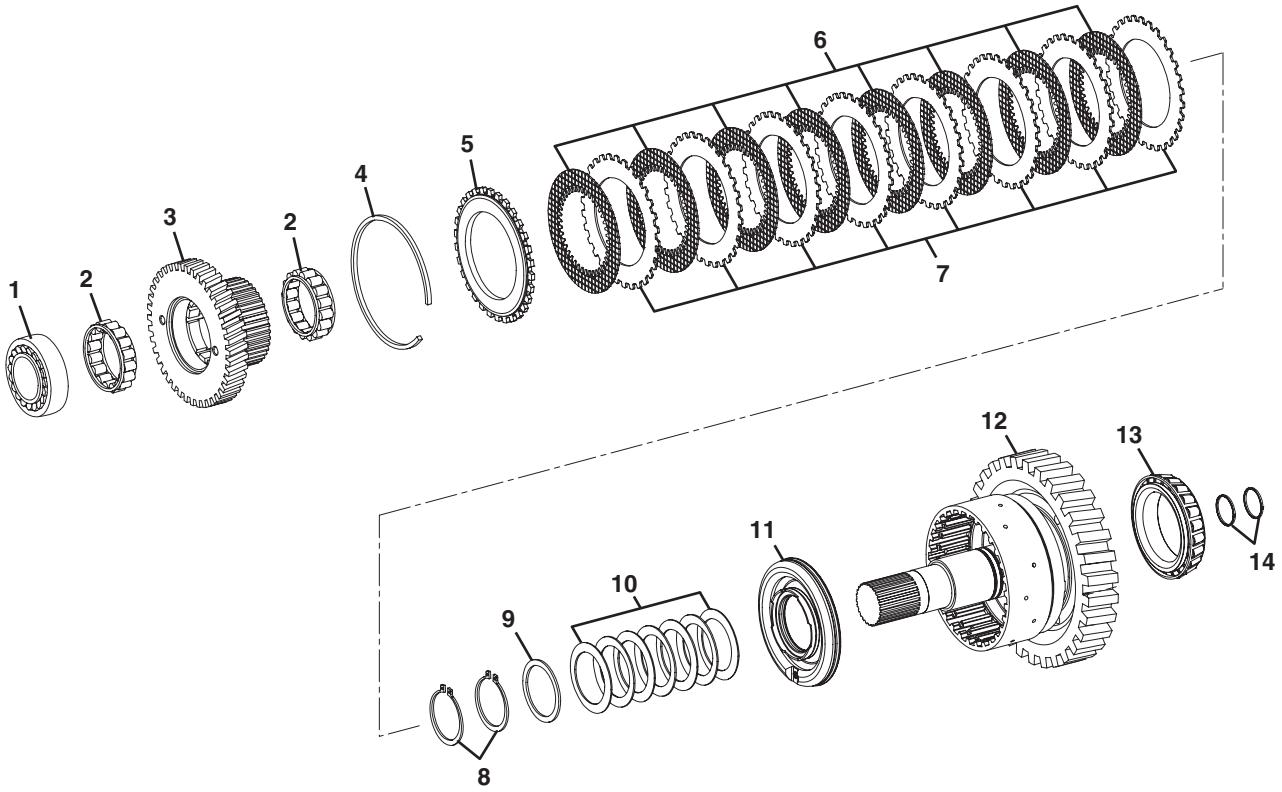

PU2190

Figure 5-23 ZF Transmission - Coupling Group 3

Item	Part Number	Qty.	Description	Rev.
1	7026768	1	ROLLER BEARING	
2	7026767	2	ROLLER BEARING	
3	1319619	1	DISC CARRIER	
4	1319600	1	SNAP RING, 3.5mm	
	1319601	1	SNAP RING, 3.5mm	
	1319602	1	SNAP RING, 3.0mm	
	1319603	1	SNAP RING, 2.5mm	
	1319604	1	SNAP RING, 2.0mm	
	7029849	1	SNAP RING, 3.25mm	
	7029850	1	SNAP RING, 3.75mm	
	7029851	1	SNAP RING, 2.25mm	
	7029852	1	SNAP RING, 2.75mm	
5	7026760	1	END SHIM	
6	7026758	8	LIN. CLUTCH DISC	
7	7026759	8	O. CLUTCH DISC	
8	80304227	2	RETAINING RING	
9	7026766	1	WASHER	
10	7026765	7	CUP SPRING	
11	8036575	1	PISTON	
12	7026764	1	COUPLING	
13	7026769	1	ROLLER BEARING	
14	7026761	2	PISTON RING	

Figure 5-24 ZF Transmission - Coupling Group 4

644E

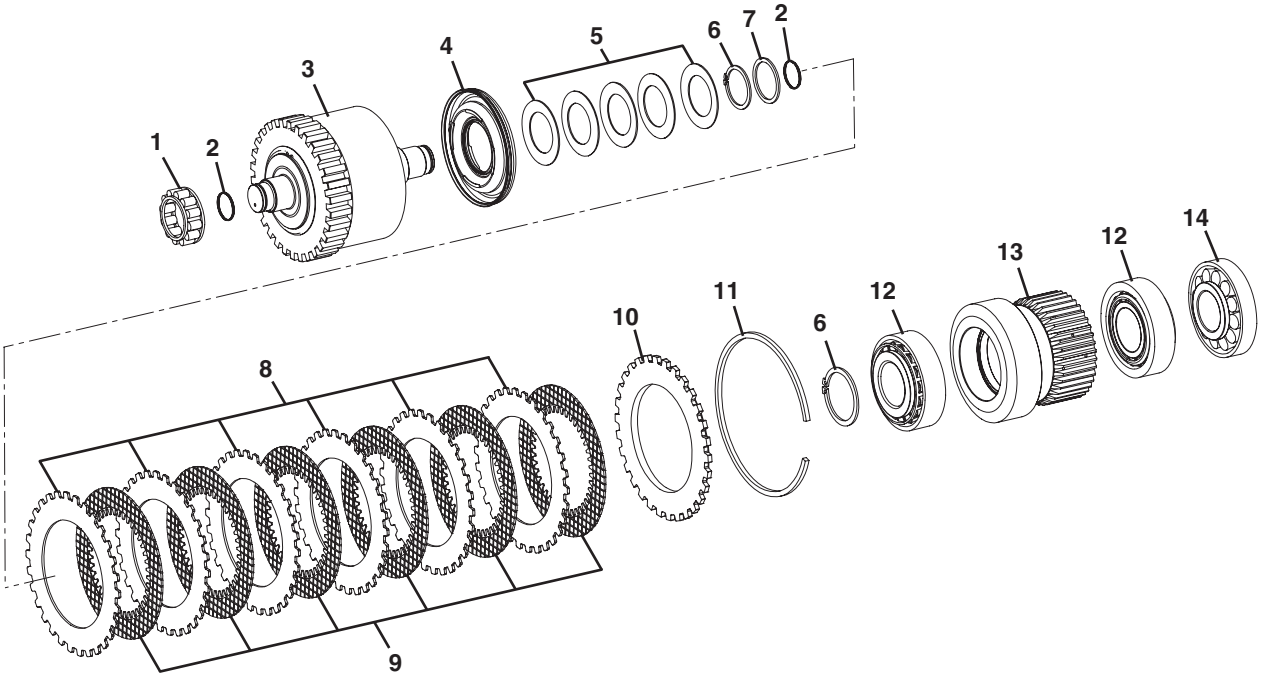

PU2200

Figure 5-24 ZF Transmission - Coupling Group 4

Item	Part Number	Qty.	Description	Rev.
1	1319615	1	ROLLER BEARING	
2	7026761	2	PISTON RING	
3	7027268	1	COUPLING, (used with transmission - 4WG92 TSC)	
	7026770	1	COUPLING, (used with transmission - 4WG98 TSC)	
4	8036575	1	PISTON	
5	1319595	5	CUP SPRING	
6	10731845	2	RETAINING RING	
7	1319596	1	SHIM, 2.0mm	
8	7026759	A/R	O. CLUTCH DISC, (transmission - 4WG92 TSC qty. 6, 4WG98 TSC qty. 8)	
9	7026758	A/R	LIN. CLUTCH DISC, (transmission - 4WG92 TSC qty. 6, 4WG98 TSC qty. 8)	
10	7026760	1	END SHIM	
11	1319600	1	SNAP RING, 3.5mm	
	1319601	1	SNAP RING, 3.5mm	
	1319602	1	SNAP RING, 3.0mm	
	1319603	1	SNAP RING, 2.5mm	
	1319604	1	SNAP RING, 2.0mm	
12	1319606	2	ROLLER CAGE	
13	1319635	1	DISC CARRIER	
14	1319636	1	ROLLER BEARING	

Figure 5-24 ZF Transmission - Coupling Group 4

944E

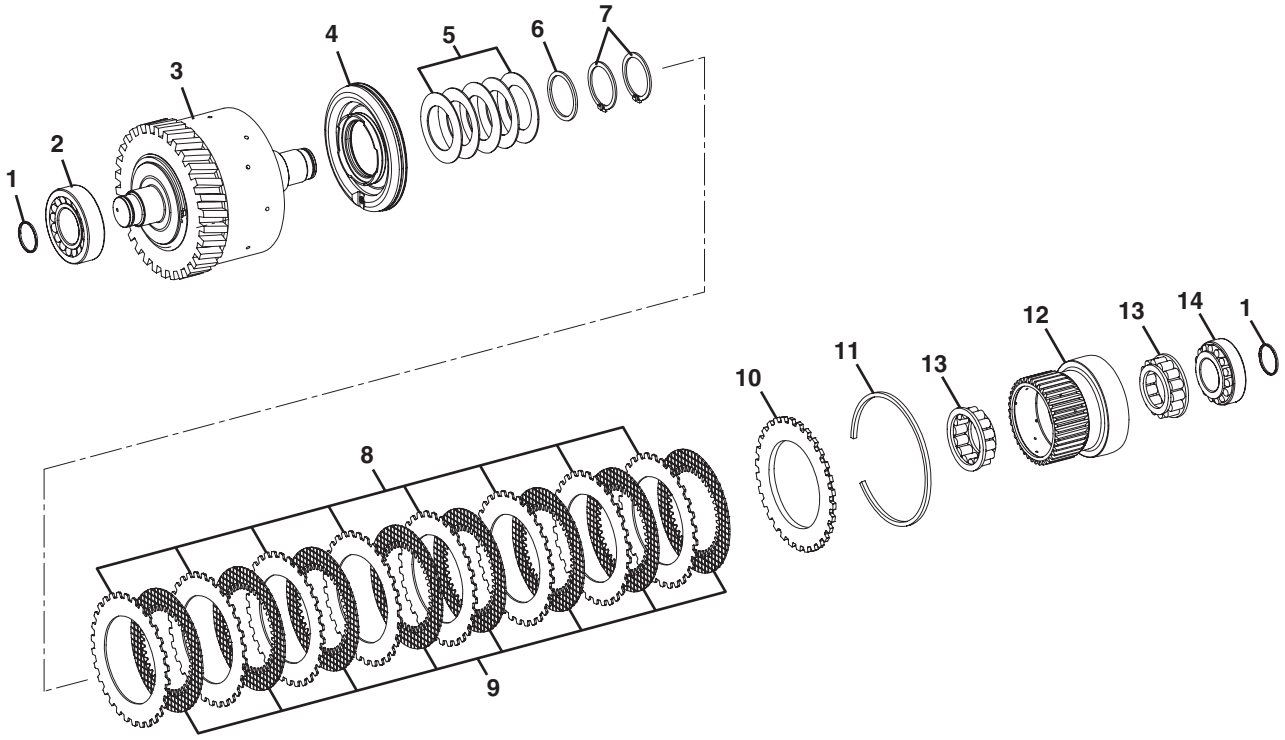

PU2210

Figure 5-24 ZF Transmission - Coupling Group 4

Item	Part Number	Qty.	Description	Rev.
1	7026761	2	PISTON RING	
2	1319615	1	ROLLER BEARING	
3	7026770	1	COUPLING	
4	8036575	1	PISTON	
5	1319595	5	CUP SPRING	
6	1319596	1	SHIM, 2.0mm	
7	10731845	2	RETAINING RING	
8	7026759	8	O. CLUTCH DISC	
9	7026758	8	LIN. CLUTCH DISC	
10	7026760	1	END SHIM	
11	1319600	1	SNAP RING, 3.5mm	
	1319601	1	SNAP RING, 3.5mm	
	1319602	1	SNAP RING, 3.0mm	
	1319603	1	SNAP RING, 2.5mm	
	1319604	1	SNAP RING, 2.0mm	
12	1319635	1	DISC CARRIER	
13	1319606	2	ROLLER CAGE	
14	1319636	1	ROLLER BEARING	

Figure 5-25 ZF Transmission - Reversing Gear Group CV

644E

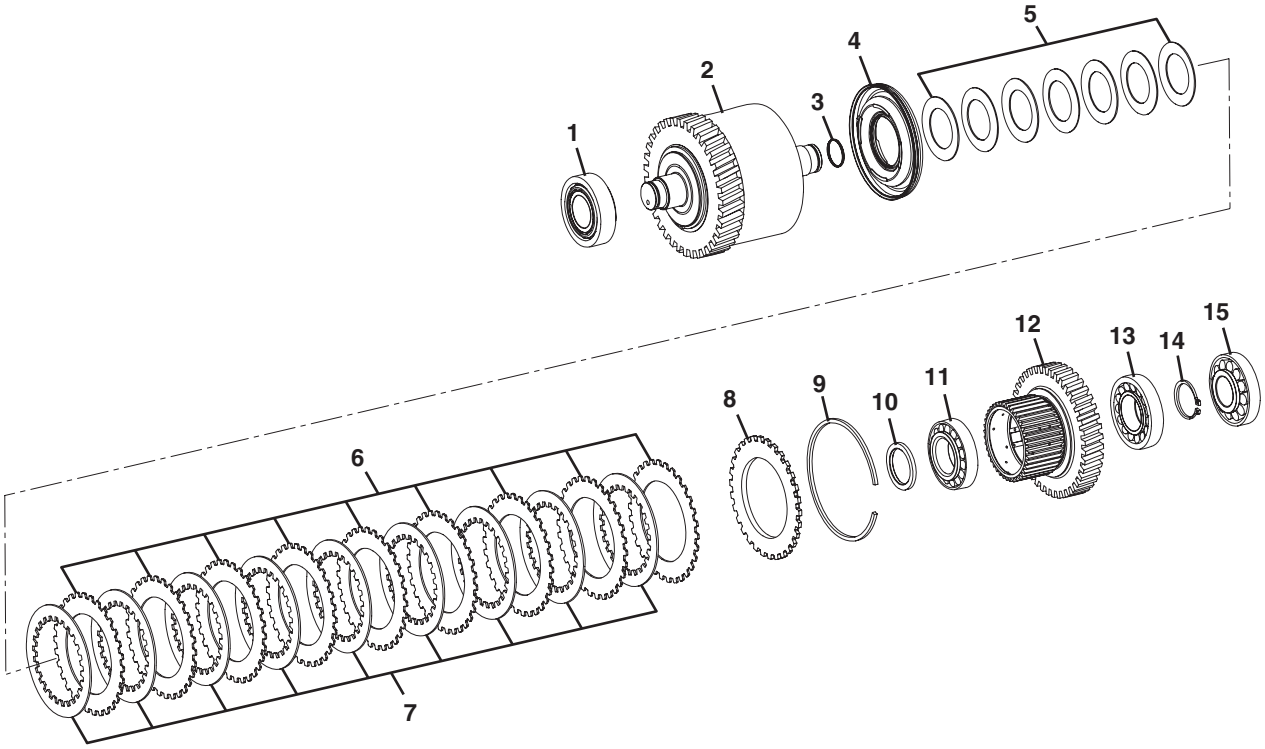

PU2220

Figure 5-25 ZF Transmission - Reversing Gear Group CV

Item	Part Number	Qty.	Description	Rev.
1	1319615	1	ROLLER BEARING	
2	7027258	1	COUPLING, (used with transmission - 4WG92 TSC)	
	7026757	1	COUPLING, (used with transmission - 4WG98 TSC)	
3	7026761	1	PISTON RING	
4	8036575	1	PISTON	
5	1319595	7	CUP SPRING	
6	7026759	A/R	O. CLUTCH DISC, (transmission - 4WG92 TSC qty. 9, 4WG98 TSC qty. 11)	
7	7027259	9	LIN. CLUTCH DISC, (used with transmission - 4WG92 TSC)	
	7026758	11	LIN. CLUTCH DISC, (used with transmission - 4WG98 TSC)	
8	7026760	1	END SHIM	
9	1319600	1	SNAP RING, 3.5mm	
	1319601	1	SNAP RING, 3.5mm	
	1319602	1	SNAP RING, 3.0mm	
	1319603	1	SNAP RING, 2.5mm	
	1319604	1	SNAP RING, 2.0mm	
	7029849	1	SNAP RING, 3.25mm	
	7029850	1	SNAP RING, 3.75mm	
	7029851	1	SNAP RING, 2.25mm	
	7029852	1	SNAP RING, 2.75mm	
10	1319617	1	SUPPORT SHIM	
11	1319618	1	ROLLER BEARING	
12	1319638	1	DISC CARRIER	
13	1319620	1	ROLLER BEARING	
14	1319621	1	RETAINING RING, 3.20mm	
	1319622	1	RETAINING RING, 3.10mm	
	1319623	1	RETAINING RING, 3.00mm	
	1319624	1	RETAINING RING, 2.90mm	
	1319625	1	RETAINING RING, 2.80mm	
	1319626	1	RETAINING RING, 2.70mm	
	1319627	1	RETAINING RING, 2.60mm	
	1319628	1	RETAINING RING, 2.50mm	
	1319629	1	RETAINING RING, 2.40mm	
	1319630	1	RETAINING RING, 2.30mm	
	1319631	1	RETAINING RING, 2.20mm	
	1319632	1	RETAINING RING, 2.10mm	
15	1319636	1	ROLLER BEARING	

Figure 5-25 ZF Transmission - Reversing Gear Group CV

944E

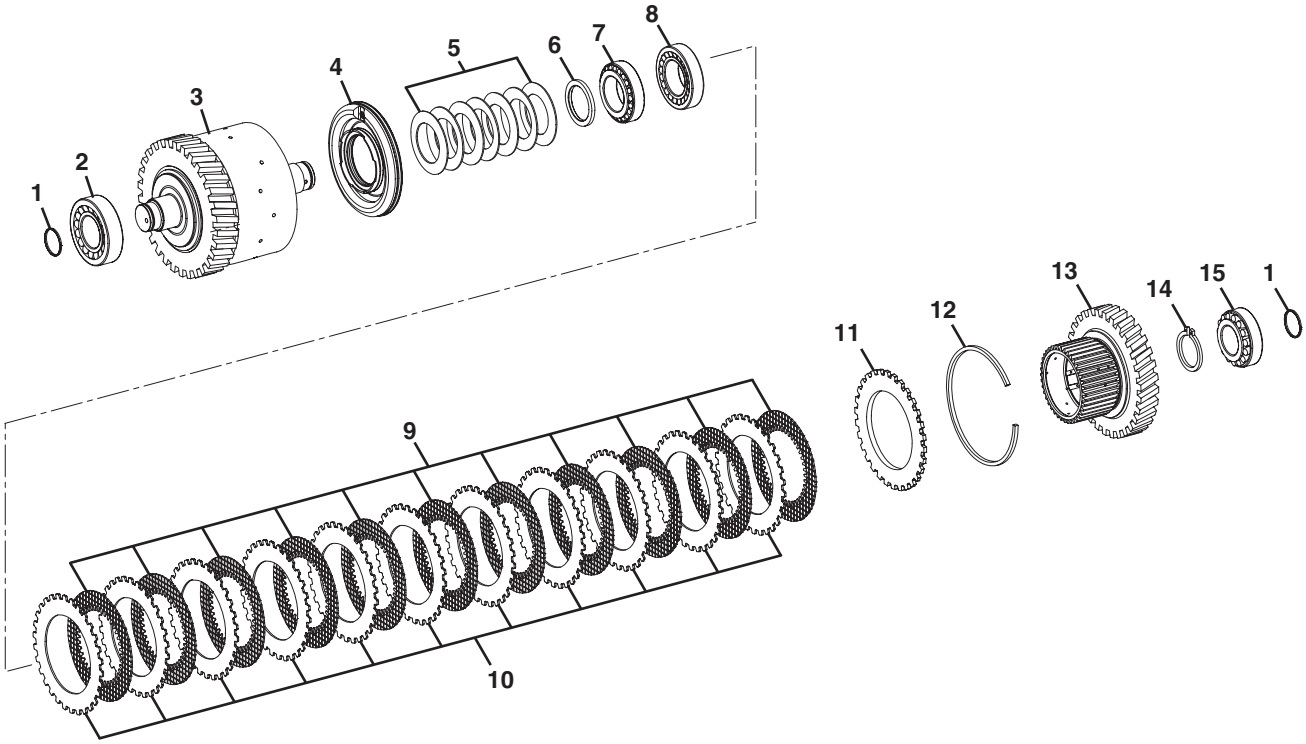

PU2230

Figure 5-25 ZF Transmission - Reversing Gear Group CV

Item	Part Number	Qty.	Description	Rev.
1	7026761	2	PISTON RING	
2	1319615	1	ROLLER BEARING	
3	7026757	1	COUPLING	
4	8036575	1	PISTON	
5	1319595	7	CUP SPRING	
6	1319617	1	SUPPORT SHIM	
7	1319618	1	ROLLER BEARING	
8	1319620	1	ROLLER BEARING	
9	7026758	11	LIN. CLUTCH DISC	
10	7026759	11	O. CLUTCH DISC	
11	7026760	1	END SHIM	
12	1319600	1	SNAP RING, 3.5mm	
	1319601	1	SNAP RING, 3.5mm	
	1319602	1	SNAP RING, 3.0mm	
	1319603	1	SNAP RING, 2.5mm	
	1319604	1	SNAP RING, 2.0mm	
	7029849	1	SNAP RING, 3.25mm	
	7029850	1	SNAP RING, 3.75mm	
	7029851	1	SNAP RING, 2.25mm	
	7029852	1	SNAP RING, 2.75mm	
13	1319638	1	DISC CARRIER	
14	1319621	1	RETAINING RING, 3.20mm	
	1319622	1	RETAINING RING, 3.10mm	
	1319623	1	RETAINING RING, 3.00mm	
	1319624	1	RETAINING RING, 2.90mm	
	1319625	1	RETAINING RING, 2.80mm	
	1319626	1	RETAINING RING, 2.70mm	
	1319627	1	RETAINING RING, 2.60mm	
	1319628	1	RETAINING RING, 2.50mm	
	1319629	1	RETAINING RING, 2.40mm	
	1319630	1	RETAINING RING, 2.30mm	
	1319631	1	RETAINING RING, 2.20mm	
	1319632	1	RETAINING RING, 2.10mm	
15	1319636	1	ROLLER BEARING	

Figure 5-26 ZF Transmission - Reversing Gear Group CR

644E

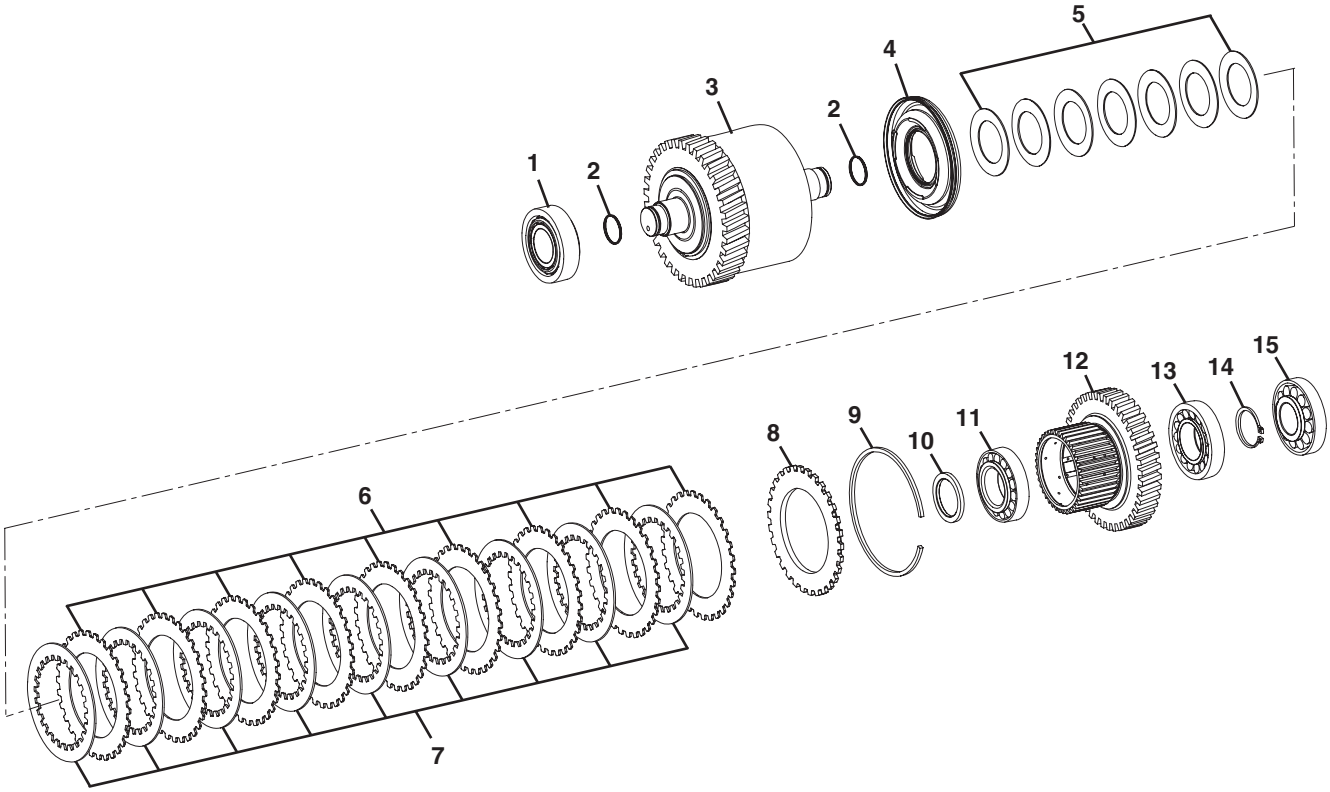

PU2240

Figure 5-26 ZF Transmission - Reversing Gear Group CR

Item	Part Number	Qty.	Description	Rev.
1	1319615	1	ROLLER BEARING	
2	7026761	2	PISTON RING	
3	7027260	1	COUPLING, (used with transmission - 4WG92 TSC)	
	7026762	1	COUPLING, (used with transmission - 4WG98 TSC)	
4	8036575	1	PISTON	
5	1319595	7	CUP SPRING	
6	7026759	A/R	O. CLUTCH DISC, (transmission - 4WG92 TSC qty. 9, 4WG98 TSC qty. 11)	
7	7027259	9	LIN. CLUTCH DISC, (used with transmission - 4WG92 TSC)	
	7026758	11	LIN. CLUTCH DISC, (used with transmission - 4WG98 TSC)	
8	7026760	1	END SHIM	
9	1319600	1	SNAP RING, 3.5mm	
	1319601	1	SNAP RING, 3.5mm	
	1319602	1	SNAP RING, 3.0mm	
	1319603	1	SNAP RING, 2.5mm	
	1319604	1	SNAP RING, 2.0mm	
	7029849	1	SNAP RING, 3.25mm	
	7029850	1	SNAP RING, 3.75mm	
	7029851	1	SNAP RING, 2.25mm	
	7029852	1	SNAP RING, 2.75mm	
10	1319617	1	SUPPORT SHIM	
11	1319618	1	ROLLER BEARING	
12	1319638	1	DISC CARRIER	
13	1319620	1	ROLLER BEARING	
14	1319621	1	RETAINING RING, 3.20mm	
	1319622	1	RETAINING RING, 3.10mm	
	1319623	1	RETAINING RING, 3.00mm	
	1319624	1	RETAINING RING, 2.90mm	
	1319625	1	RETAINING RING, 2.80mm	
	1319626	1	RETAINING RING, 2.70mm	
	1319627	1	RETAINING RING, 2.60mm	
	1319628	1	RETAINING RING, 2.50mm	
	1319629	1	RETAINING RING, 2.40mm	
	1319630	1	RETAINING RING, 2.30mm	
	1319631	1	RETAINING RING, 2.20mm	
	1319632	1	RETAINING RING, 2.10mm	
15	1319636	1	ROLLER BEARING	

Figure 5-26 ZF Transmission - Reversing Gear Group CR

944E

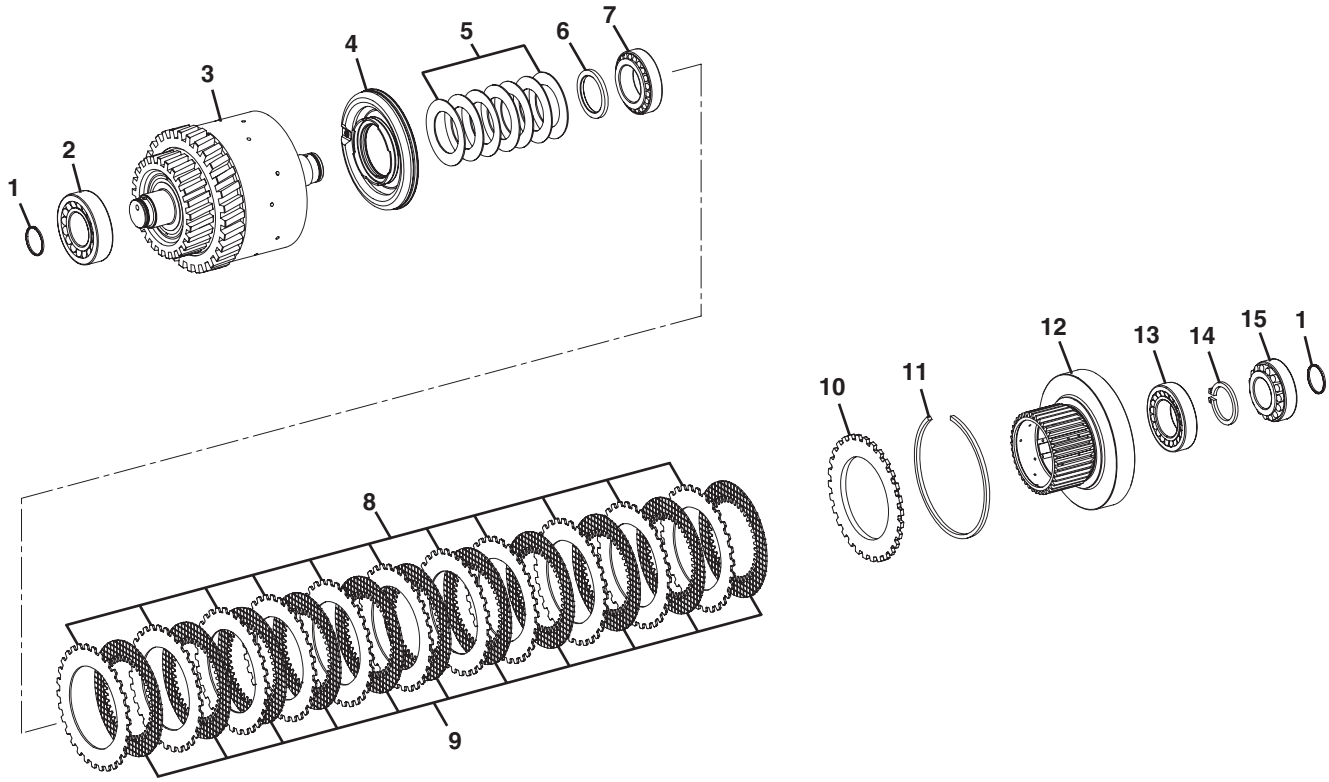

PU2250

Figure 5-26 ZF Transmission - Reversing Gear Group CR

Item	Part Number	Qty.	Description	Rev.
1	7026761	2	PISTON RING	
2	1319615	1	ROLLER BEARING	
3	7026762	1	COUPLING	
4	8036575	1	PISTON	
5	1319595	7	CUP SPRING	
6	1319617	1	SUPPORT SHIM	
7	1319618	1	ROLLER BEARING	
8	7026759	11	O. CLUTCH DISC	
9	7026758	11	LIN. CLUTCH DISC	
10	7026760	1	END SHIM	
11	1319600	1	SNAP RING, 3.5mm	
	1319601	1	SNAP RING, 3.5mm	
	1319602	1	SNAP RING, 3.0mm	
	1319603	1	SNAP RING, 2.5mm	
	1319604	1	SNAP RING, 2.0mm	
	7029849	1	SNAP RING, 3.25mm	
	7029850	1	SNAP RING, 3.75mm	
	7029851	1	SNAP RING, 2.25mm	
	7029852	1	SNAP RING, 2.75mm	
12	1319638	1	DISC CARRIER	
13	1319620	1	ROLLER BEARING	
14	1319621	1	RETAINING RING, 3.20mm	
	1319622	1	RETAINING RING, 3.10mm	
	1319623	1	RETAINING RING, 3.00mm	
	1319624	1	RETAINING RING, 2.90mm	
	1319625	1	RETAINING RING, 2.80mm	
	1319626	1	RETAINING RING, 2.70mm	
	1319627	1	RETAINING RING, 2.60mm	
	1319628	1	RETAINING RING, 2.50mm	
	1319629	1	RETAINING RING, 2.40mm	
	1319630	1	RETAINING RING, 2.30mm	
	1319631	1	RETAINING RING, 2.20mm	
	1319632	1	RETAINING RING, 2.10mm	
15	1319636	1	ROLLER BEARING	

Figure 5-27 ZF Transmission - Oil Pump

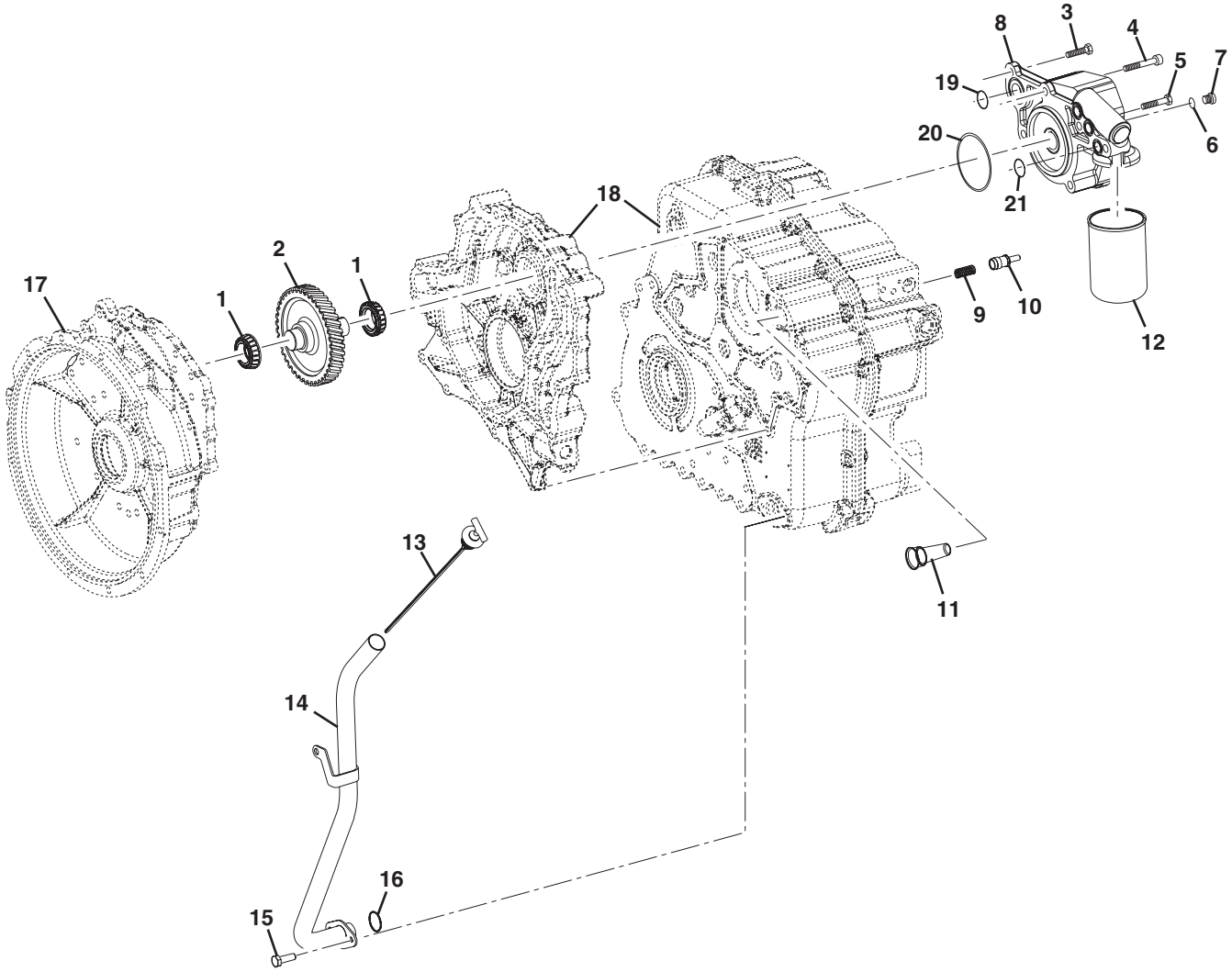

Figure 5-27 ZF Transmission - Oil Pump

Item	Part Number	Qty.	Description	Rev.
1	1319608	2	ROLLER BEARING	
2	7026773	1	SHAFT	
3	80304394	1	HEX SCREW, M10X30	
4	7026793	4	CAPSCREW, M12X80	
5	7026794	1	HEX SCREW, M10X50	
6	10731709	2	O-RING	
7	1319670	2	SCREW PLUG, M10X1	
8	7026791	1	PUMP	
9	7026784	1	COMPRESSION SPRING	
10	7026783	1	PISTON	
11	7026782	1	VALVE	
12	1319726	1	FILTER	
13	8841322	1	OIL DIPSTICK	
14	1001095744	1	DIPSTICK TUBE	
15	1319585	2	CAPSCREW, M8X16	
16	1319581	1	O-RING	
17		Ref	BELL CONVERTER, (see Figure 5-19 for details)	
18		Ref	GEARBOX HOUSING, (see Figure 5-20 for details)	
19	1319719	1	O-RING	
20	7029417	1	O-RING	
21	7026792	3	O-RING	

Figure 5-28 ZF Transmission - Control Unit

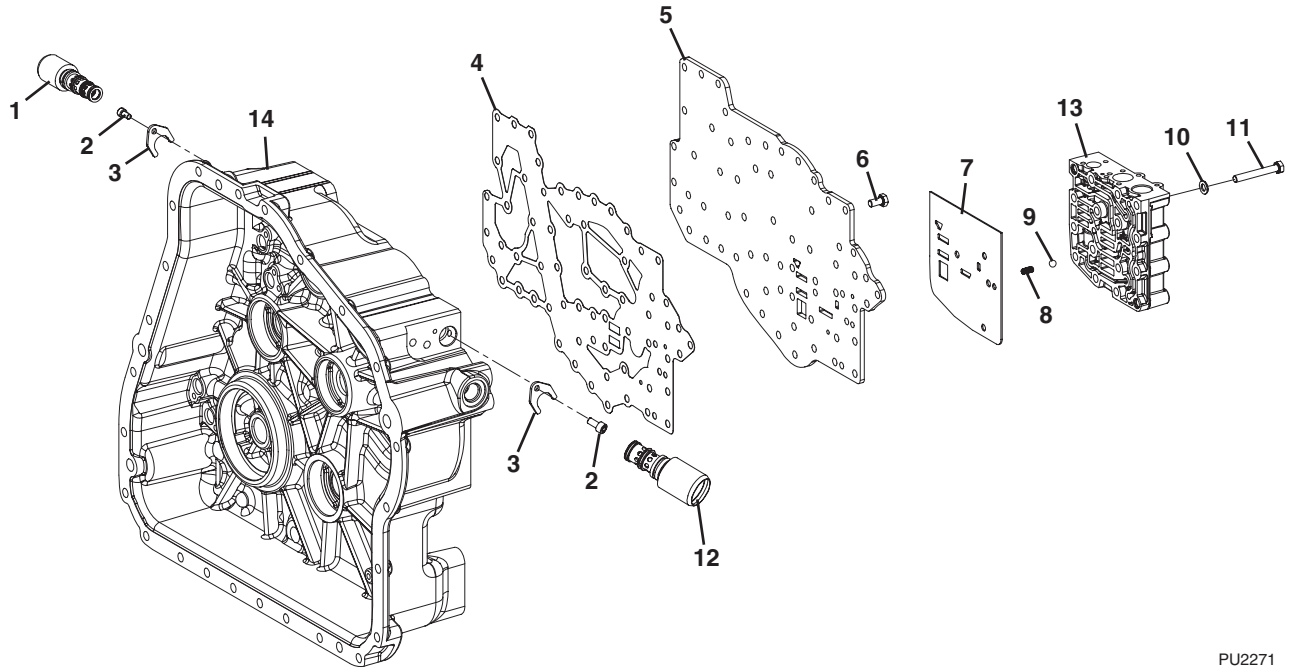

Figure 5-28 ZF Transmission - Control Unit

Item	Part Number	Qty.	Description	Rev.
1	8036529	3	SOLENOID VALVE	
2	7029715	4	CAPSCREW	
3	7029267	4	BRACKET	
4	7026776	1	GASKET	
5	7026777	1	PLATE	
6	7026780	46	HEX SCREW, M8X16	
7	7026779	1	INTERM. SHEET	
8	7026778	1	COMPRESSION SPRING	
9	10731761	1	BALL	
10	10732095	16	WASHER	
11	7026781	16	HEX SCREW	
12	8036528	1	SOLENOID VALVE	
13		Ref	GEARSHIFT SYSTEM, (see Figure 5-29 for details)	
14		Ref	GEARBOX HOUSING, (see Figure 5-20 for details)	

Figure 5-29 ZF Transmission - Gearshift System

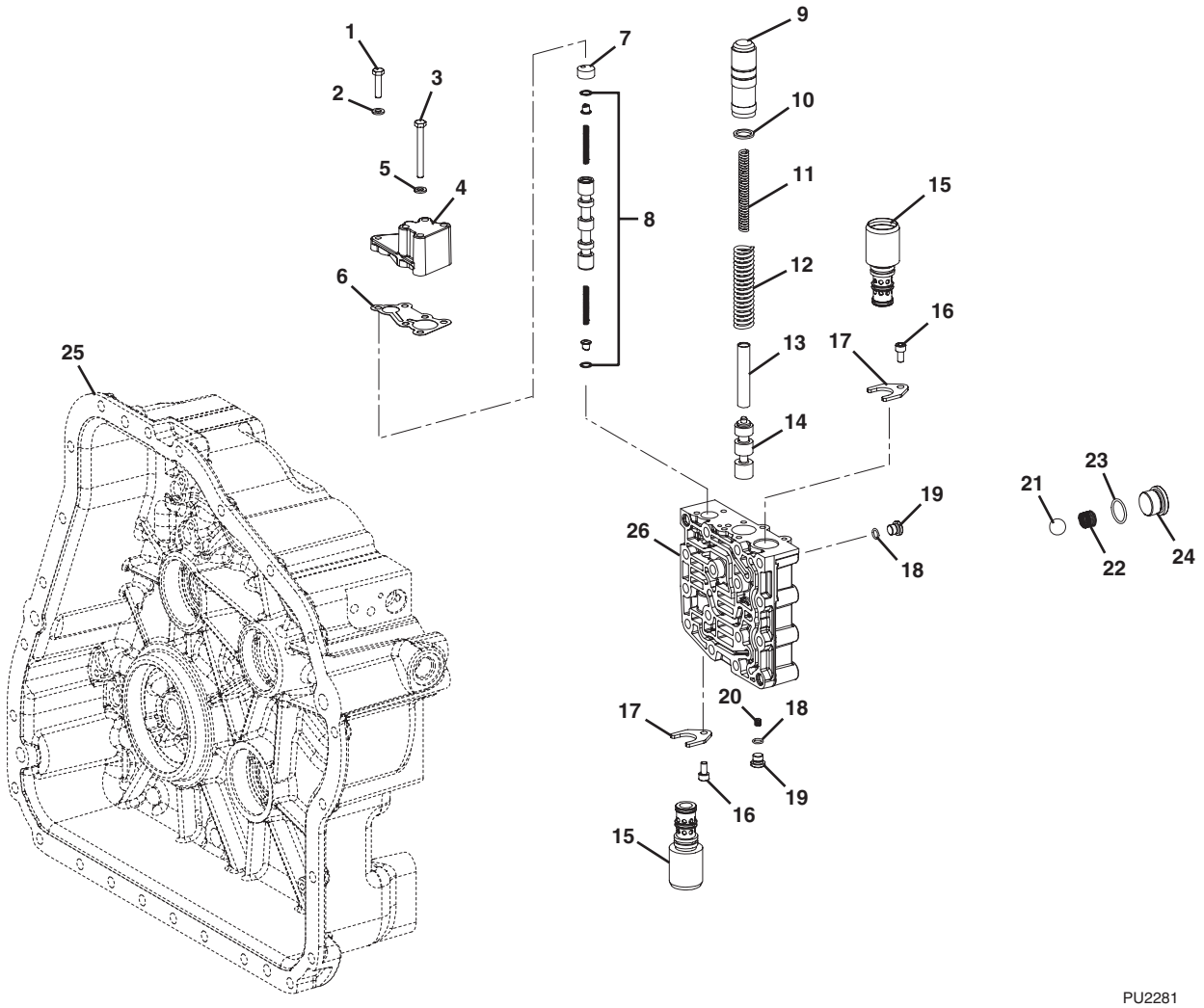

PU2280

Figure 5-29 ZF Transmission - Gearshift System

Item	Part Number	Qty.	Description	Rev.
1	1319693	2	HEX SCREW, M6X25	
2	1319661	2	WASHER	
3	1321265	4	HEX SCREW, M6X55	
4	7026789	1	COVER	
5	1319661	4	WASHER	
6	7026788	1	GASKET	
7	7026787	1	SPACER	
8	1319694	1	VALVE	
9	7026790	1	PISTON	
10	1319685	1	WASHER, 2.0mm	
	1319686	1	WASHER, 1.0mm	
	1319687	1	WASHER, 0.5mm	
	1319688	1	WASHER, 0.3mm	
	1319689	1	WASHER, 0.2mm	
11	1319684	1	COMPRESSION SPRING	
12	1319683	1	COMPRESSION SPRING	
13	7026786	1	SLEEVE	
14	7026785	1	CONTROL PISTON	
15	8036528	2	SOLENOID VALVE	
16	7029715	2	CAPSCREW, M6X12	
17	7029267	2	BRACKET	
18	10731709	2	O-RING	
19	1319670	2	SCREW PLUG	
20	1319652	1	ORIFICE	
21	10732071	2	BALL	
22	10732072	2	COMPRESSION SPRING	
23	70000656	2	O-RING	
24		2	SCREW PLUG, M24X1.5	
25		Ref	GEARBOX HOUSING, (see Figure 5-20 for details)	
26	70022790	1	VALVE HOUSING	

Figure 5-30 ZF Transmission - Transfer Box

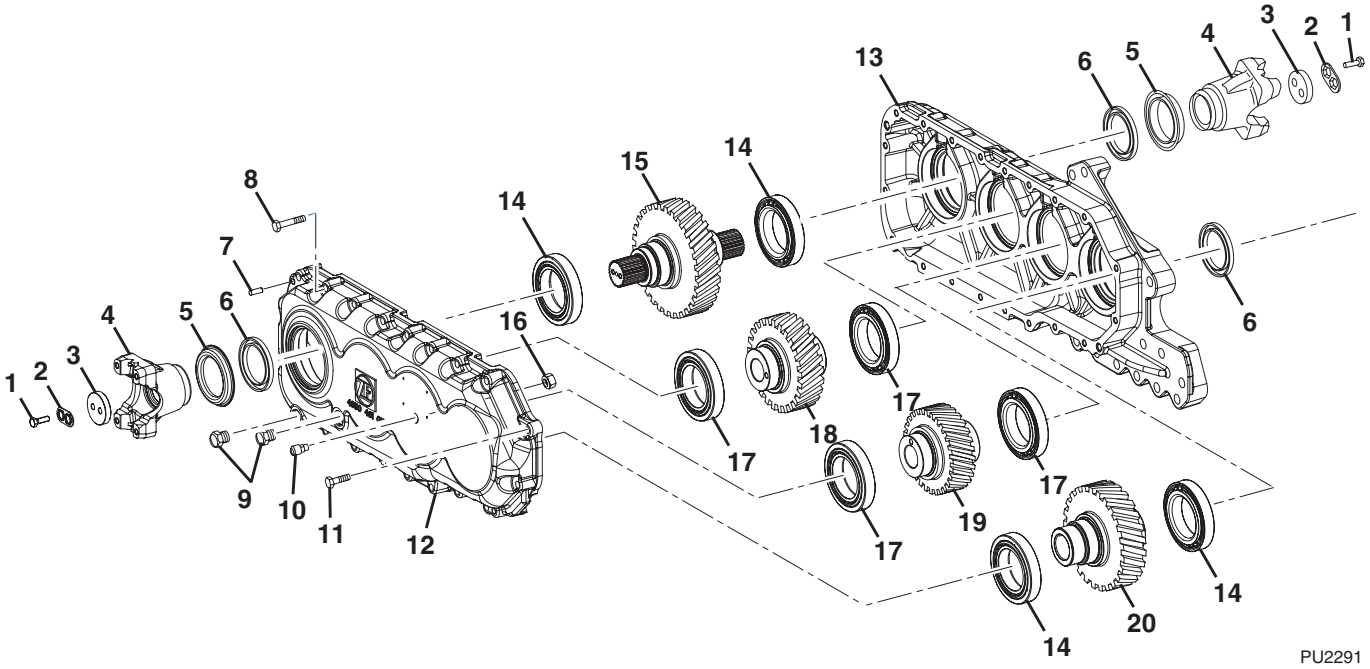

Figure 5-30 ZF Transmission - Transfer Box

Item	Part Number	Qty.	Description	Rev.
	7026618	1	TRANSFER BOX ASSY, (includes items 1 thru 20)	
1	70020197	4	HEX HD CAPSCREW, M8X25mm	
2	7029033	2	TAB WASHER	
3	1319648	2	WASHER	
4	7027273	2	YOKE	
5	1319647	2	SCREEN SHEET	
6	1320755	3	SHAFT SEAL	
7	1319571	2	DOWEL, M6X24	
8	7026794	19	HEXAGON SCREW	
9	1319578	2	SCREW PLUG	
10	10731744	1	BREATHER	
11	80304394	1	HEXAGON SCREW	
12	70020355	1	HOUSING	
13	70020354	1	HOUSING	
14	7026769	4	TAPERED ROLLER BEARING	
15	7027271	1	OUT SHAFT	
16	7026578	1	HEX NUT, M16	
17	1320748	4	OUTER RING OF ROLLER BEARING ASSY	
	1320754	4	INNER RING OF ROLLER BEARING ASSY	
18	7027272	1	IDLER GEAR	
19	7027270	1	IDLER GEAR	
20	70020035	1	INPUT SHAFT	
	70020036	1	SEAL	
21	8526056	AR	GASKET ELIMINATOR LOCTITE, #518, (not shown)	
22	8526052	AR	LOCTITE, #277, (not shown)	

Figure 5-31 Drive Shafts

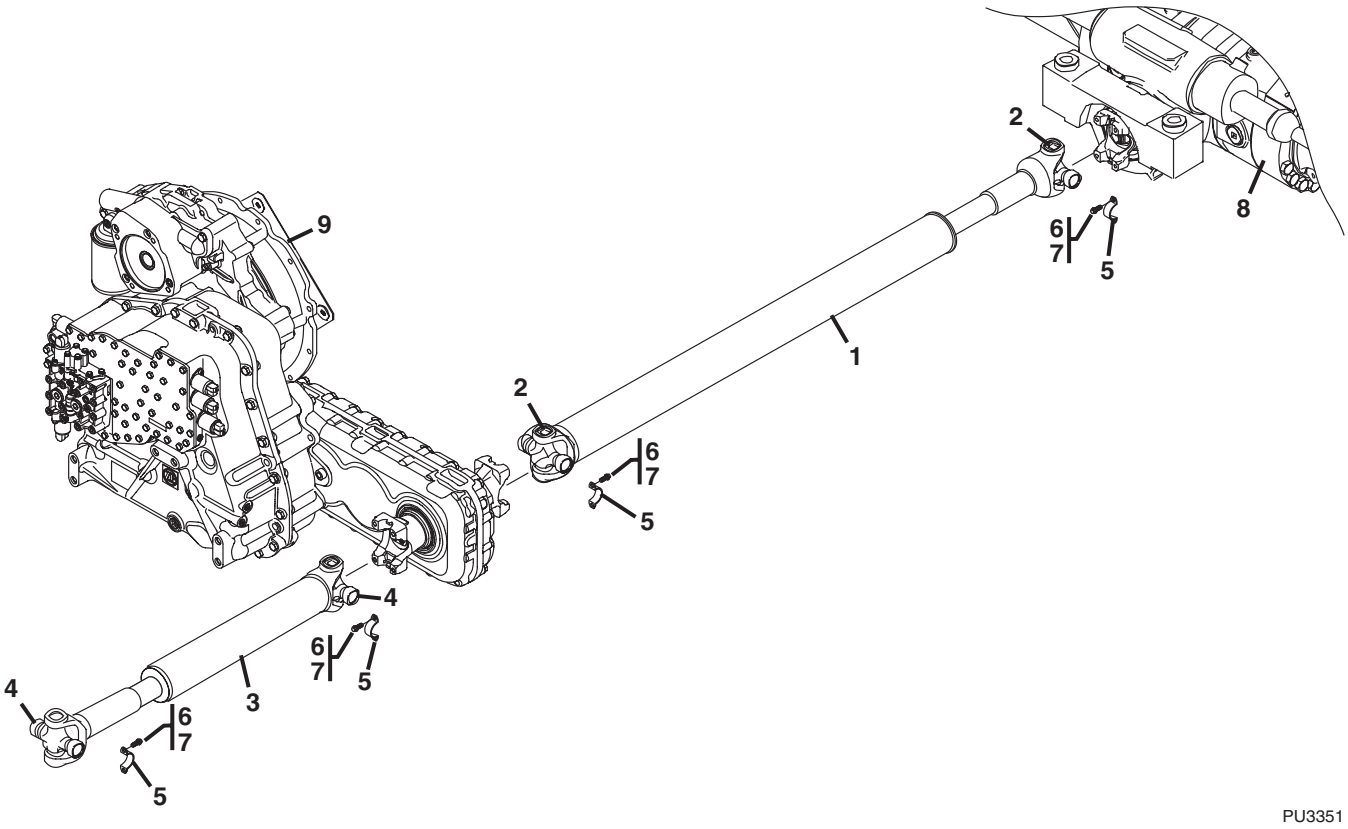

Figure 5-31 Drive Shafts

Item	Part Number	Qty.	Description	Rev.
1	7139913	1	REAR DRIVESHAFT, (includes item 2)	
2	8036433	2	CROSS & BEARING KIT	
3	7139914	1	FRONT DRIVESHAFT, (includes item 4)	
4	8036433	2	CROSS & BEARING KIT	
5		4	STRAP, (order kit 8880218-OM)	
6			SCREW, (torque to 32-42 lb-ft), (must replace when removed, do not re-torque), (order kit 8880218-OM)	
7	8526007	A/R	LOCTITE, #242, (apply to item 6)	
8		Ref	REAR AXLE, (see Figure 5-10 for details)	
9		Ref	TRANSMISSION, (see Figure 5-18 for details)	
	8880218-OM	1	STRAP KIT, (includes qty. 2 of item 5 & qty. 4 of item 6)	

Figure 5-32 Tire & Rims

644E

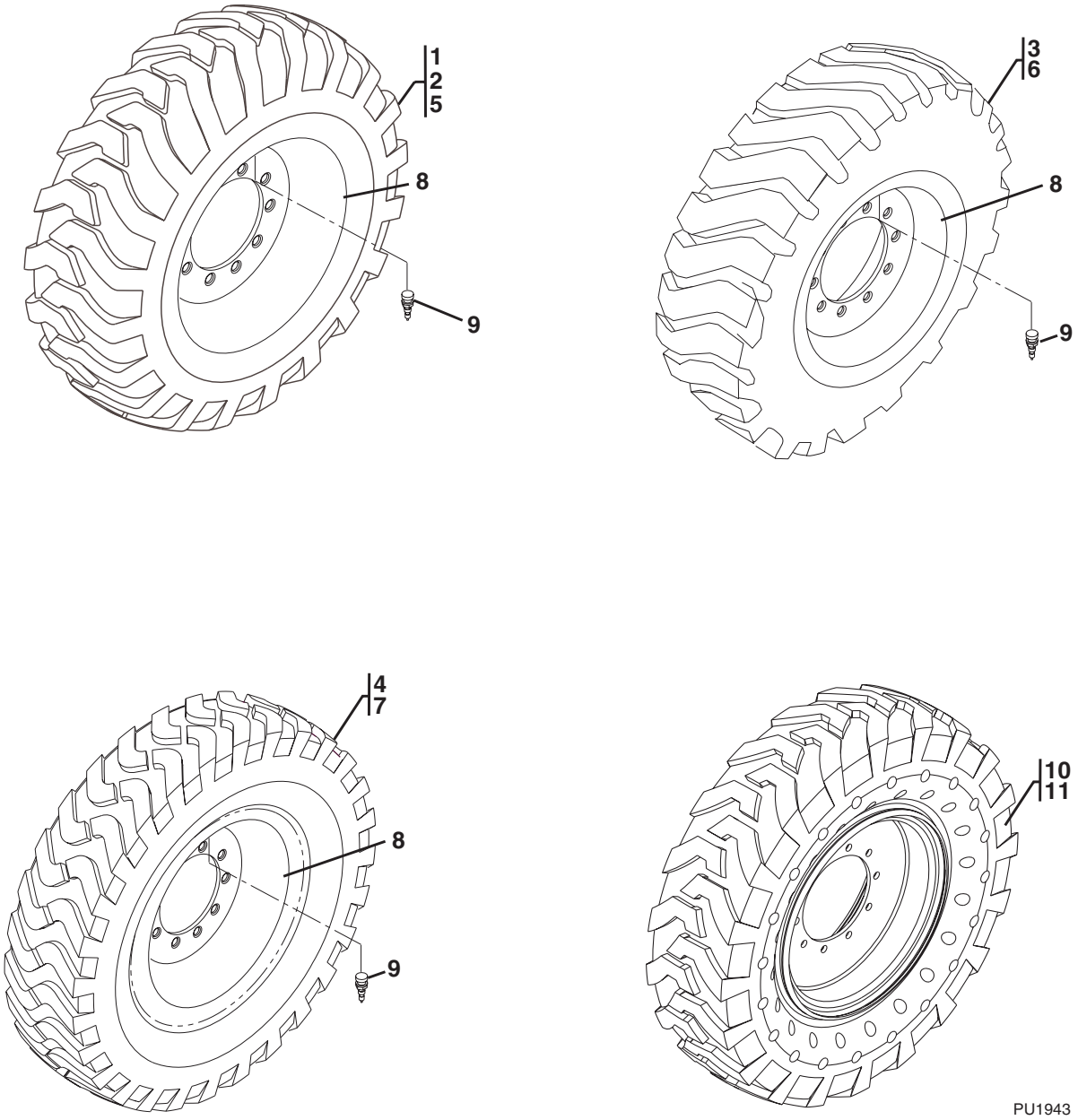

Figure 5-32 Tire & Rims

Item	Part Number	Qty.	Description	Rev.
	7139605	2	GRADER PNEUMATIC TIRE & WHEEL ASSY, (right side) - 13.00-24,12 PLY, G-2, (includes items 5, 8 & 9)	E
	7139606	2	GRADER PNEUMATIC TIRE & WHEEL ASSY, (left side) - 13.00-24,12 PLY, G-2, (includes items 5, 8 & 9)	E
	4520405	4	ROCK PNEUMATIC TIRE & WHEEL ASSY, 13.00-24,12 PLY, G-3, (includes items 6, 8 & 9)	A
	7300704	4	RADIAL PNEUMATIC TIRE & WHEEL ASSY 13.00-24, 12 PLY, (includes items 7, 8 & 9)	D
		Ref	**Note: Assemblies may require ballast/foam filling to manufacturer's specifications prior to installing on a machine. Refer to Operation & Safety or Service & Maintenance Manuals. Purchase individual tire and/or rim only if able to foam fill tire & wheel assembly, otherwise, purchase complete assembly.**	
1	7139739	2	GRADER FOAM FILLED TIRE & WHEEL ASSY, (right side) - 13.00-24, 12 PLY, (complete only)	C
2	7139740	2	GRADER FOAM FILLED TIRE & WHEEL ASSY, (left side) - 13.00-24, 12 PLY, (complete only)	C
3	7301845	4	ROCK FOAM FILLED TIRE & WHEEL ASSY, 13.00-24, 12 PLY, (complete only)	B
4	4520407	4	RADIAL FOAM FILLED TIRE & WHEEL ASSY, 13.00-24, 12 PLY, (complete only)	A
5	8780031	1	GRADER TIRE, 13.00-24 TG 12 PLY, G-2	
6	8780045	1	ROCK TREAD TIRE, 13.00-24, 12 PLY	
7	8780264	1	STEEL BELTED RADIAL TIRE, 13R24	
8	7301055	1	RIM, 9X24, 1.06 OFFSET, 9mm THICK	
9	8786514	1	VALVE STEM	
10	4520652	1	R.H. SOLID TIRE & WHEEL ASSY	B
11	4520653	1	L.H. SOLID TIRE & WHEEL ASSY	B

Figure 5-32 Tire & Rims

644E

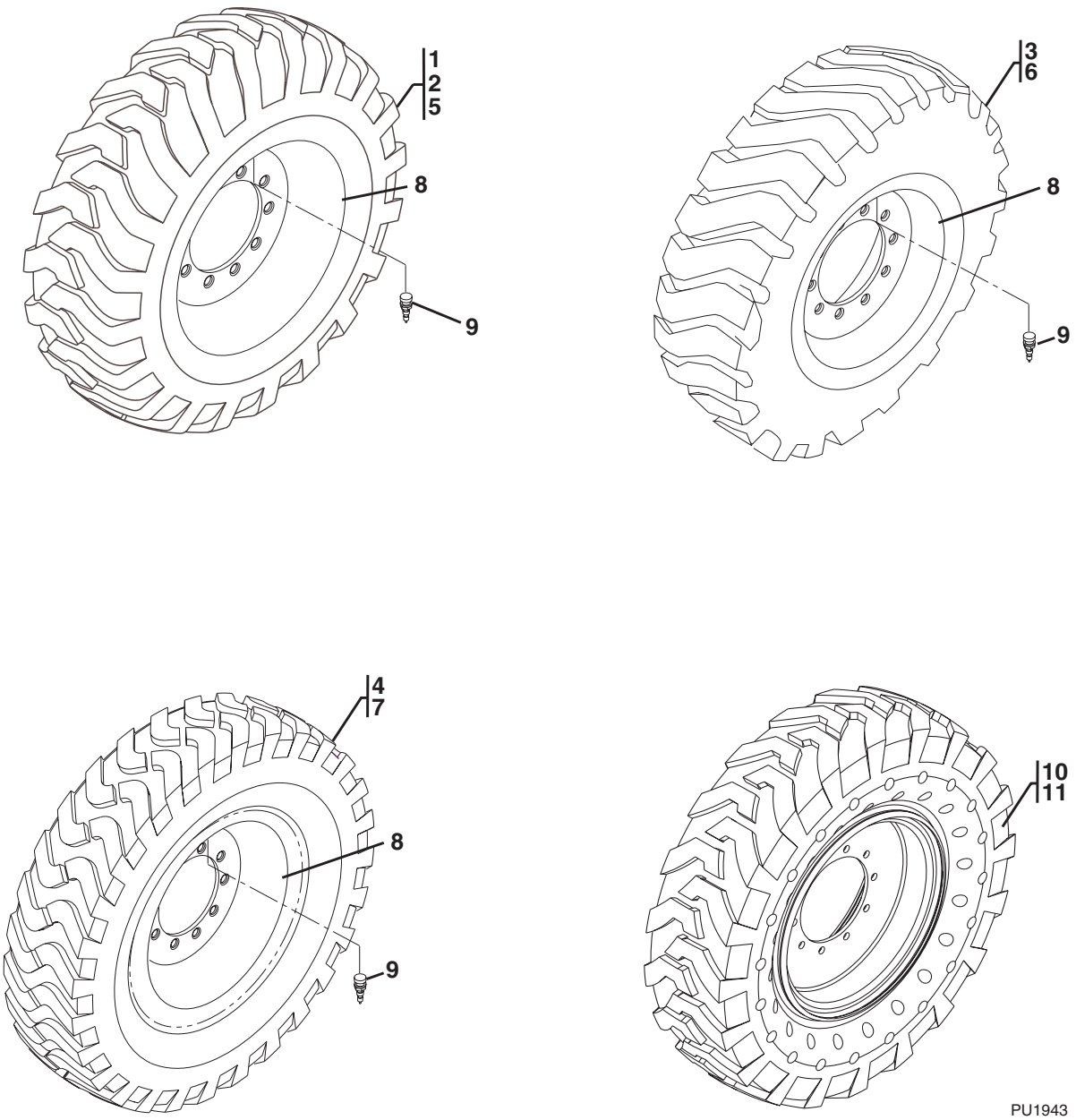

Figure 5-32 Tire & Rims

Item	Part Number	Qty.	Description	Rev.
	7138658	2	GRADER PNEUMATIC TIRE & WHEEL ASSY, (right side) - 13.00-24,12 PLY, G-2, (includes items 5, 8 & 9)	D
	7138659	2	GRADER PNEUMATIC TIRE & WHEEL ASSY, (left side) - 13.00-24,12 PLY, G-2, (includes items 5, 8 & 9)	D
	7139168	4	ROCK PNEUMATIC TIRE & WHEEL ASSY, 13.00-24,12 PLY, G-3, (includes items 6, 8 & 9)	C
	4520412	4	RADIAL PNEUMATIC TIRE & WHEEL ASSY 13.00-24, 12 PLY, (includes items 7, 8 & 9)	A
	4520648	4	TIRE SET, 13.00-24, SOLID, (includes items 10 & 11)	A
		Ref	**Note: Assemblies may require ballast/foam filling to manufacturer's specifications prior to installing on a machine. Refer to Operation & Safety or Service & Maintenance Manuals. Purchase individual tire and/or rim only if able to foam fill tire & wheel assembly, otherwise, purchase complete assembly.**	
1	7139159	2	GRADER FOAM FILLED TIRE & WHEEL ASSY, (right side) - 13.00-24, 12 PLY, (includes items 5, 8 & 9)	D
2	7139160	2	GRADER FOAM FILLED TIRE & WHEEL ASSY, (left side) - 13.00-24, 12 PLY, (includes items 5, 8 & 9)	D
3	4520319	4	ROCK FOAM FILLED TIRE & WHEEL ASSY, 13.00-24, 12 PLY, (includes items 6, 8 & 9)	B
4	4520413	4	RADIAL FOAM FILLED TIRE & WHEEL ASSY, 13.00-24, 12 PLY, (includes items 7, 8 & 9)	A
5	8780031	1	GRADER TIRE, 13.00-24 TG 12 PLY, G-2	
6	8780045	1	ROCK TREAD TIRE, 13.00-24, 12 PLY	
7	8780264	1	STEEL BELTED RADIAL TIRE, 13R24	
8	7301054	1	RIM, 9X24, 1.06 OFFSET, 9mm THICK	
9	8786514	1	VALVE STEM	
10	4520649	1	R.H. SOLID TIRE & WHEEL ASSY	B
11	4520650	1	L.H. SOLID TIRE & WHEEL ASSY	B

Figure 5-32 Tire & Rims

944E

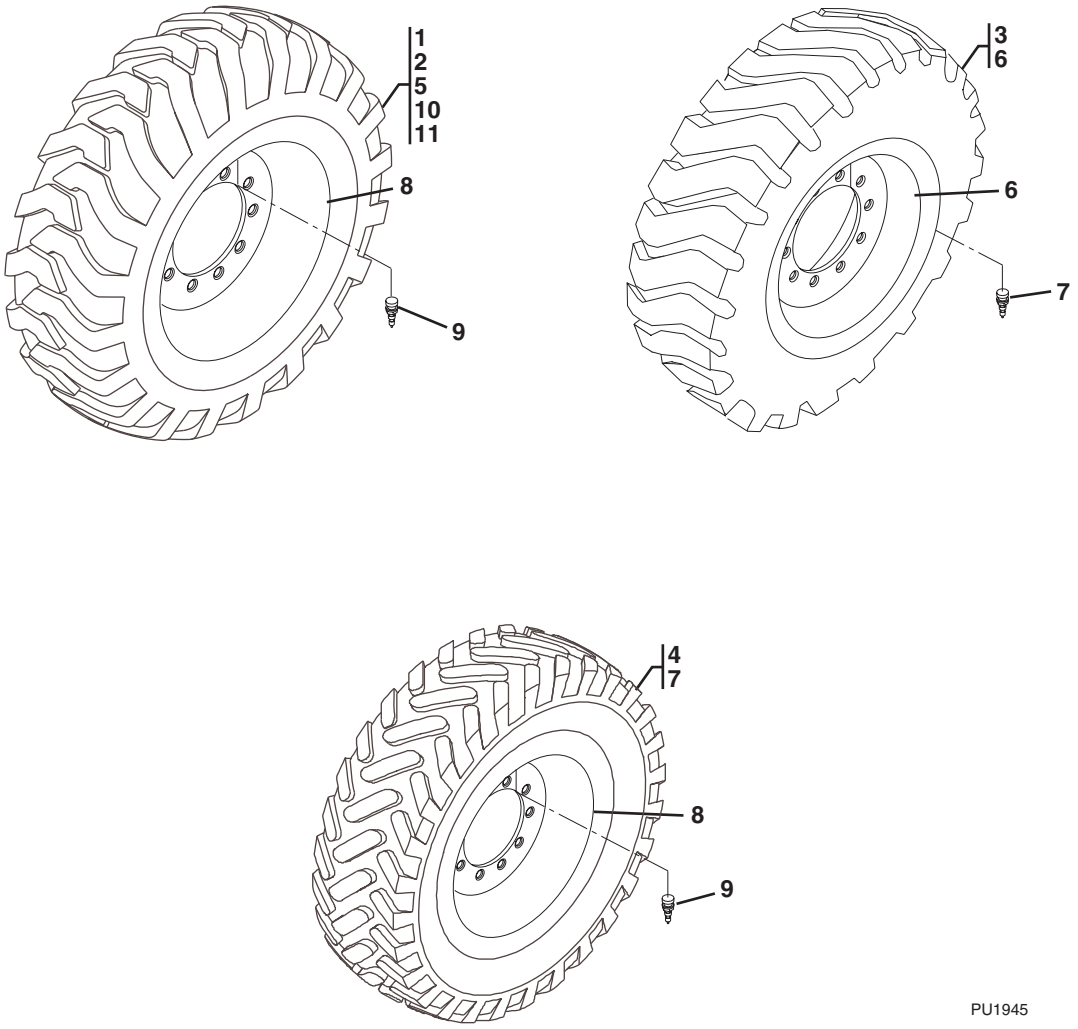

Figure 5-32 Tire & Rims

Item	Part Number	Qty.	Description	Rev.
	7138660	2	GRADER PNEUMATIC TIRE & WHEEL ASSY, (right side) - 15.5-25, 12 PLY, G-2, (includes items 5, 8 & 9)	
	7138661	2	GRADER PNEUMATIC TIRE & WHEEL ASSY, (left side) - 15.5-25,12 PLY, G-2, (includes items 5, 8 & 9)	
	4520466	4	ROCK TREAD PNEUMATIC TIRE & WHEEL ASSY 15.5-25, 12 PLY, (includes items 6, 8 & 9)	
	7139165	4	RADIAL PNEUMATIC TIRE & WHEEL ASSY, 15.5R25, VUT 2 STAR, L-2, (includes items 7 thru 9)	
	1001105703	4	TIRE SET, 14X24, SOLID, (includes items 10 & 11)	A
		Ref	**Note: Assemblies may require ballast/foam filling to manufacturer's specifications prior to installing on a machine. Refer to Operation & Safety or Service & Maintenance Manuals. Purchase individual tire and/or rim only if able to foam fill tire & wheel assembly, otherwise, purchase complete assembly.**	
1	7139161	2	GRADER FOAM FILLED TIRE & WHEEL ASSY, (right side) - 15.5-25, 12 PLY, (complete only)	
2	7139162	2	GRADER FOAM FILLED TIRE & WHEEL ASSY, (left side) - 15.5-25, 12 PLY, (complete only)	
3	4520467	4	ROCK FOAM FILLED TIRE & WHEEL ASSY - 15.5-25, 12 PLY, (complete only)	
4	4520469	4	RADIAL FOAM FILLED TIRE & WHEEL ASSY - 15.5-25, 12 PLY, (complete only)	
5	8780036	1	GRADER TIRE, 15.5-25 TG 12 PLY, L-2	
6	8780050	1	ROCK TREAD TIRE, 15.5-25, 12 PLY,	
7	8780048	1	RADIAL TIRE, 15.5R25, VUT 2 L-2	
8	7301056	1	RIM, 13X25, 1.18 OFFSET, 5/16 THICK	
9	8786514	1	VALVE STEM	
10	1001105705	2	RH TIRE & WHEEL ASSY, 14-24, SOLID	
11	1001105704	2	LH TIRE & WHEEL ASSY, 14-24, SOLID	

This Page Intentionally Left Blank

SECTION 6
CAB

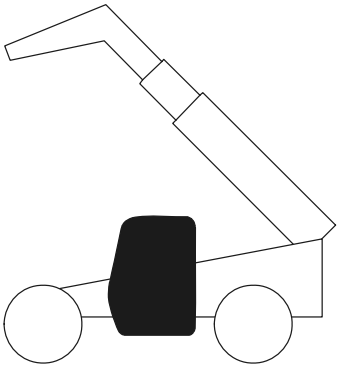

Figure 6-1 Cab Assembly

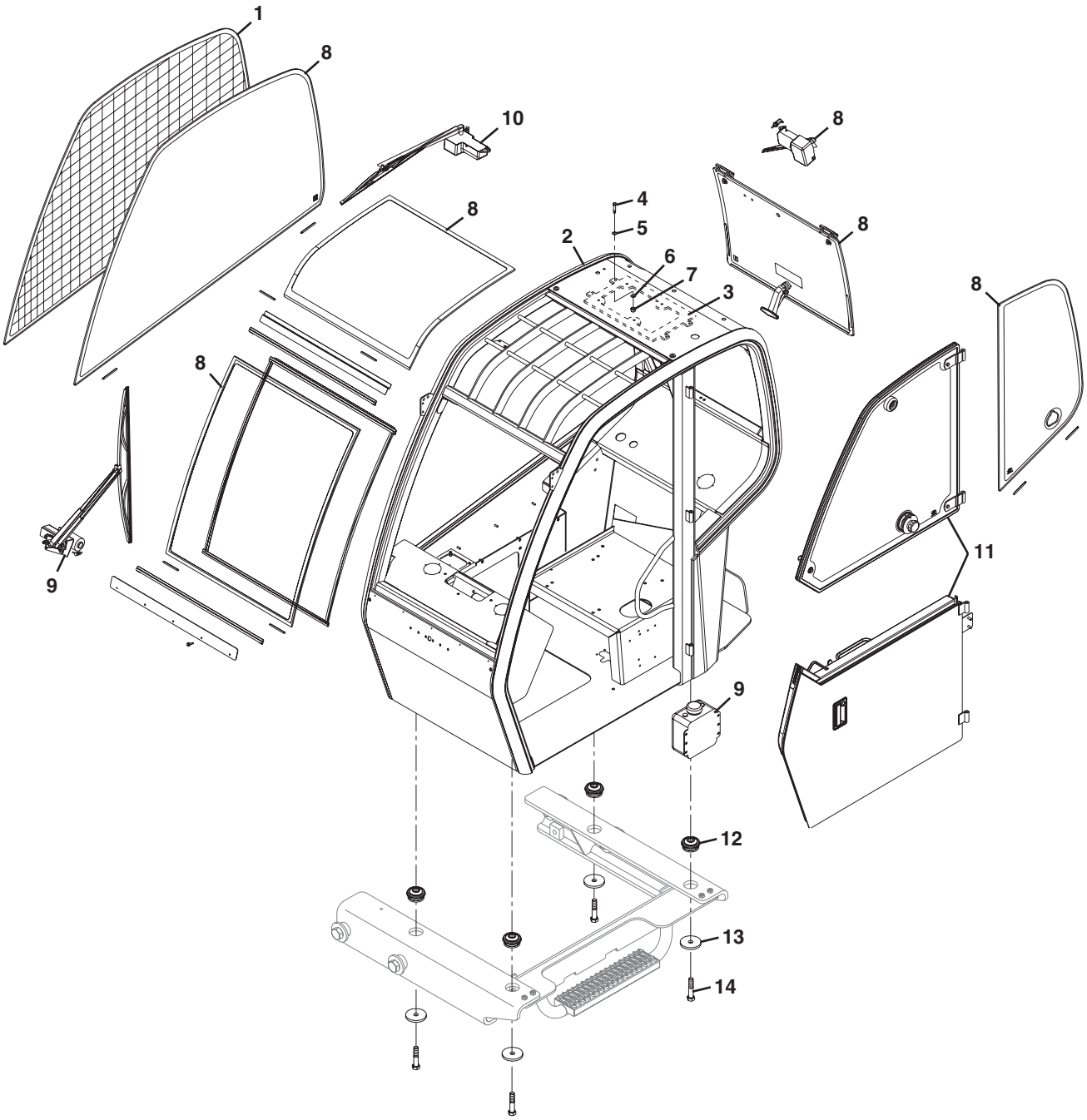

Figure 6-1 Cab Assembly

Item	Part Number	Qty.	Description	Rev.
	7151241	1	OPEN CAB ASSY, (includes items 1 & 2)	
	7151242	1	ENCLOSED CAB ASSY, (includes items 2 thru 11)	
1	7151317	1	WINDOW MESH	
2	7151279	1	CAB WELDMENT, (includes items 3 thru 7)	
3	4341074	1	MANUAL BOX SUPPORT MOUNT	
4	0641406	4	HEX HD CAPSCREW, 1/4-20X3/4	
5	8866266	4	WEATHER TIGHT WASHER, 1/4	
6	4751400	4	FLAT WASHER, 1/4	
7	8305624	4	HEX LOCKNUT, 1/4-20	
8		Ref	CAB GLASS ASSY, (see Figure 6-3 for details)	
9		Ref	FRONT WINDSHEILD WIPER ASSY, (see Figure 6-8 for details)	
10		Ref	SKYLIGHT WIPER ASSY, (see Figure 6-9 for details)	
11		Ref	DOOR ASSY, (see Figure 6-4 for details)	
12	8278041	4	CAB ISOLATOR	
13	7129441	4	REBOUND WASHER	
14	8310375	4	HEX HD CAPSCREW, 3/4-10X3-3/4, GR8	

Figure 6-2 Soft Cab Enclosure

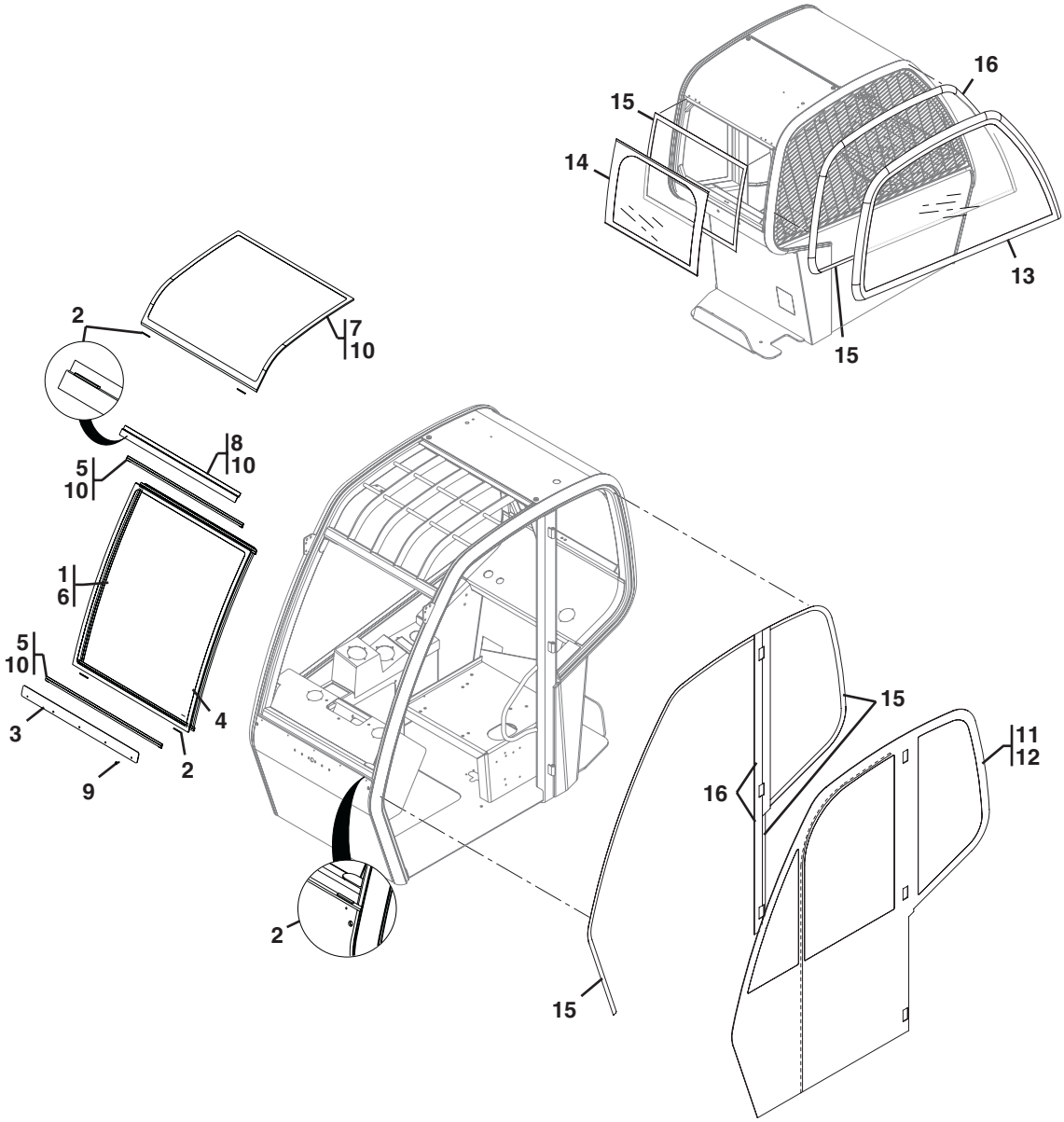

PU2331

Figure 6-2 Soft Cab Enclosure

Item	Part Number	Qty.	Description	Rev.
	7151276	1	SOFT CAB ENCLOSURE KIT, (includes all items)	AA
1	7301730	1	SOFT CAB GLASS KIT, (includes items 2 thru 10)	AB
2	8035490	4	SETTING BLOCK, 1/8X1/4X2	
3	8036658	1	WINDSHIELD RETAINER, (lower)	
4	8036659	1	WINDSHIELD SEAL, DOUBLE D	
5	8036660	2	WINDSHIELD SEAL, COMPRESSION D	
6	8036663	1	WINDSHIELD GLASS	
7	8036666	1	SKYLIGHT GLASS	
8	8036667	1	WINDSHIELD RETAINER, (upper)	
9	8037204	5	SELF TAPPING SCREW, #10-16X3/4	
10	8035523	AR	BLACK URETHANE SEALANT, (apply to items 4, 5 & 7)	
11	7301731	1	SOFT CAB VINYL KIT, (includes items 12 thru 16)	AB
12	8036720	1	L.H. VINYL ENCLOSURE, (includes items 15 & 16)	
13	8036721	1	R.H. VINYL ENCLOSURE, (includes items 15 & 16)	
14	8036722	1	REAR VINYL ENCLOSURE, (includes item 15)	
15	8036534	AR	SELF ADHESIVE VELCRO, HOOK STRIP, 1 WIDE, (order by linear foot)	
16	8036535	AR	SELF ADHESIVE VELCRO, HOOK STRIP, 2 WIDE, (order by linear foot)	

Figure 6-3 Cab Glass

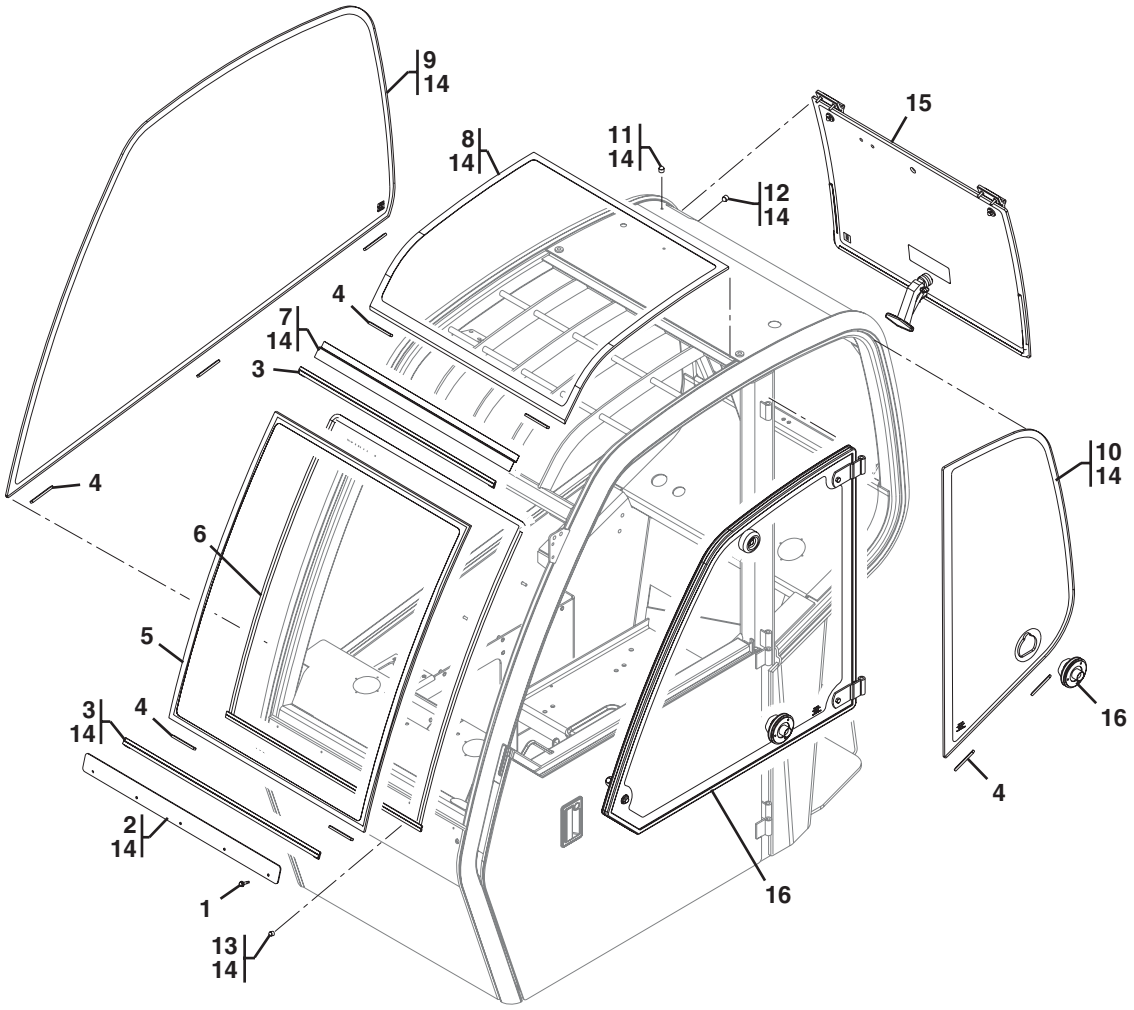

PU2340

Figure 6-3 Cab Glass

Item	Part Number	Qty.	Description	Rev.
	7301670	1	CAB GLASS ASSY, (includes items 1 thru 15)	
1	8037204	5	SELF TAPPING SCREW, #10-16X3/4	
2	8036658	1	LOWER WINDSHIELD RETAINER	
3	8036660	1	COMPRESSION D WINDSHIELD SEAL	
4	8035490	9	SETTING BLOCK, 1/8X1/4X2	
5	8036663	1	WINDSHIELD GLASS	
6	8036659	1	DOUBLE D WINDSHIELD SEAL	
7	8036667	1	UPPER WINDSHIELD RETAINER	
8	8036666	1	SKYLIGHT GLASS	
9	8036665	1	RIGHT SIDE GLASS	
10	8036664	1	LEFT SIDE GLASS	
11	8035640	3	HOLE PLUG, .375 DIA BLACK	
12	8036655	2	CAP PLUG, .236 DIA RED	
13	8036654	2	ROUND PUSH IN PLUG, .315DIA	
14	8035523	AR	BLACK URETHANE SEALANT, (apply to items 2, 3 & 7 thru 13)	
15		Ref	REAR WINDOW ASSY, (see Figure 6-7 for details)	
16		Ref	DOOR GLASS, (see Figure 6-4 for details)	

Figure 6-4 Door Assembly

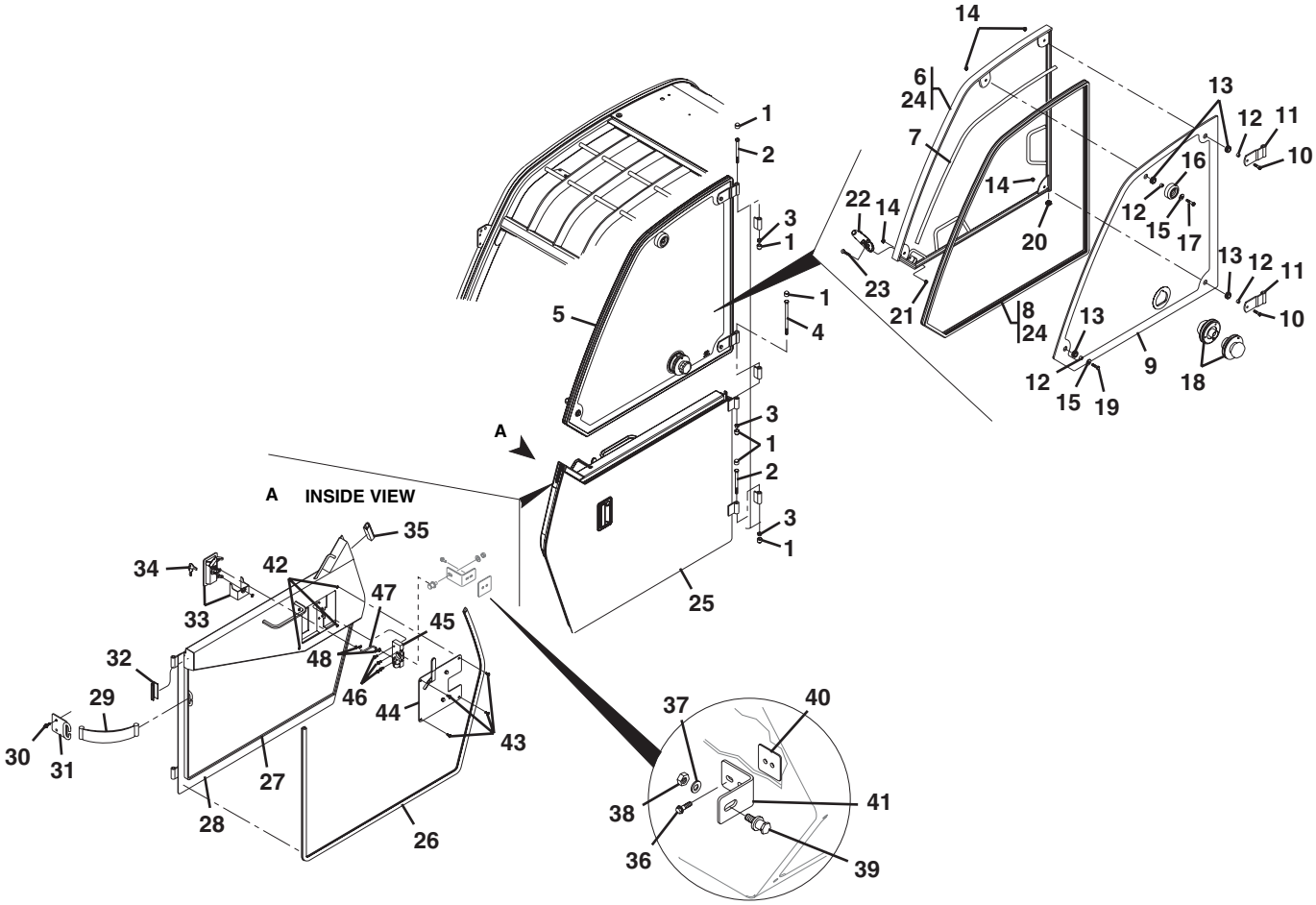

PU2351

Figure 6-4 Door Assembly

Item	Part Number	Qty.	Description	Rev.
	7301671	1	DOOR ASSY, (includes all items)	
1	8036065	6	HEX DOME CAP, 3/8 BLACK NYLON	
2	8035631	2	HEX HD CAPSCREW, 3/8-16X4-1/2	
3	8035632	3	HEX NUT, 3/8-16	
4	8036064	1	HEX HD CAPSCREW, 3/8-16X6-1/2, GR5	
5	7301811	1	UPPER DOOR ASSY, (includes items 6 thru 24)	
6		1	UPPER DOOR WELDMENT	
7	8036711	1	DOOR GLASS BULB SEAL	
8	8036707	1	UPPER DOOR BULB SEAL	
9	8036706	1	UPPER DOOR GLASS	
10	8036700	2	HEX HD CAPSCREW, 5/16-18X1-1/4, GR8	
11	8036710	2	HINGE PIN, 3/8	
12	8036709	4	SPACER BUSHING	
13	8035477	4	RUBBER GROMMET, .50, .812, 1.062, .25	
14	8036701	4	HEX NUT, 5/16-18, GR8	
15	8036699	2	FLAT WASHER, .375, .875, .075	
16	8036703	1	BUMPER, RUBBER	
17	8303715	1	HEX HD CAPSCREW, 5/16-18X1-1/2, GR5	
18	8036705	1	DOOR HOLD OPEN	
19	8035445	1	HEX HD CAPSCREW, 5/16-18X1, GR8	
20	8036704	1	SQUARE PLUG	
21	8036702	1	HEX NUT, 1/4-20, GR8	
22	8036712	1	UPPER DOOR LATCH ASSY	
23	8310136	1	TRUSS SCREW, 1/4-20X1-1/4	
24	8035523	AR	BLACK URETHANE SEALANT, (apply to items 6 & 8)	
25	7301812	1	LOWER DOOR ASSY, (includes items 26 thru 47)	
26	8036692	1	LOWER DOOR BULB SEAL	
27	8036690	1	LOWER DOOR FOAM	
28		1	LOWER DOOR WELDMENT	
29	8036688	1	DOOR RESTRAINT STRAP	
30	8036684	2	FLANGE BOLT, M8-1.25X20mm	
31	8036689	1	RESTRAINT WELDMENT, DOOR	
32	8036693	1	LOWER DOOR REAR FILLER BULB SEAL	
33	8035441	1	PADDLE LATCH	
34	8342808	2	DOOR KEYS	
35	8036691	1	LOWER DOOR FRONT FILLER BULB SEAL	
36	8036696	2	FLANGE BOLT, 1/4-20X3/4	
37	8036061	1	FLAT WASHER, .531, 1.063, .094	
38	8035639	1	HEX LOCKNUT, 7/16-14	
39	8035637	1	STRIKER BOLT, 7/16-14X1-1/2	
40	8036059	1	PLATE WELDMENT STRIKER NUT	
41	8036687	1	DOOR STRIKER MOUNT	
42	8036685	4	RIVET NUT, M6X1.0	
43	8036656	4	PHILLIPS PAN HEAD BOLT, M6-1.0X16mm	
44	8036695	1	LOWER DOOR COVER ASSY	
45	8035439	1	DOOR LATCH	
46	91344043	4	TRUSS SCREW, 1/4-20X5/8, GR5	
47	8036694	1	EXTERIOR LATCH LINKAGE	
48	80384187	2	ROD END RETAINER CLIP	

Figure 6-5 Operator's Compartment - Inner Panels

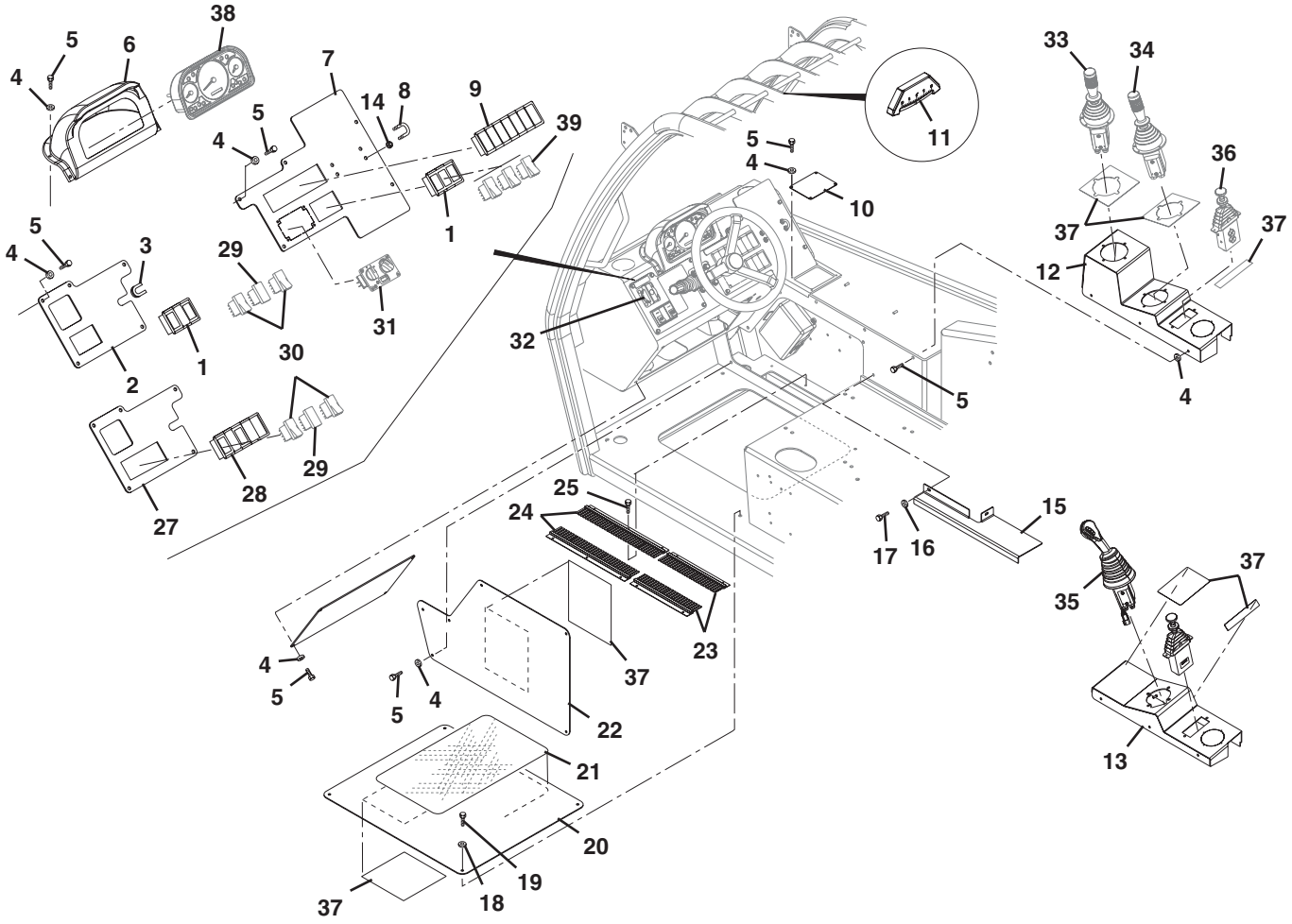

PU2361

Figure 6-5 Operator's Compartment - Inner Panels

Item	Part Number	Qty.	Description	Rev.
1	8223074	2	3 POSITION SWITCH BEZEL, **(644E S/N 17569-20115 & S/N 0160002519 thru 0160007267, excluding 0160006857), (944E S/N 18554 thru 20123 & 0160002514 thru 0160007270, excluding 0160005664)**	
2	7151250	1	LEFT DASH PANEL, **(644E S/N 17569 thru 20115 & 0160002519 thru 0160007267, excluding 0160006857), (944E S/N 18554 thru 20123 & 0160002514 thru 0160007270, excluding 0160005664)**	
3	10725268	1	LOOM, 1/4 O.D.	
4	8307219	31	PLAIN WASHER, M6	
5	8303544	32	HEX HD CAPSCREW, M6-1.0X20mm, PC8.8	
6	7151262	1	DASH COVER MOULDING	
7	7151337	1	RIGHT DASH PANEL	
8	1001102844	2	U-BOLT, 1/4-20 1-1/4	
9	8223075	1	7 POSITION SWITCH BEZEL	
10	7151313	1	BLANKING PLATE, (early production only)	
11	8466306	1	TILT ANGLE GAUGE	
12	7151273	1	MULTIPLE JOYSTICK PANEL	
13	7301762	1	SINGLE JOYSTICK PANEL	
14	8310382	8	FLANGE NUT	
15	7151280	1	SEAT MOUNTING PANEL	
16	8307221	2	PLAIN WASHER, M10	
17	8303798	2	HEX HD CAPSCREW, M10-1.5X25mm, PC8.8	
18	8307222	4	PLAIN WASHER, M8	
19	8303783	4	HEX HD CAPSCREW, M8-1.25X25mm, PC8.8	
20	7151271	1	FLOOR ACCESS PANEL	
21	10139087	1	ANTI-SLIP-ADHESIVE MAT	
22	7151272	1	FUSE & RELAY ACCESS PANEL	
23	7301279	2	SHORT BRUSH STRIP	
24	7138944	2	BRUSH STRIP	
25	8303607	10	HEX HD CAPSCREW, M6-1.0X25mm, PC8.8	
26	7151251	1	LOWER DASH PANEL	
27	3380542	1	LEFT DASH PANEL, **(644E S/N 0160007291 & After, including 0160006857), (944E S/N 0160007289 & After, including 0160005664)**	
28	4360569	1	5 POSITION BEZEL, **(644E S/N 0160007291 & After, including 0160006857), (944E S/N 0160007289 & After, including 0160005664)**	
29		Ref	ECM INDICATOR SWITCH, (see Figure 7-2 for details)	
30		Ref	PARK BRAKE & TRANSMISSION DISCONNECT, (see Figure 10-3 for details)	
31		Ref	HEATER CONTROL PANEL, (see Figure 10-4 for details)	
32		Ref	STEER SELECT VALVE, (see Figure 8-8 for details)	
33		Ref	FRONT JOYSTICK CONTROL VALVE, (see Figure 7-5 for details)	
34		Ref	REAR JOYSTICK CONTROL VALVE, (see Figure 7-5 for details)	
35		Ref	SINGLE JOYSTICK CONTROL VALVE, (see Figure 7-6 for details)	
36		Ref	FRAME/SWAY CONTROL VALVE, (see Figure 7-4 for details)	
37		Ref	JOYSTICK DECALS, (see Figure 11-1 for details)	
38		Ref	DASH PANEL, (see Figure 10-3 for details)	
39		Ref	WIPER SWITCHES, (see Figure 10-4 for details)	

Figure 6-6 Operator's Seat

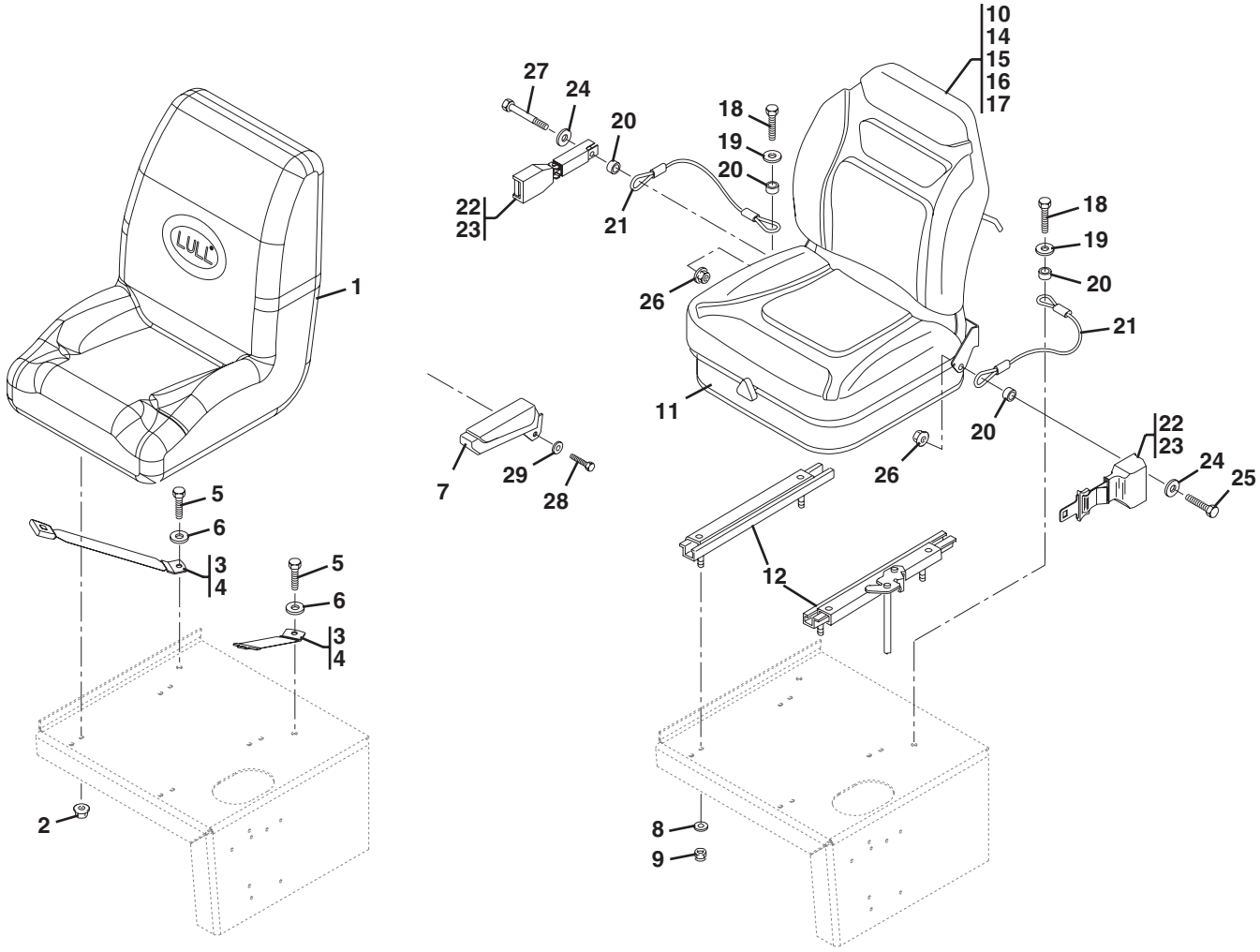

Figure 6-6 Operator's Seat

Item	Part Number	Qty.	Description	Rev.
1		1	STANDARD SEAT ASSY, (no longer available, order seat replacement kit p/n 2915056. for service kit parts see Figure 6-6 644E S/N 0160013127 & After, 944E S/N 0160013131 & After)	
2	10705107	4	HEX NUT, FLANGE 5/16-18	
3	10239367	1	SEAT BELT, 2	
4	10725464	1	SEAT BELT, 3 (optional)	
5	10700303	2	HEX HD CAPSCREW, 7/16-14X1-1/4, GR5	
6	10701253	2	FLAT WASHER, 7/16	
7	7138858	1	ARM REST	
8	8307106	4	PLAIN WASHER, 5/16	
9	8305626	4	HEX LOCKNUT, 5/16-18	
10		1	OPTIONAL SEAT ASSY, (no longer available, order seat replacement kit on Figure 6-6 644E S/N 0160013127 & After, 944E S/N 0160013131 & After)	
11	8036009	1	BOOT, 60/76mm, (covers adjuster below seat)	
12	8036010	1	ADJUSTER, 6"	
13	8036626	1	CUSHION/PAN ASSY, (includes both seats & back rests)	
14	8036011	1	DAMPER, (shock absorber)	
15	8036013	4	UP STOP BUMPER/DOWN STOP BUMPER ROLLERS - 7/16 DIA	
16	8036014	1	SPRINGS & CABLE	
17	8036015	1	HANGER/KNOB/TENSION SHAFT KIT	
18	8303674	2	HEX HD CAPSCREW, 7/16-14X1-1/2, GR5	
19	8307205	2	PLAIN WASHER, 7/16	
20	7096491	4	SPACER	
21	7138883	2	SEAT BELT TETHER	
22	8864057	1	SEAT BELT, 2 RETRACTABLE, (includes items 24 thru 27)	
23	8864058	1	SEAT BELT, 3 RETRACTABLE, (optional), (includes items 24 thru 27)	
24		2	PLAIN WASHER, 7/16	
25		1	HEX HD CAPSCREW, 7/16-20X1-1/2, GR5	
26		2	FLANGED HEX NUT, 7/16-20	
27		1	HEX HD CAPSCREW, 7/16-20X2-1/2, GR5	
28	8303783	2	HEX HD CAPSCREW, M8X1.25X25mm, PC8.8	
29	8307203	2	PLAIN WASHER	

Figure 6-6 Operator's Seat

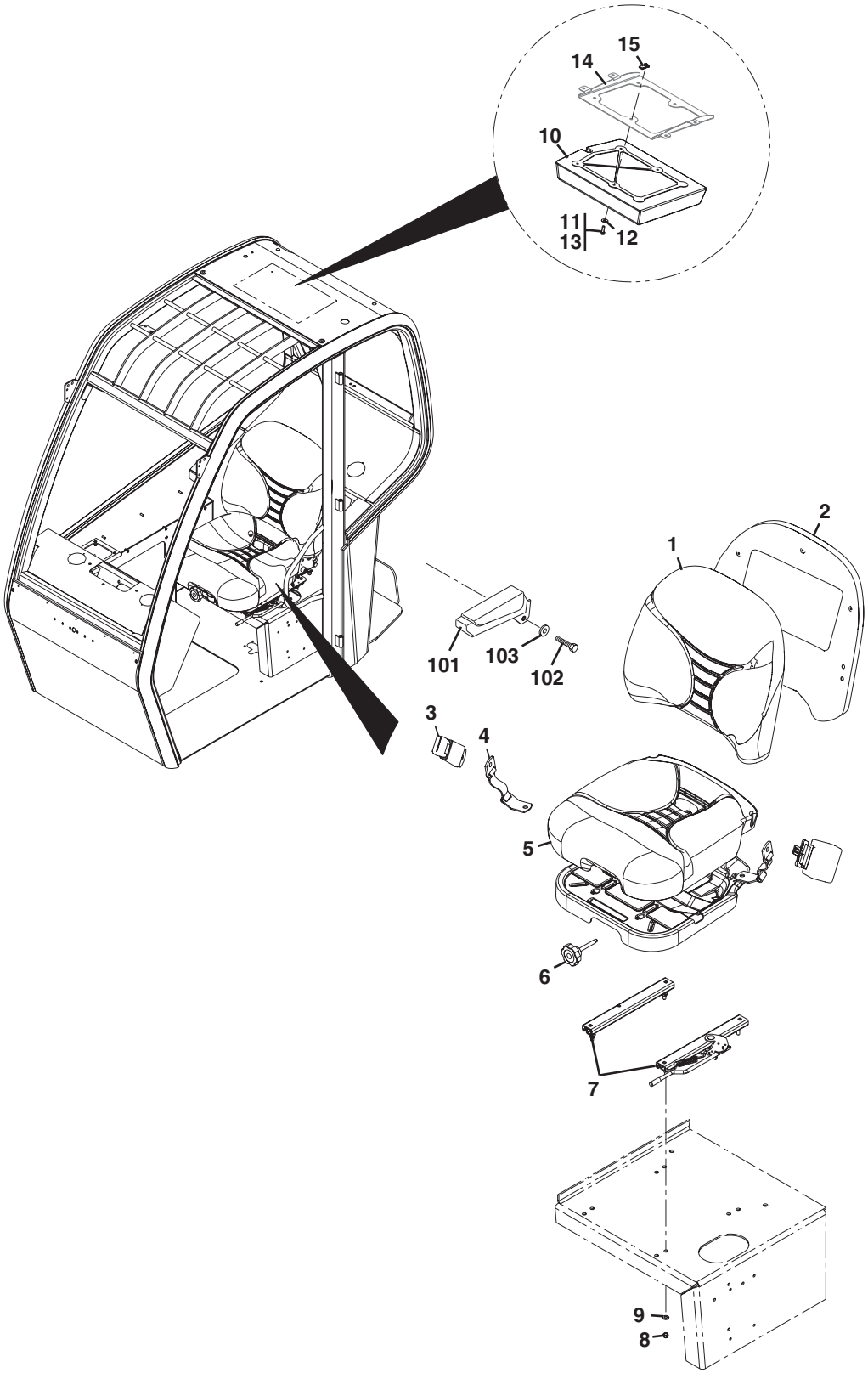

Figure 6-6 Operator's Seat

Item	Part Number	Qty.	Description	Rev.
	3980039	1	SUSPENSION SEAT, (includes items 1 thru 7), **(644E S/N 0160013127 thru 0160034233), (944E S/N 0160013131 thru 0160034227)**	
	1001101085	1	SUSPENSION SEAT, (includes items 1 thru 7), **(644E S/N 0160034234 & After), (944E S/N 0160034228 & After)**	
1	7026900	1	BACK CUSHION KIT	
2	7026902	1	BACK PANEL KIT	
3	7026905	1	SEAT BELT KIT	
	91563164	1	SEAT BELT, 3IN (**California Only**), not included with seat	
4	7026906	1	TETHER KIT	
5	7026901	1	SEAT CUSHION KIT	
6	7026799	1	KNOB KIT	
7	7026798	1	SLIDE KIT	
8	8305626	4	HEX LOCKNUT, 5/16-18	
9	8307106	4	PLAIN WASHER, .312	
10	0860520	1	MANUAL STORAGE BOX	
11	0641406	8	HEX HD CAPSCREW, 1/4-20X3/4	
12	4751400	8	FLAT WASHER, 1/4	
13	0100011	AR	LOCTITE, #242	
14		Ref	MANUAL BOX MOUNT & HARDWARE, (see Figure 6-1 for details)	
15	8310702	4	NUT RETAINER, 1/4-20	
101	7138858	1	ARM REST	
102	8303783	2	HEX HD CAPSCREW, m8X1.25X25mm, PC8.8	
103	8307203	2	PLAIN WASHER, 5/16	
	2915056	1	SUSPENSION SEAT REPLACEMENT KIT, (includes seat p/n 3980039 & items 8 thru 15)	
			NOTE: ITEM NUMBERS NOT LISTED ARE NOT USED ON THIS FIGURE	

Figure 6-7 Rear Window

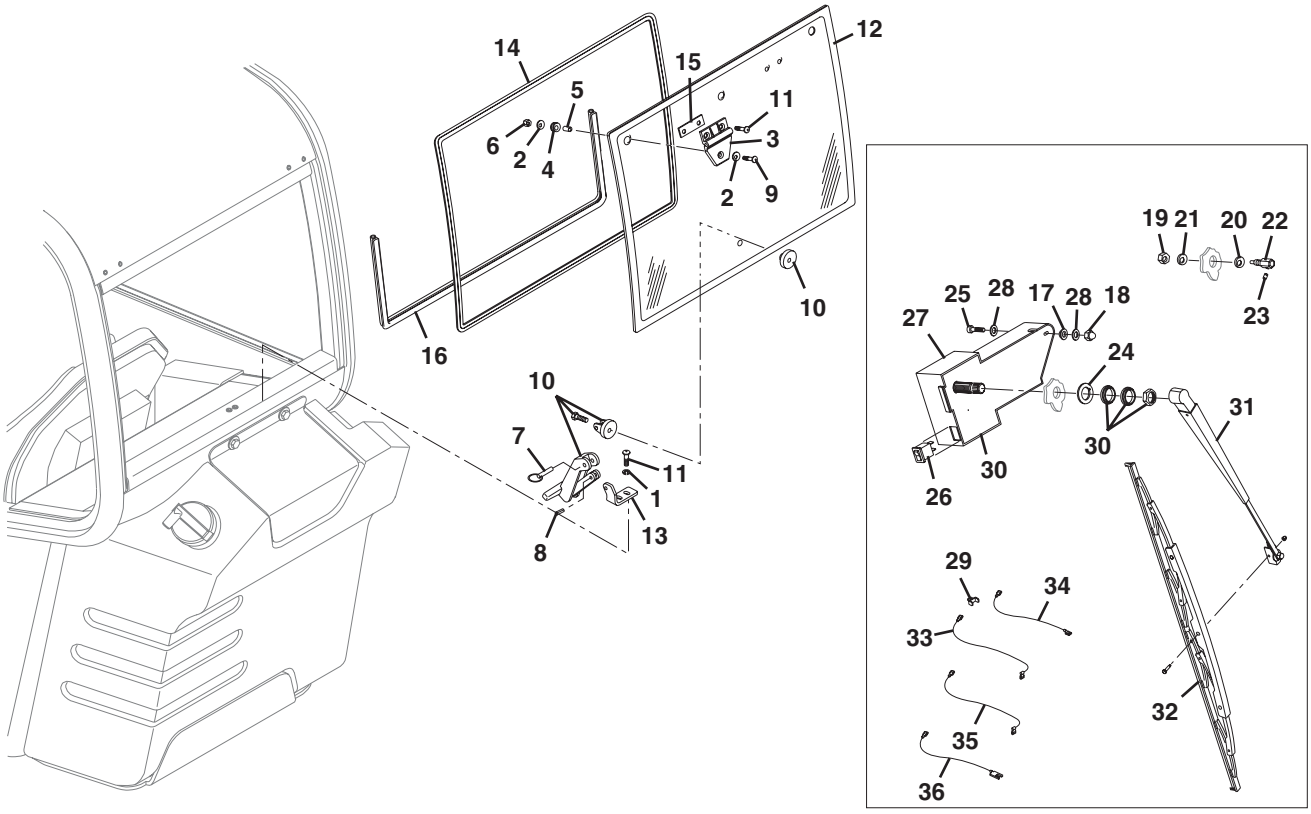

PU2380

Figure 6-7 Rear Window

Item	Part Number	Qty.	Description	Rev.
	7301747	1	REAR WINDOW ASSY, (includes items 1 thru 16)	
1	8035416	2	LOCKWASHER, 1/4	
2	80264082	4	FLAT WASHER, 9/32 IDX1.05 OD	
3	8035475	2	PLASTIC HINGE	
4	8035477	2	RUBBER GROMMET	
5	8035478	2	PLASTIC BUSHING	
6	8035479	2	ACORN NUT, 1/4-20	
7	1001109417	1	DETENT RING PIN	
8	8035486	1	ROLL PIN, 3/16X1/2	
9	8310136	2	TRUSS SCREW, HD 1/4-20X1-1/4	
10	1001081280	1	WINDOW LATCH	
11	8036673	6	PHILLIPS PAN BOLT, HD. M6-1.0X25mm	
12	8036674	1	REAR WINDOW GLASS	
13	8036675	1	REAR WINDOW LATCH MOUNT	
14	8036676	1	REAR WINDOW BULB SEAL	
15	8036672	2	HINGE SPACER	
16	8036734	1	REAR WINDOW SEAL, SINGLE “D”	
	6623864	1	REAR WINDOW WIPER ASSY, (includes items 17 thru 36)	
17	8034803	1	RUBBER GROMMET, “T” STYLE	
18	8034805	1	ACORN NUT, #10-24	
19	8034798	1	HEX NUT, 5/16-18	
20	8034804	1	WEATHER TIGHT WASHER	
21	8034800	1	FLAT WASHER, BLACK NYLON	
22	8034801	1	NOZZLE HOLDER	
23	8554008	1	SPRAY NOZZLE	
24	8034808	1	NYLON SPACER	
25	8034811	1	PHILLIPS PAN BOLT, HD #10-24X7/8	
26	8035509	1	ROCKER SPST SWITCH	
27	8035511	1	MOTOR COVER	
28	8036678	2	BLACK NYLON WASHER	
29	8036714	1	TERMINAL ADAPTER	
30	8035506	1	WIPER MOTOR	
31	8036716	1	WIPER ARM	
32	8036717	1	12" WIPER BLADE	
33	8036729	1	REAR WIPER POWER JUMPER WIRE	
34	8036718	1	REAR WIPER POWER JUMPER WIRE	
35	8036719	1	REAR WIPER SWITCH JUMPER WIRE	
36	8036761	1	WIPER GROUND JUMPER WIRE	

Figure 6-7 Rear Window

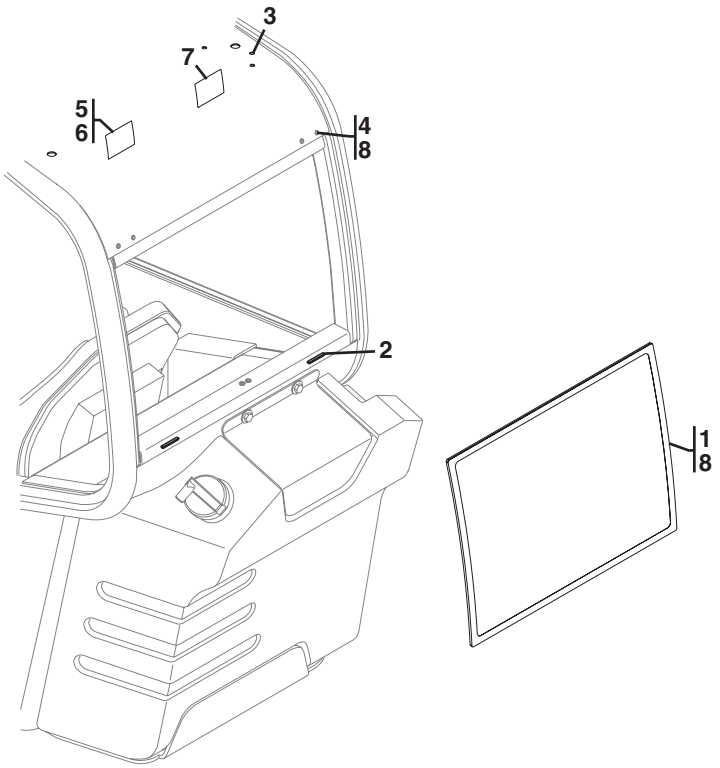

PU3320

Figure 6-7 Rear Window

Item	Part Number	Qty.	Description	Rev.
1	7028738	1	REAR WINDOW GLASS	
2	8035490	2	SETTING BLOCK	
3	8035640	3	PLUG, 3/8 DIA	
4	8036655	2	CAB PLUG	
5	91404298	3	RIVET	
6	91404301	1	HAMMER	
7		Ref	ESCAPE DECAL, (see Figure 11-1 for details)	
8	8035523	AR	BLACK URETHANE SEALANT, (apply to items 1 & 4)	

Figure 6-8 Front Windshield Wiper Assembly

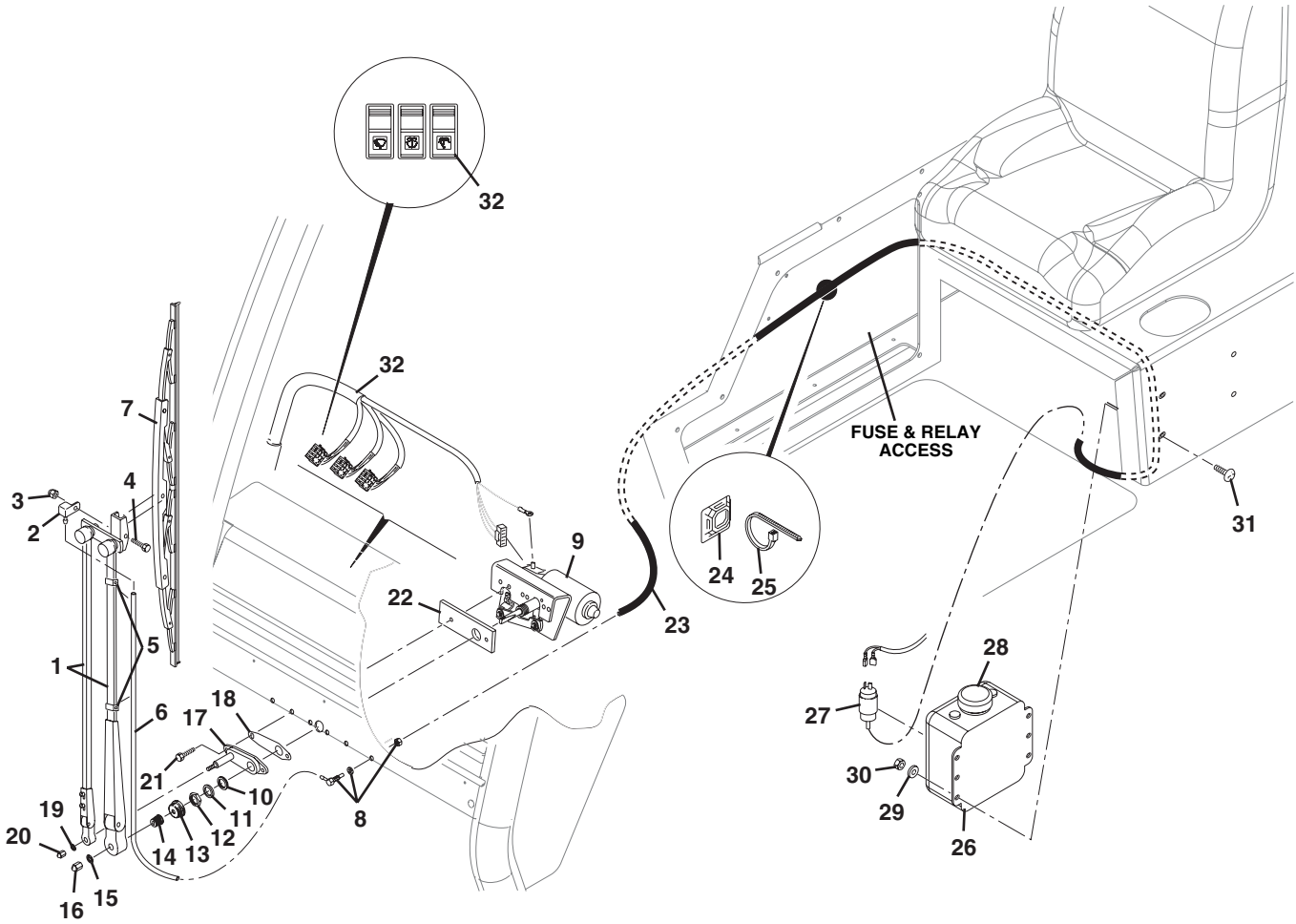

PU2390

Figure 6-8 Front Windshield Wiper Assembly

Item	Part Number	Qty.	Description	Rev.
	8036668	1	FRONT WINDSHIELD WIPER ASSY, (includes items 1 thru 22)	
1	8035393	1	WIPER ARM, 24" WET, (includes items 2 thru 6)	
2		1	SPRAYER NOZZLE	
3		1	LOCKNUT	
4		1	BOLT	
5		2	HOSE CLIPS	
6		1	HOSE	
7	8035392	1	WIPER FLEX BLADE, 28"	
8	1001081310	1	WET ARM ADAPTOR	
9	8036670	1	FRONT WIPER MOTOR ASSY, (includes items 10 thru 16)	
10		1	CARDBOARD WASHER	
11		1	METAL WASHER	
12		1	HEX JAM NUT, 11/16-24	
13		1	RUBBER CAP	
14		1	KNURLED DRIVER	
15		1	LOCKWASHER, 3/8, (internal tooth)	
16		1	ACORN NUT, 1/4-28	
17	8034815	1	PANTO MOUNT PLATE ASSY, (includes items 18 thru 20)	
18		1	PANTO GASKET	
19		1	LOCKWASHER, 1/4, (internal tooth)	
20		1	ACORN NUT, 1/4-28	
21	8036669	2	HEX HD CAPSCREW, 1/4-28X1	
22	1001081306	1	FRONT WIPER MOTOR SPACER	
23	8033075	1	RESERVOIR HOSE, 120"	
24	8584018	AR	TY-RAP MOUNT	
25	8584001	AR	TY-RAP	
26	8035410	1	WASHER RESERVOIR ASSY w/PUMPS, (includes items 27 & 28)	
27		1	RESERVOIR PUMP	
28		1	RESERVOIR CAP	
29	8036657	4	FLAT WASHER, .250, .562, .049	
30	8036662	4	HEX NUT, M6-1.0	
31	8036656	4	PHILLIPS PANHEAD BOLT, M6-1.0X16mm	
32		Ref	SWITCHES, (see Figure 10-4 for details)	

Figure 6-9 Skylight Wiper Assembly

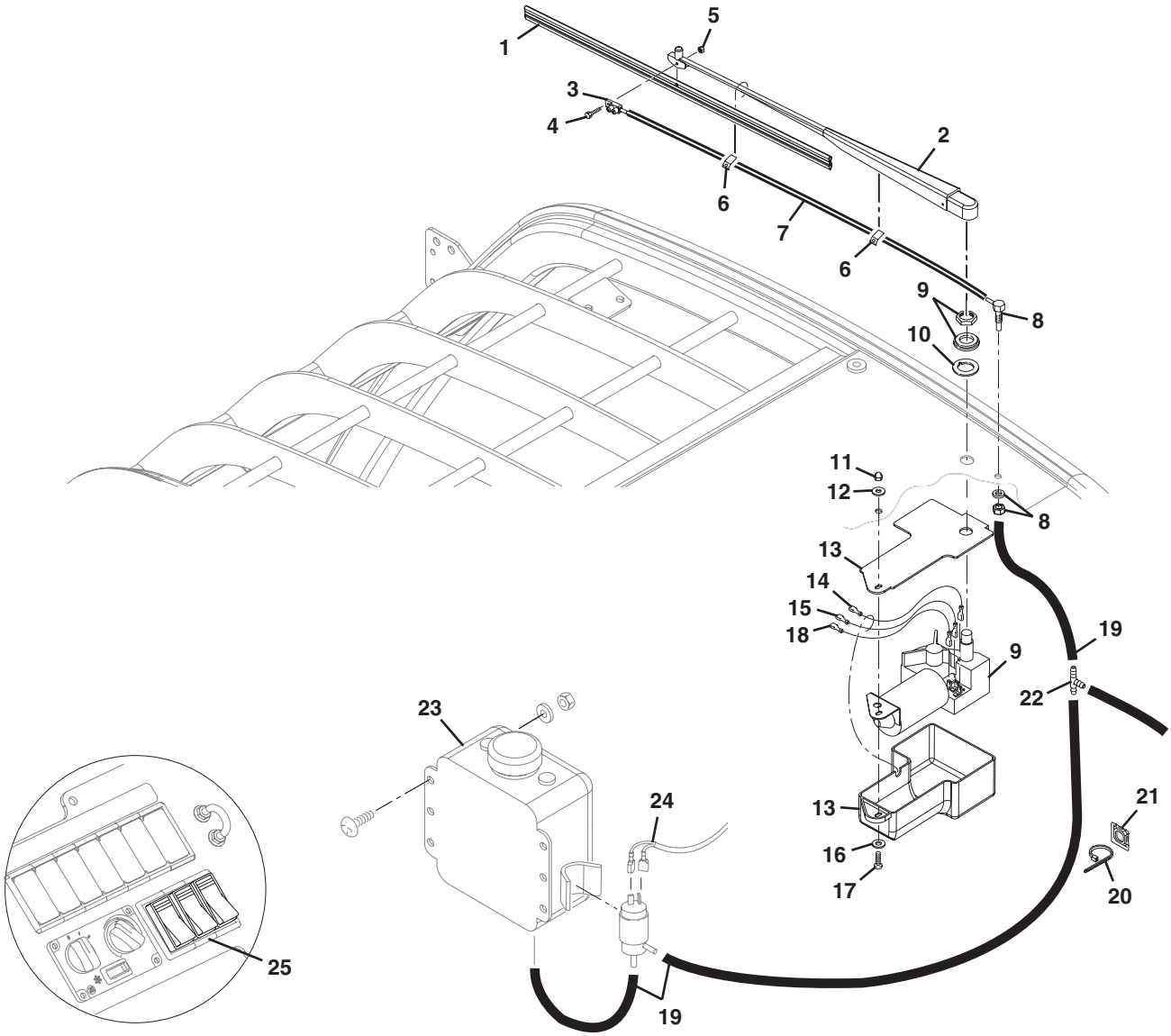

PU2401

Figure 6-9 Skylight Wiper Assembly

Item	Part Number	Qty.	Description	Rev.
	8036677	1	SKYLIGHT WIPER ASSY, (includes items 1 thru 19)	
1	8035498	1	WIPER BLADE, 20" FLEX	
2	8034807	1	WIPER ARM, 15"- 19" ADJUSTABLE	
3		1	SPRAYER NOZZLE	
4		1	BOLT	
5		1	LOCKNUT	
6		2	HOSE CLIPS	
7		1	HOSE	
8	1001081310	1	WET ARM ADAPTOR	
9	8036680	1	SKYLIGHT WIPER MOTOR ASSY	
10	8034808	1	NYLON SPACER	
11	8034805	1	ACORN NUT, #10-24	
12	8036679	1	WASHER	
13	8035493	1	MOTOR ASSY COVER	
14	8036681	1	SKYLIGHT PARK JUMPER WIRE	
15	8036682	1	SKYLIGHT RUN JUMPER WIRE	
16	8036678	1	FLAT WASHER, BLACK NYLON	
17	8036088	1	PAN HEAD SCREW, #10-24X3/4	
18	8036761	1	JUMPER WIRE, WIPER GROUND	
19	8033075	1	WASHER HOSE, 120"	
20	8584001	AR	TY-RAP	
21	8584018	AR	TY-RAP MOUNT	
22	8036072	1	TEE CONNECTOR, (washer hose)	
23		Ref	WASHER RESERVOIR, (see Figure 6-8 for details)	
24		Ref	CLOSED CAB HARNESS, (see Figure 10-4 for details)	
25		Ref	WIPER SWITCHES, (see Figure 10-4 for details)	
	8035499		WET KIT, (includes items 3 thru 7)	

Figure 6-10 Windshield Guard

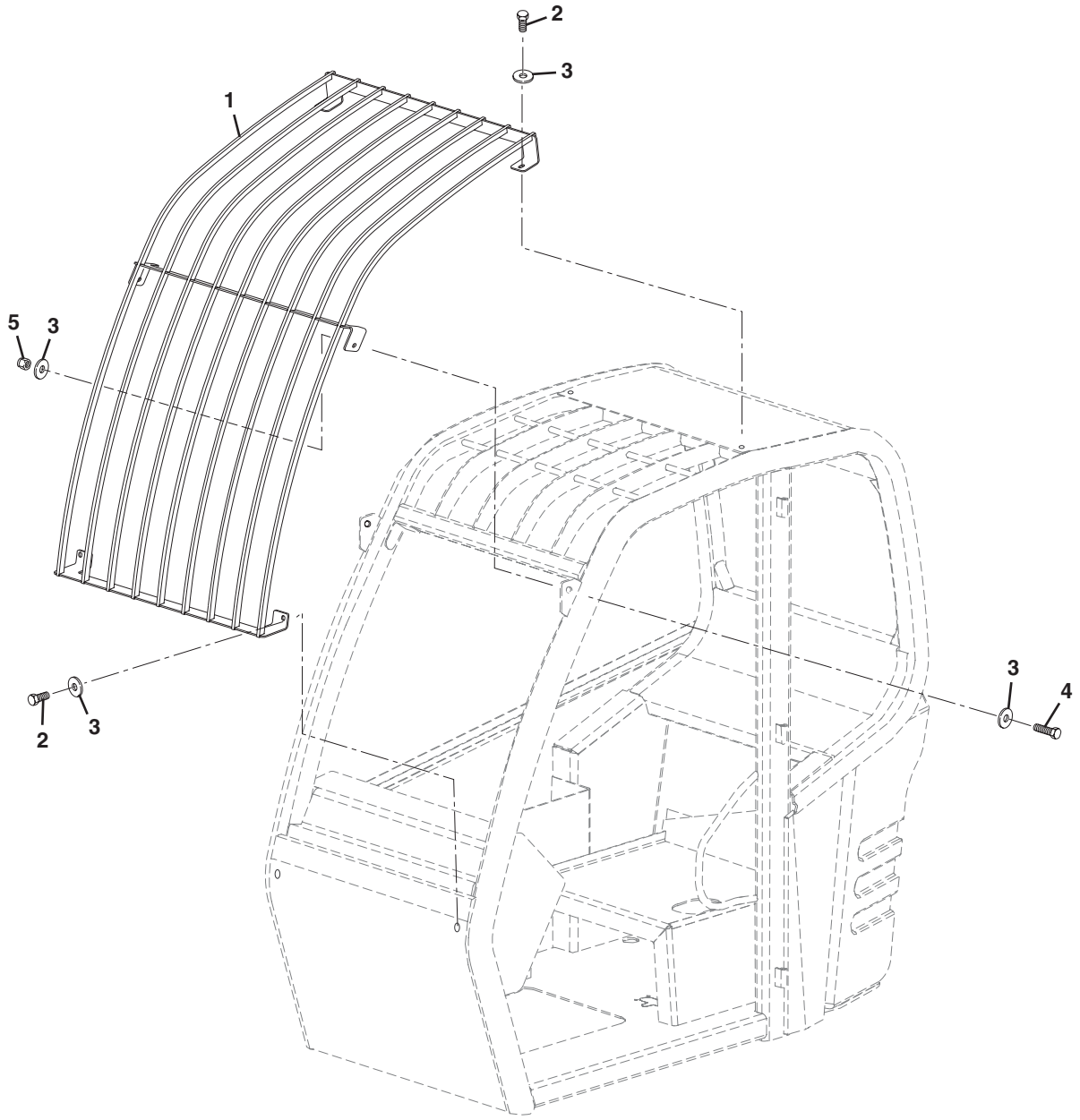

Figure 6-10 Windshield Guard

Item	Part Number	Qty.	Description	Rev.
1	7301326	1	WINDSHIELD GUARD	
2	8303681	4	HEX HD CAPSCREW, 3/8-16X3/4, GR5	
3	8307110	8	WASHER, 3/8	
4	8303675	2	HEX HD CAPSCREW, 3/8-16X1-1/4, GR5	
5	8305645	2	LOCKNUT, 3/8-16	

Figure 6-11 Mirrors

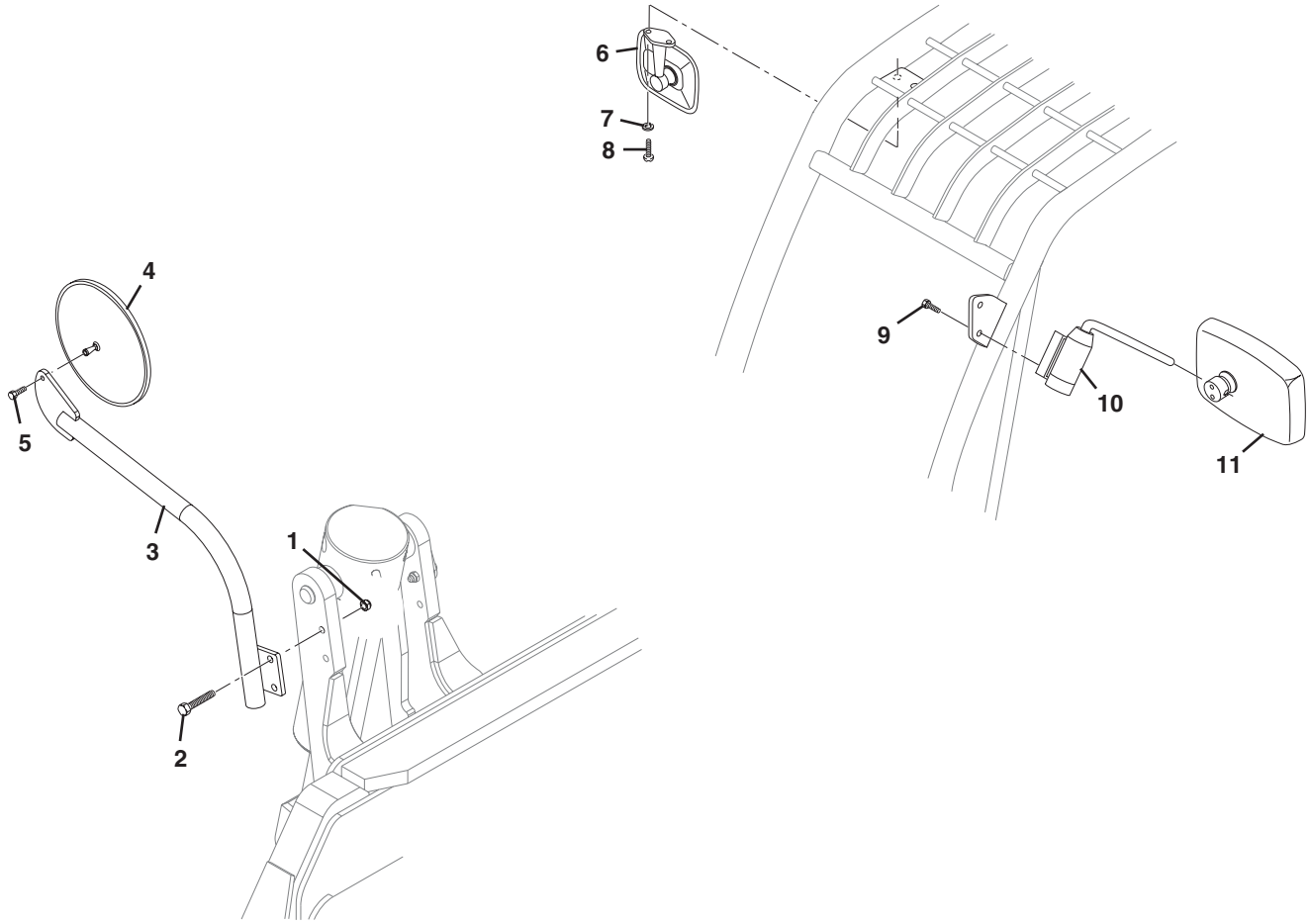

PU2420

Figure 6-11 Mirrors

Item	Part Number	Qty.	Description	Rev.
1	8310625	2	HEX LOCKNUT, M12-1.75	
2	8310218	2	HEX HD CAPSCREW, M12-1.75X55mm, PC8.8	
3	7301171	1	MIRROR BRACKET	
4	8866625	1	10" CONVEX MIRROR, (includes item 5)	
5		1	HEX HD CAPSCREW, 5/16-18	
6	8866516	1	REAR VIEW MIRROR, 7X5.63	
7	8310390	2	PLAIN WASHER, M5	
8	8310690	2	SLOTTED PANHEAD SCREW, M5-0.8X20mm	
9	8303799	2	HEX HD CAPSCREW, M6-1.0X14mm, PC8.8	
10	8866530	1	MIRROR ARM ASSY	
11	8866514	1	CONVEX MIRROR, 11X6.85	

Figure 6-12 Heater System

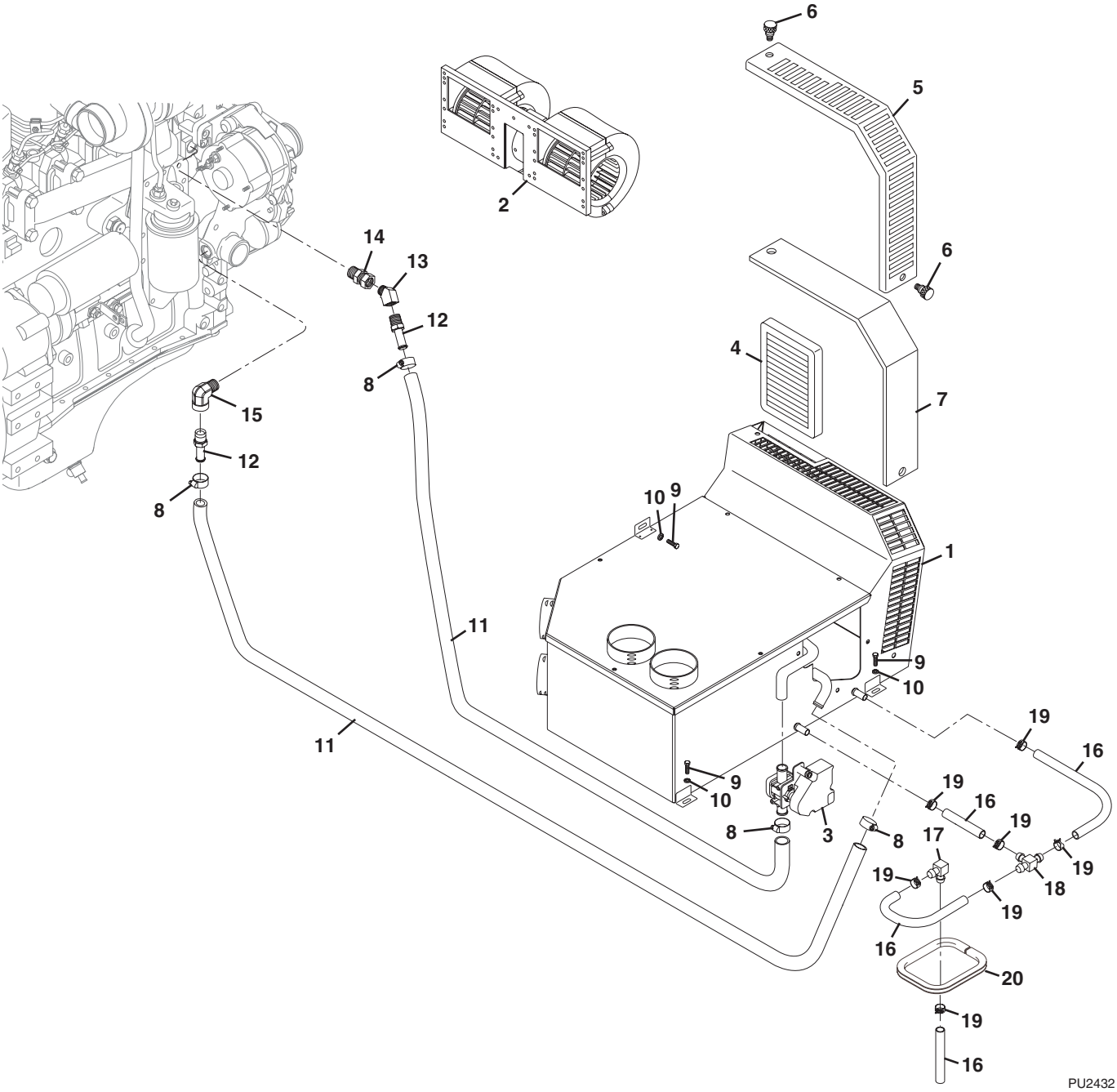

Figure 6-12 Heater System

Item	Part Number	Qty.	Description	Rev.
1	7301259	1	HEATER/BLOWER ASSY, (includes items 2 thru 7)	
2	8036727	1	BLOWER MOTOR ASSY	
3	7301261	1	HEAT VALVE ASSY	
4	8036725	1	FRESH AIR INTAKE FILTER	
5	8036724	1	RECIRCULATION FILTER COVER	
6	8036726	2	THUMB SCREW	
7	8036723	1	FOAM FILTER	
8	8410009	4	HOSE CLAMP, 1.06 DIA	
9	8303606	3	HEX HD CAPSCREW, M8-1.25X20mm, PC8.8	
10	8307222	3	PLAIN WASHER, M8	
11	7301434	2	HEATER ENGINE RETURN & SUPPLY HOSE	
12	8430048	2	HOSE BARB REDUCER, PIPE THREAD 10-8P	
13	8540231	1	ELBOW, 45 DEGREES	
14	8540016	1	SWIVEL ADAPTER, 12-12P	
15	8530016	1	ELBOW, 90 DEGREES	
16	7029412	AR	HOSE ASSY	
17	7029413	1	ELBOW DRAIN, 90 DEGREES	
18	7029414	1	DRAIN TEE, 1/2	
19	7029415	7	DRAIN HOSE CLAMP	
20	4060805	1.4ft	FLEX TRIM	
	7029411	1	DRAIN KIT, (includes items 16 thru 19)	

Figure 6-13 Air Conditioning System

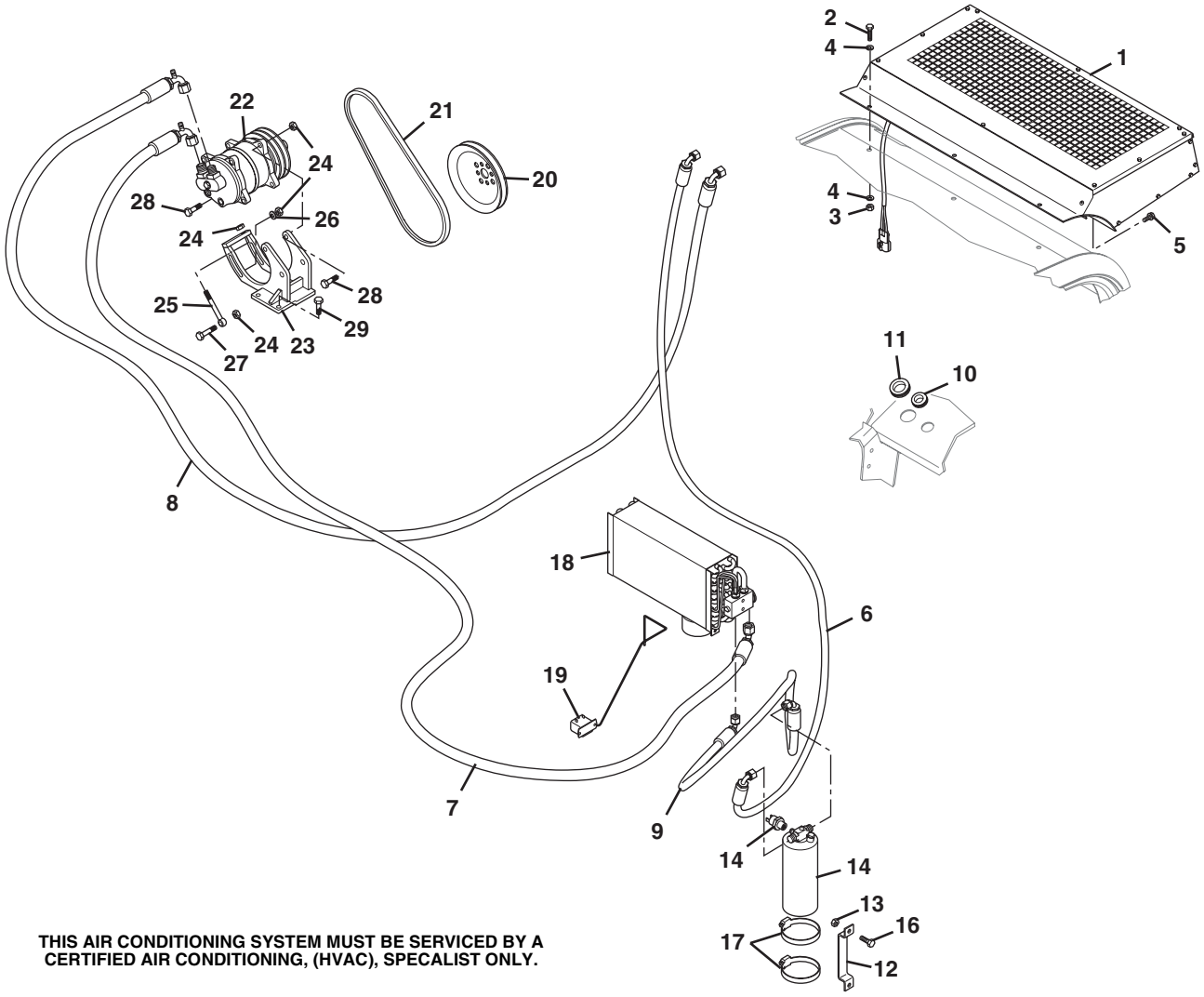

THIS AIR CONDITIONING SYSTEM MUST BE SERVICED BY A CERTIFIED AIR CONDITIONING, (HVAC), SPECALIST ONLY.

PU2440

Figure 6-13 Air Conditioning System

Item	Part Number	Qty.	Description	Rev.
1	7301264	1	AIR CONDITIONER CONDENSER	
2	8303670	3	HEX HD CAPSCREW, .312-18X1.00, GR5	
3	8305626	3	HEX LOCKNUT, .312-18	
4	8307203	6	FLAT WASHER, .312	
5	8310683	2	WASHER HD SCREW, .312-18X.75 SELF DRILLING	
6	7301441	1	HOSE ASSY - REFRIGERATION	
7	7301442	1	HOSE ASSY - REFRIGERATION	
8	7301443	1	HOSE ASSY - REFRIGERATION	
9	7301444	1	HOSE ASSY - REFRIGERATION	
10	8660016	1	RUBBER GROMMET, 1 BOREX1.75 OD	
11	8660017	1	RUBBER GROMMET, 1.75 BOREX2.13 OD	
12	7138478	1	AIR CONDITIONER DRIER BRACKET	
13	7138483	1	AIR CONDITIONER DRIER RECEIVER	
14	8223531	1	AIR CONDITIONER PRESSURE SWITCH	
15	8303544	2	HEX HD CAPSCREW, M6-1X20mm, PC8.8	
16	8305047	2	HEX NUT, M6-1	
17	8405203	2	GEAR CLAMP, 3" DIA	
18	7301262	1	EVAPORATOR COIL	
19	7301302	1	THERMOSTAT	
20	7138361	1	ACCESSORY DRIVE SHEAVE	
21	7301815	1	COMPRESSOR V BELT	
22	8276019	1	AIR CONDITIONER COMPRESSOR	
23	7301782	1	COMPRESSOR MOUNT BRACKET	
24	8305630	4	HEX LOCKNUT, M10-1.5	
25	8310737	1	MALE ROD END, M10-1.5X100mm	
26	8307221	1	FLAT WASHER, M10	
27	8310736	1	HEX HD CAPSCREW, M10-1.5X50mm, PC10.9	
28	8310534	2	HEX HD CAPSCREW, M10-1.5X40mm, PC10.9	
29	8310592	3	HEX HD CAPSCREW, M10-1.5X35mm, PC10.9	

Figure 6-14 Ventilation Hoses & Vents

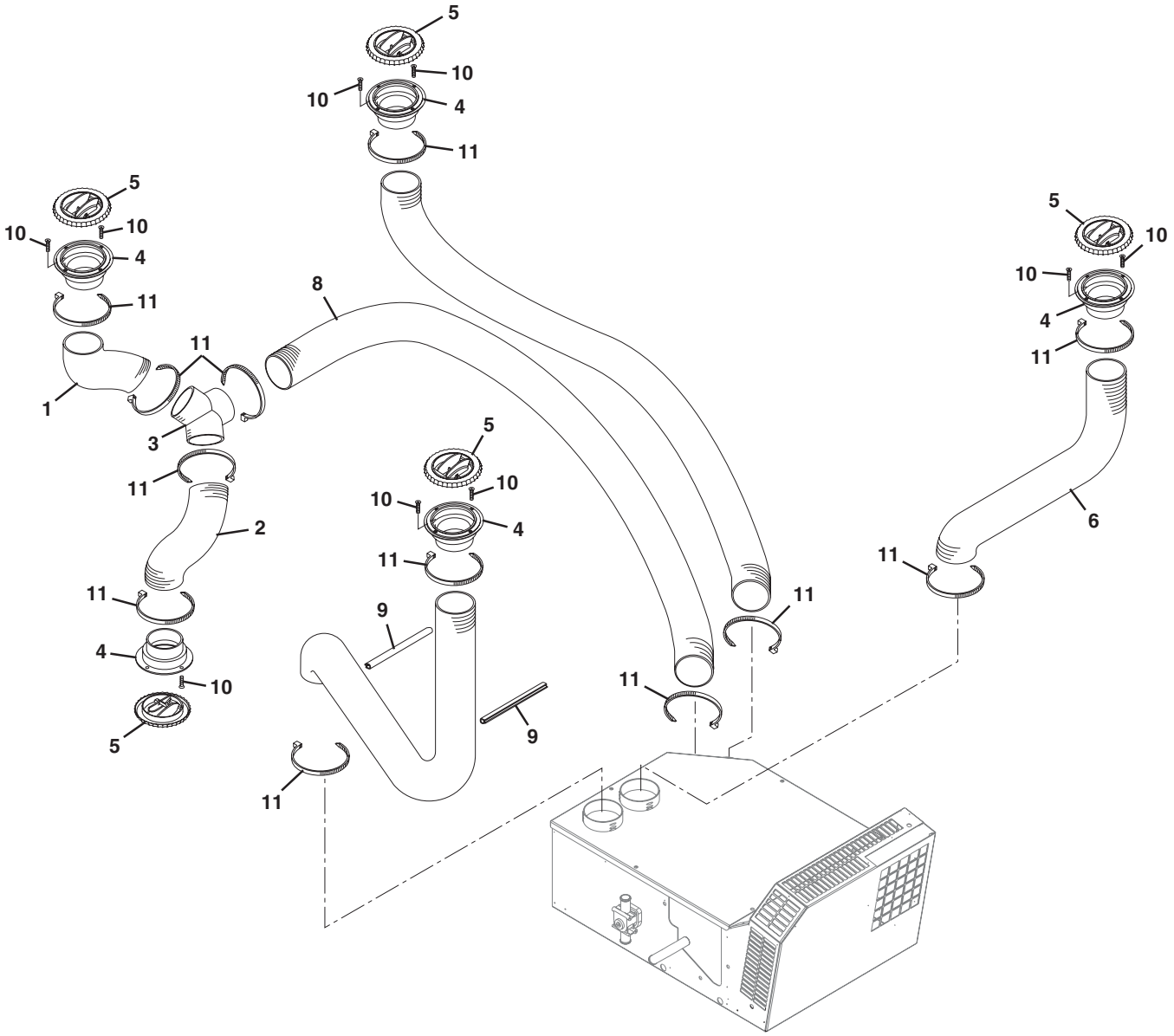

Figure 6-14 Ventilation Hoses & Vents

Item	Part Number	Qty.	Description	Rev.
1	7301457	1	AIR DUCT HOSE ASSY	
2	7301458	1	AIR DUCT HOSE ASSY	
3	7301476	1	T-SPLICE ADAPTER	
4	7301478	5	HOSE ADAPTER	
5	7301479	5	ROTATING/CLOSING LOUVER	
6	7301657	1	AIR DUCT HOSE ASSY	
7	7301658	2	AIR DUCT HOSE ASSY	
8	7301659	1	AIR DUCT HOSE ASSY	
9	7301660	2	EDGE MOULDING	
10	8310726	10	SELF TAPPING SCREW, OVAL COUNTERSUNK	
11	10720496	12	TY-RAP	

This Page Intentionally Left Blank

SECTION 7
CONTROLS

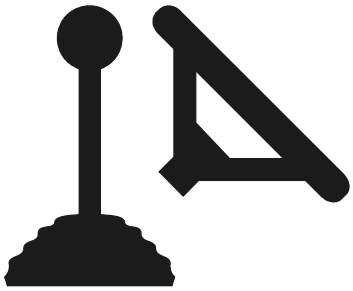

Figure 7-1 Service Brake & Pedal Assembly

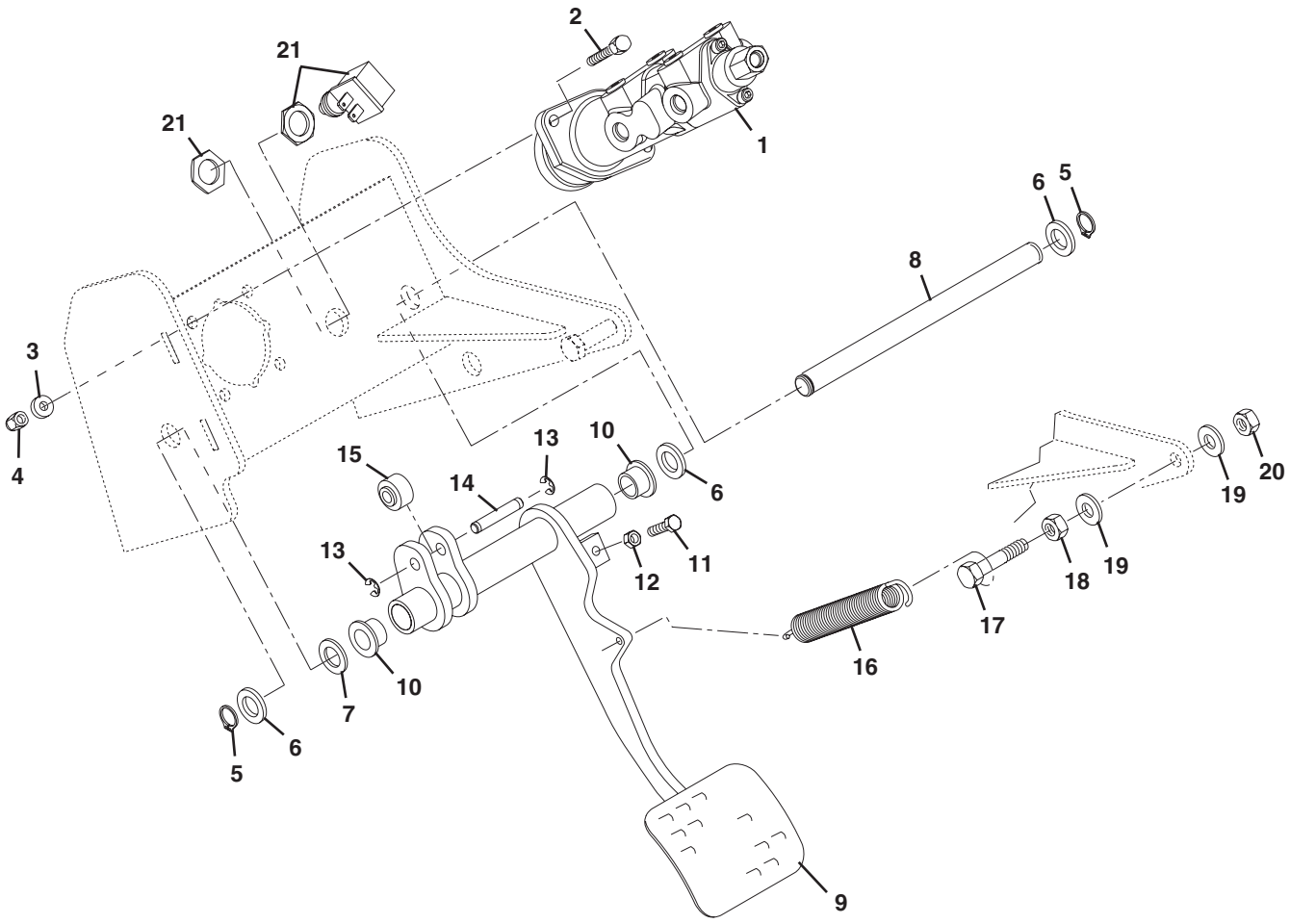

PU2490

Figure 7-1 Service Brake & Pedal Assembly

Item	Part Number	Qty.	Description	Rev.
1	8902316	1	BRAKE VALVE, **(644-E excluding S/N 0160036724, 0160036811, 0160036907 & 0160037012)**, **(944-E excluding S/N 0160034634, 0160036710, 0160036722, 0160036735 & 0160036738)**	
	1001103493	1	BRAKE VALVE, **(644-E S/N 0160036724, 0160036811, 0160036907 & 0160037012)**, **(944-E S/N 0160034634, 0160036710, 0160036722, 0160036735 & 0160036738)**	
2	8310476	2	HEX HD CAPSCREW, M8-1.25X35mm, PC 8.8	
3	8307222	2	PLAIN WASHER, M8	
4	8305638	2	HEX LOCKNUT, M8X1.25	
5	8630020	2	SNAP RING, .75 INTERNAL HEAVY DUTY	
6	8310508	3	SHIM WASHER, .755X.075X1.25	
7	8310507	1	SHIM WASHER, .755X.048X1.25	
8	7139108	1	BRAKE PEDAL SHAFT	
9	7301066	1	BRAKE PEDAL ASSY, (includes items 10 thru 15)	
10	7300143	2	OILITE FLANGE BUSHING	
11	8303739	1	HEX HD CAPSCREW, 5/16-18X1-1/4, GR 5	
12	8310453	1	HEX NUT, 5/16-18, GR 5	
13	7300135	2	PIN CLIP	
14	7300136	1	SHAFT PIN	
15	7300137	1	ROLLER, 1 DIA	
16	8700125	1	EXTENSION SPRING, 1.00ODX7.12 LG	
17	8303261	1	HEX HD CAPSCREW, M12-1.75X100mm, PC 8.8	
18	8305044	1	HEX NUT, M12	
19	8307220	2	PLAIN WASHER, M12-1.75	
20	8310625	1	HEX LOCKNUT, M12-1.75	
21	8223238	1	STABIL-TRAK SWITCH	

Figure 7-2 Throttle Group Assembly

644E

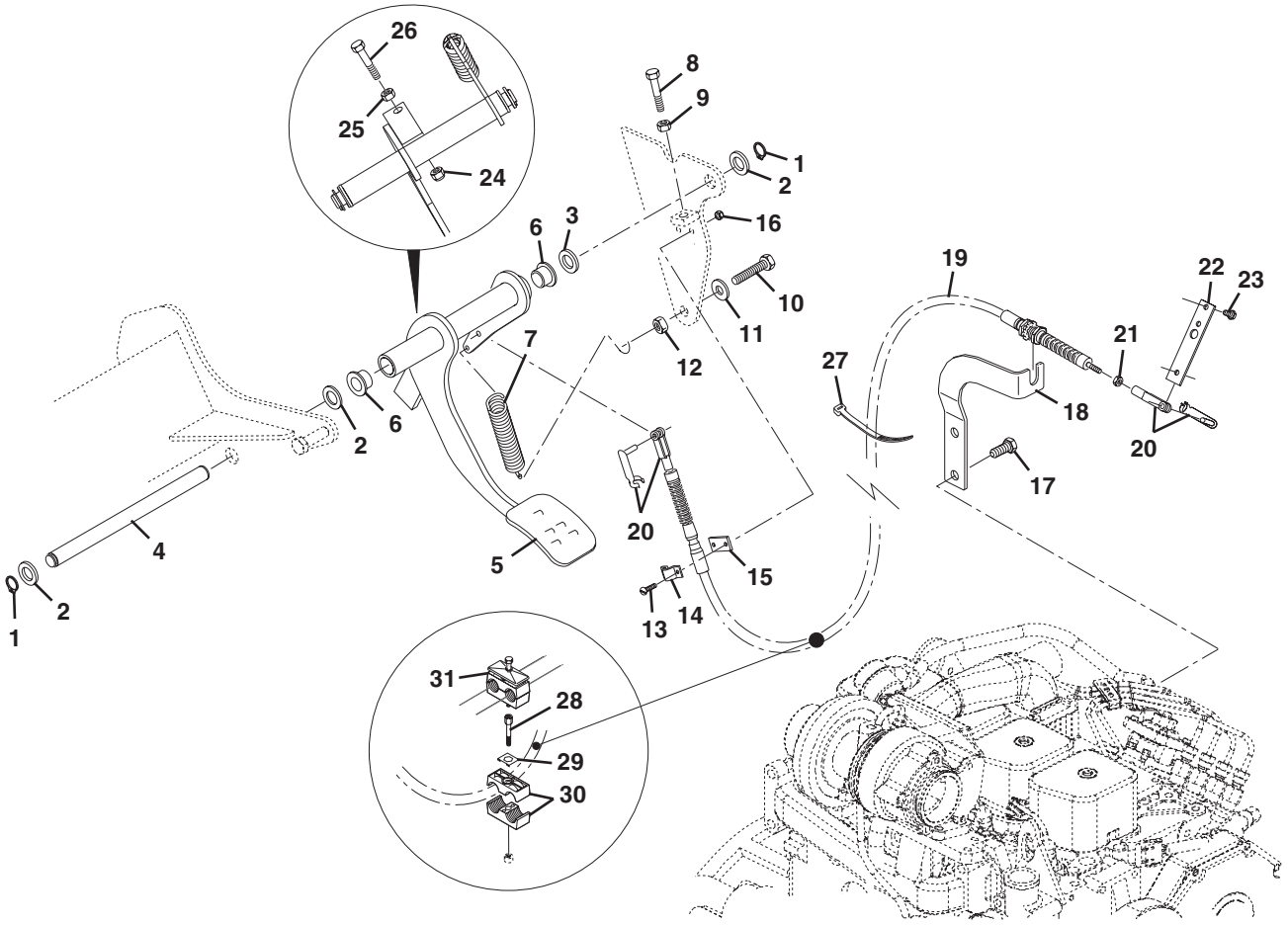

PU2500

Figure 7-2 Throttle Group Assembly

Item	Part Number	Qty.	Description	Rev.
1	8630020	2	SNAP RING, .75 INTERNAL HEAVY DUTY	
2	8310508	3	SHIM WASHER, .755X.075X1.25	
3	8310507	1	SHIM WASHER, .755X.048X1.25	
4	7139108	1	THROTTLE PEDAL SHAFT	
5	7151285	1	ACCELERATOR PEDAL, (includes item 6)	
6	7300143	2	OILITE FLANGE BUSHING	
7	8700126	1	EXTENSION SPRING, 1.00 ODX7.23 LG	
8	8310716	1	HEX HD CAPSCREW, M8-1.25X55mm, PC8.8	
9	8305043	1	HEX NUT, M8-1.25	
10	8303624	1	HEX HD CAPSCREW, 1/2-13X1, GR5	
11	8307112	1	PLAIN WASHER, 1/2	
12	8310746	1	COUPLING NUT, 1/2-13X1.25	
13	8303837	2	PAN HEAD SCREW, #10-24X3/4	
14	10114383	1	CABLE CLAMP	
15	10116401	1	SHIM, CABLE CLAMP SPACER	
16	8310085	2	HEX LOCKNUT, #10-24	
17	8303790	2	HEX HD CAPSCREW, M12-1.75X30mm, PC8.8	
18	7300682	1	THROTTLE CABLE BRACKET	
19	8160102	1	THROTTLE CABLE, (includes 1 of item 20)	
20	10138818	2	YOKE END w/SPRING PIN	
21	8305402	1	HEX JAM NUT,1/4	
22	7127091	1	THROTTLE LEVER EXTENSION	
23	8303799	2	HEX HD CAPSCREW, M6-1.0X14mm, PC8.8	
24	8305630	1	HEX LOCKNUT, M10-1.5	
25	8305038	1	HEX NUT, M10-1.5	
26	8310715	1	HEX HD CAPSCREW, M10-1.5X55mm, PC8.8	
27	8584003	AR	TY-RAP	
28	8750039	1	STACKING BOLT	
29	8750017	1	LOCKING PLATE	
30	8750024	1	CLAMP SET	
31		Ref	HOSE CLAMP, (see Figure 8-1 for details)	

Figure 7-2 Throttle Group Assembly

644E

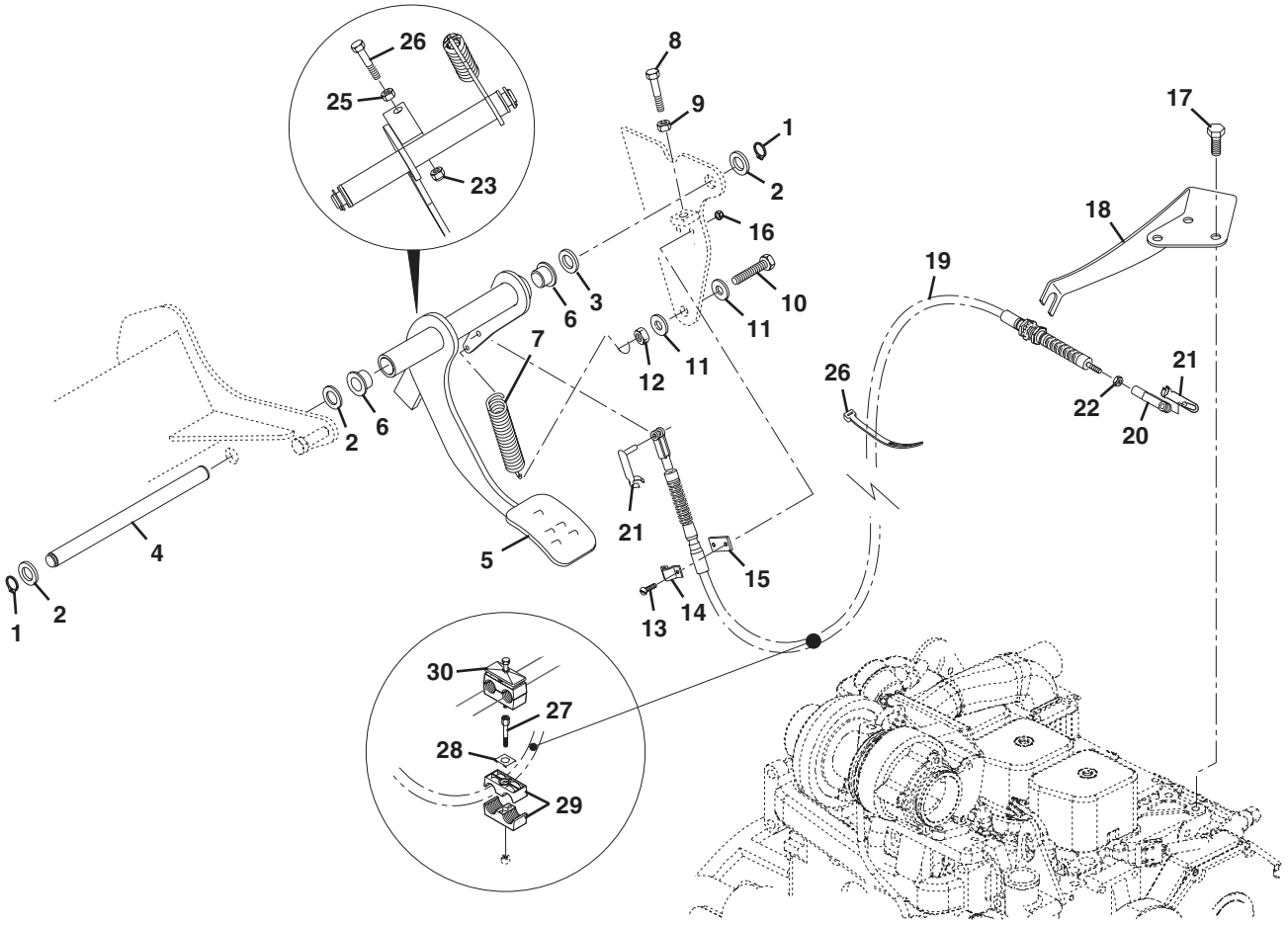

PU2510

Figure 7-2 Throttle Group Assembly

Item	Part Number	Qty.	Description	Rev.
1	8630020	2	SNAP RING, .75 INTERNAL HEAVY DUTY	
2	8310508	3	SHIM WASHER, .755X.075X1.25	
3	8310507	1	SHIM WASHER, .755X.048X1.25	
4	7139108	1	THROTTLE PEDAL SHAFT	
5	7151285	1	ACCELERATOR PEDAL, (includes item 6)	
6	7300143	2	OILITE FLANGE BUSHING	
7	8700126	1	EXTENSION SPRING, 1.00 ODX7.23 LG	
8	8310716	1	HEX HD CAPSCREW, M8-1.25X55mm, PC8.8	
9	8305043	1	HEX NUT, M8-1.25	
10	8303785	1	HEX HD CAPSCREW, M12-1.75X45mm, PC8.8	
11	8307220	2	PLAIN WASHER, M12	
12	8305044	1	HEX LOCKNUT, M12-1.75	
13	8303837	2	PAN HEAD SCREW, #10-24X3/4	
14	10114383	1	CABLE CLAMP	
15	10116401	1	SHIM, CABLE CLAMP SPACER	
16	8310085	2	HEX LOCKNUT, #10-24	
17	8310628	3	HEX HD CAPSCREW, M10-1.5X14mm, PC8.8	
18	7302331	1	THROTTLE CABLE BRACKET	
19	8160103	1	THROTTLE CABLE, (includes 1 of item 20)	
20	10138818	2	YOKE END w/SPRING PIN, (includes item 21)	
21	8310695	1	SPRING PIN	
22	8305402	1	HEX JAM NUT, 1/4	
23	8305630	1	HEX LOCKNUT, M10-1.5	
24	8305038	1	HEX NUT, M10-1.5	
25	8310715	1	HEX HD CAPSCREW, M10-1.5X55mm, PC8.8	
26	8584003	AR	TY-RAP	
27	8750039	1	STACKING BOLT	
28	8750017	1	LOCKING PLATE	
29	8750024	1	CLAMP SET	
30		Ref	HOSE CLAMP, (see Figure 8-1 for details)	

Figure 7-2 Throttle Group Assembly

944E

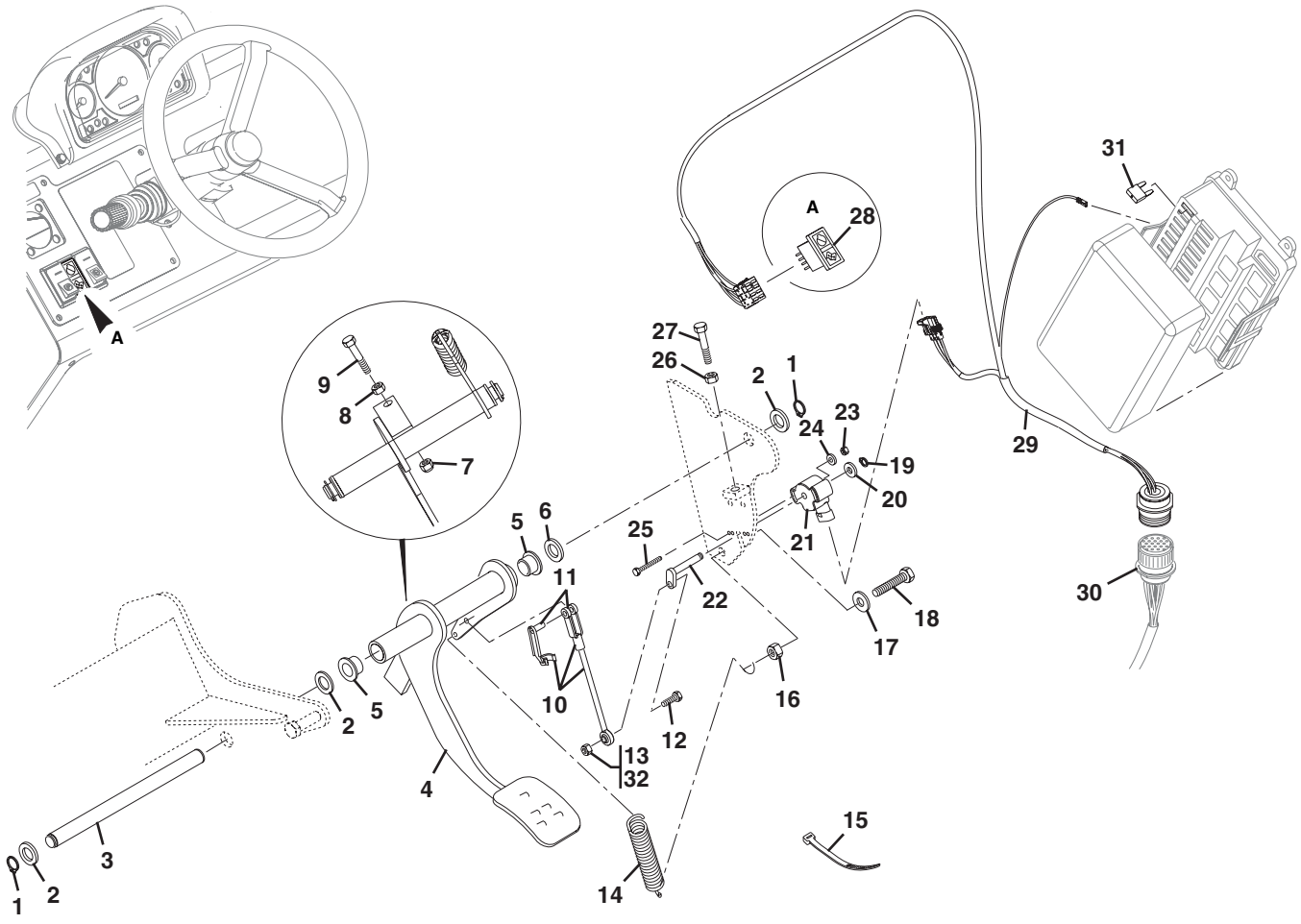

PU2521

Figure 7-2 Throttle Group Assembly

Item	Part Number	Qty.	Description	Rev.
		Ref	THROTTLE PEDAL ASSY, (includes items 1 thru 9, 14, 16, 17, 18, 26 & 27), (no longer available, order 2915158, Throttle Pedal Field Kit)	
1	8630020	2	HEAVY DUTY SNAP RING, .75 INTERNAL	
2	8310508	3	SHIM WASHER, .755X.075X1.25	
3	7139108	1	THROTTLE PEDAL SHAFT	
4	7151285	1	ACCELERATOR PEDAL, (includes item 5)	
5	7300143	2	OILITE FLANGE BUSHING	
6	8310507	1	SHIM WASHER, .755X.048X1.25	
7	8305630	1	HEX LOCKNUT, M10-1.5	
8	8305038	1	HEX NUT, M10-1.5	
9	8310715	1	HEX HD CAPSCREW, M10-1.5X55mm, PC8.8	
10	7301394	1	THROTTLE LINKAGE ASSY, (includes item 11)	
11	10138818	1	YOKE END w/SPRING PIN	
12	8303005	1	HEX HD CAPSCREW, .25-20X.875, GR5	
13	8305624	1	HEX LOCKNUT, .25-20	
14	8700126	1	EXTENSION SPRING, 1.00 ODX7.23 LG	
15	8584003	AR	TY-RAP	
16	8310746	1	COUPLING NUT, 1/2-13X1.25	
17	8307112	1	PLAIN WASHER, M12	
18	8303624	1	HEX HD CAPSCREW, 1/2-13X1, GR5	
19	8630027	1	EXTERNAL SNAP RING, 5/16	
20	8307202	1	PLAIN WASHER, .25	
21	7301392	1	THROTTLE SENSOR, ROTARY POSTION	
22	7301393	1	ROTARY POSITION SENSOR LEVER	
23	8310410	2	HEX LOCKNUT, #8-32	
24	8310732	2	PLAIN WIDE WASHER, .188	
25	8310728	2	HEX HD CAPSCREW, #8-32X1.5	
26	8305043	1	HEX NUT, M8-1.25	
27	8310716	1	HEX HD CAPSCREW, M8-1.25X55mm, PC8.8	
28	8223081	1	ECM SWITCH INDICATOR	
29	7301413	1	ECM CAB HARNESS	
30		Ref	ECM POWER HARNESS, (see Figure 10-2 for details)	
31		Ref	FUSE, (see Figure 10-5 for details)	
32	0100011	AR	LOCTITE, #242, (apply to item 13)	
	2915158	1	THROTTLE PEDAL FIELD KIT, (includes items 4341154, Throttle Pedal Assy & 4923349, Jumper Harness), (see Figure 7-2 S/N 0160016083 & After for details)	

Figure 7-2 Throttle Group Assembly

944E

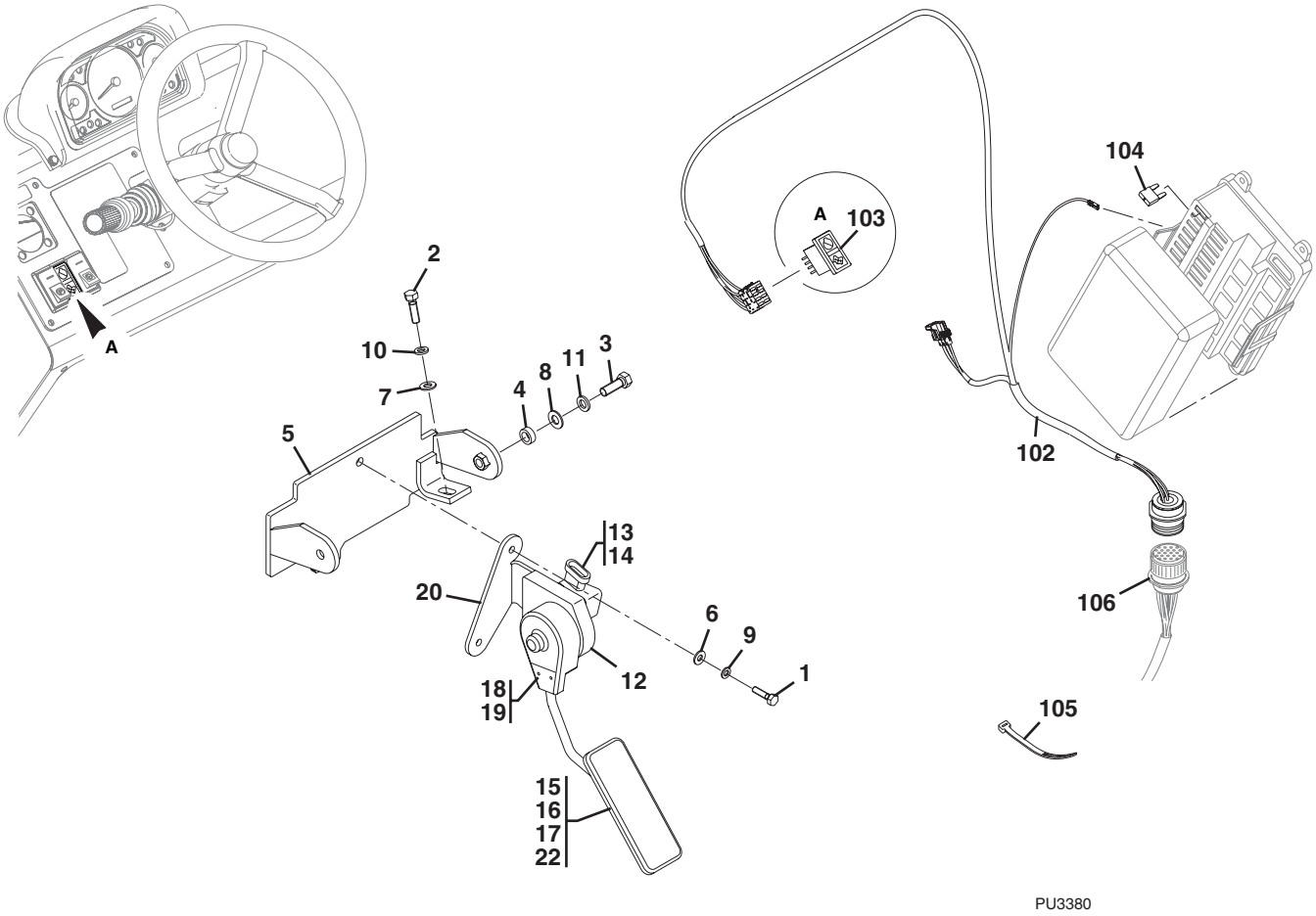

Figure 7-2 Throttle Group Assembly

Item	Part Number	Qty.	Description	Rev.
	4341154	1	THROTTLE PEDAL ASSY, (includes items 1 thru 23)	A
1	0541408	2	HEX HD CAPSCREW, 1/4-20X1	
2	0641509	1	HEX HD CAPSCREW, 5/16-18X1-1/8	
3	0641609	2	HEX HD CAPSCREW, 3/8-16X1-1/8	
4	3576286	2	SPACER	
5	4341156	1	WELDMENT	
6	4711400	2	WASHER, 1/4	
7	4711500	1	WASHER, 5/16	
8	4711600	2	WASHER, 3/8	
9	4761400	2	WASHER, 1/4	
10	4761500	1	WASHER, 5/16	
11	4761600	2	WASHER, 3/8	
12	80383410	1	ELECTRIC THROTTLE PEDAL	
13	70020551	1	SENSOR KIT	
14		2	SCREW	
15		1	SENSOR	
16	7026479	1	PEDAL	
17	7026480	1	SPRING	
18	7026481	1	PEDAL ARM	
19	7026482	1	CLAMP	
20	7026483	2	SCREW	
21	7029906	1	BRACKET	
22	7029907	2	SCREW	
23	7026484	1	PEDAL PIN	
	7301446	1	CAB ELECTRICAL ASSY, (includes items 101 thru 105)	D
102	4923344	1	ECM CAB HARNESS	
103	8223081	1	ECM INDICATOR	
104		1	FUSE, 3 AMPS, (see Figure 10-5 for details)	
105	8584001	6	TY-RAP	
106		Ref	ECM POWER HARNESS, (see Figure 10-2 for details)	
			NOTE: ITEM NUMBERS NOT LISTED ARE NOT USED ON THIS FIGURE	

Figure 7-3 Steering Column

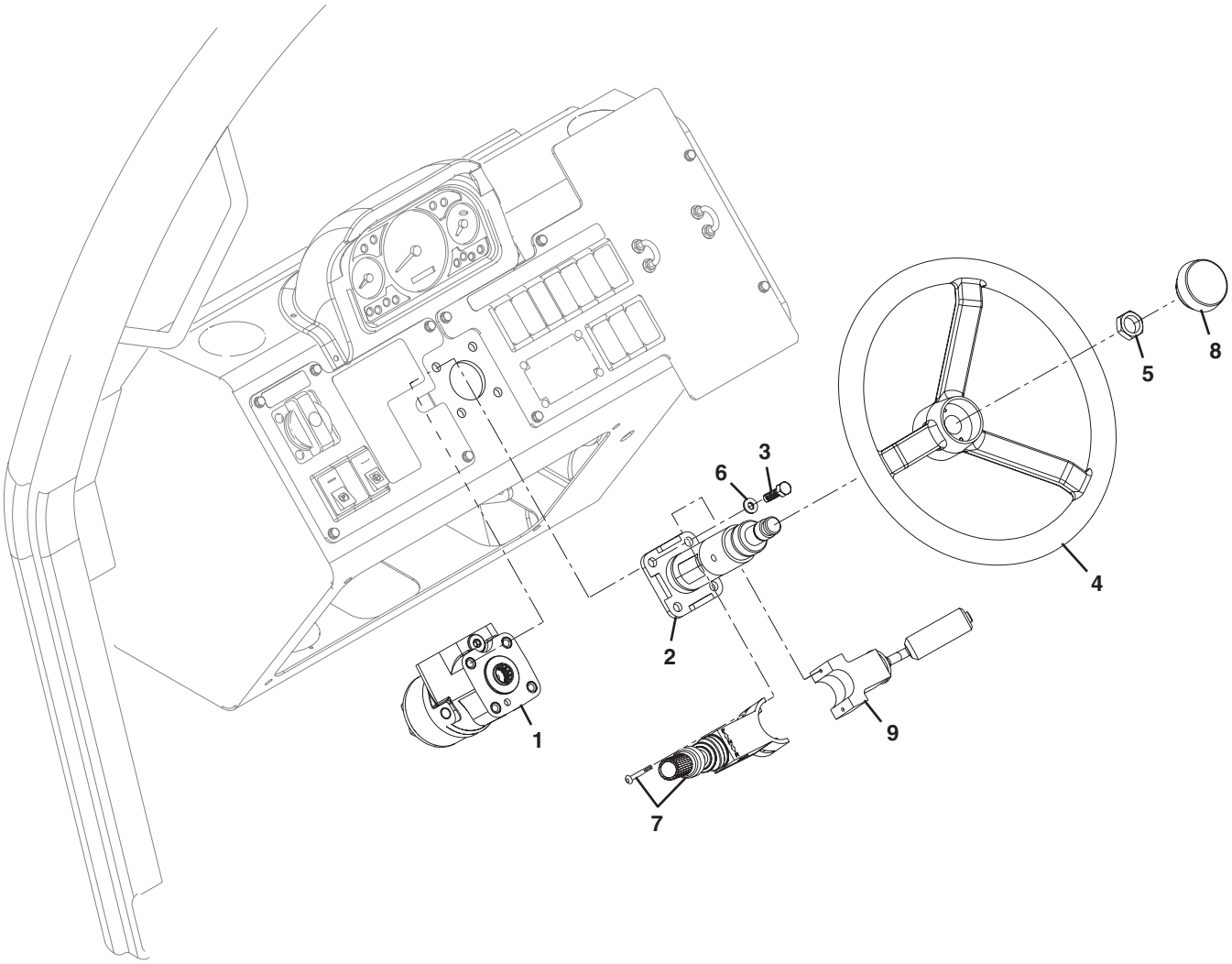

PU2530

Figure 7-3 Steering Column

Item	Part Number	Qty.	Description	Rev.
1	7300409	1	STEER ORBITAL VALVE ASSY	
2	7138833	1	STEERING COLUMN	
3	8303675	4	HEX HD CAPSCREW, 3/8-16X1.25, GR5	
4	7138836	1	STEERING WHEEL	
5	8305916	1	STEERING WHEEL NUT	
6	8305916	4	WASHER, 3/8	
7		Ref	SELECTOR TRANSMISSION CONTROL, (see Figure 10-3 for details)	
8		Ref	HORN BUTTON SWITCH, (see Figure 10-3 for details)	
9		Ref	TURN SIGNAL CONTROL SELECTOR, (see Figure 12-1 for details)	

Figure 7-4 Frame Sway Control Valve Assembly

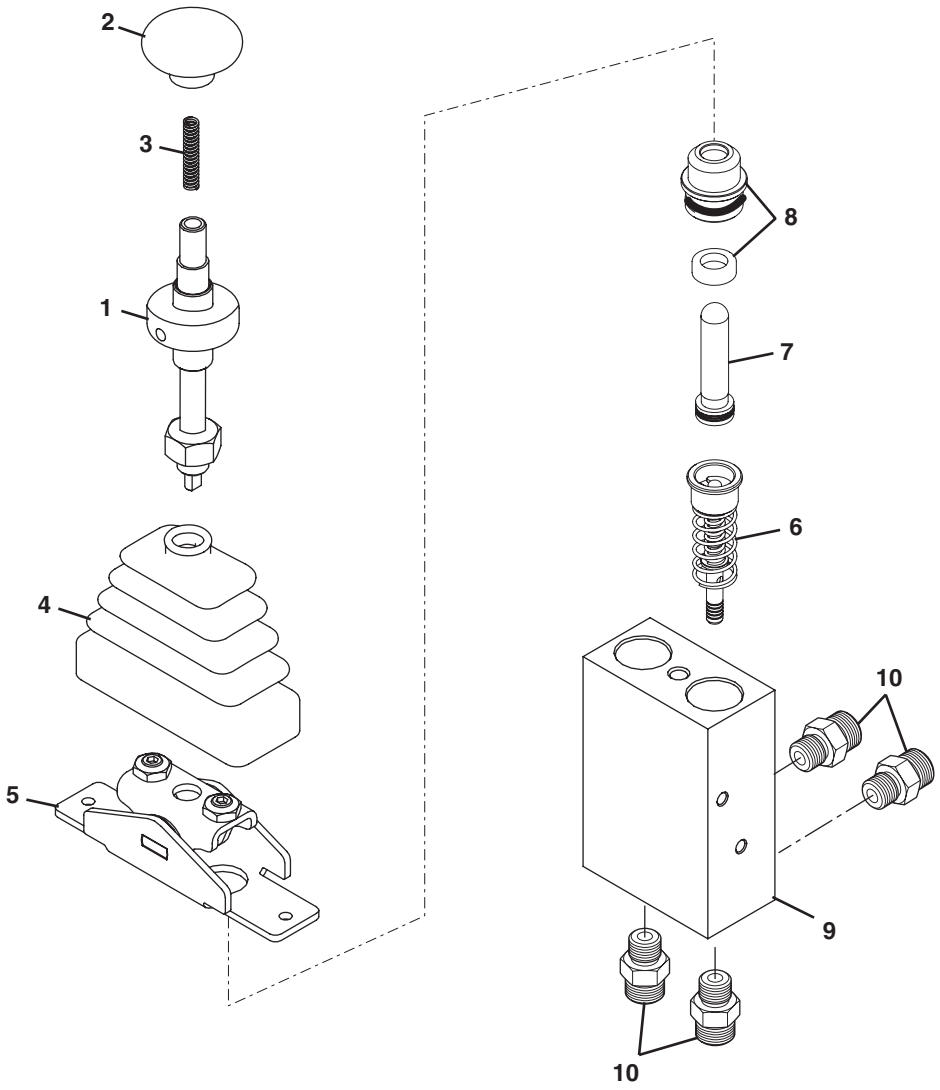

PU2540

Figure 7-4 Frame Sway Control Valve Assembly

Item	Part Number	Qty.	Description	Rev.
	8902309	1	FRAME SWAY CONTROLLER, (includes all items)	A
1	8036613	1	HANDLE ASSY, (includes items 2 thru 4)	
	8036616	1	SET SCREW	
2	8036614	1	KNOB	
3	8036615	1	SPRING	
4	8036617	1	BOOT	
5	8036618	1	JOINT MECHANISM ASSY, (includes mounting bolt)	
6	8036619	1	CAPSULE ASSY, (includes item 7)	
7	7029419	1	PLUNGER ASSY, (includes item 8)	
8	8036620	1	PLUNGER SEAL KIT	
9		1	VALVE BODY	
10	2110606	4	CONNECTOR	

Figure 7-5 Joystick Control Valve Assembly

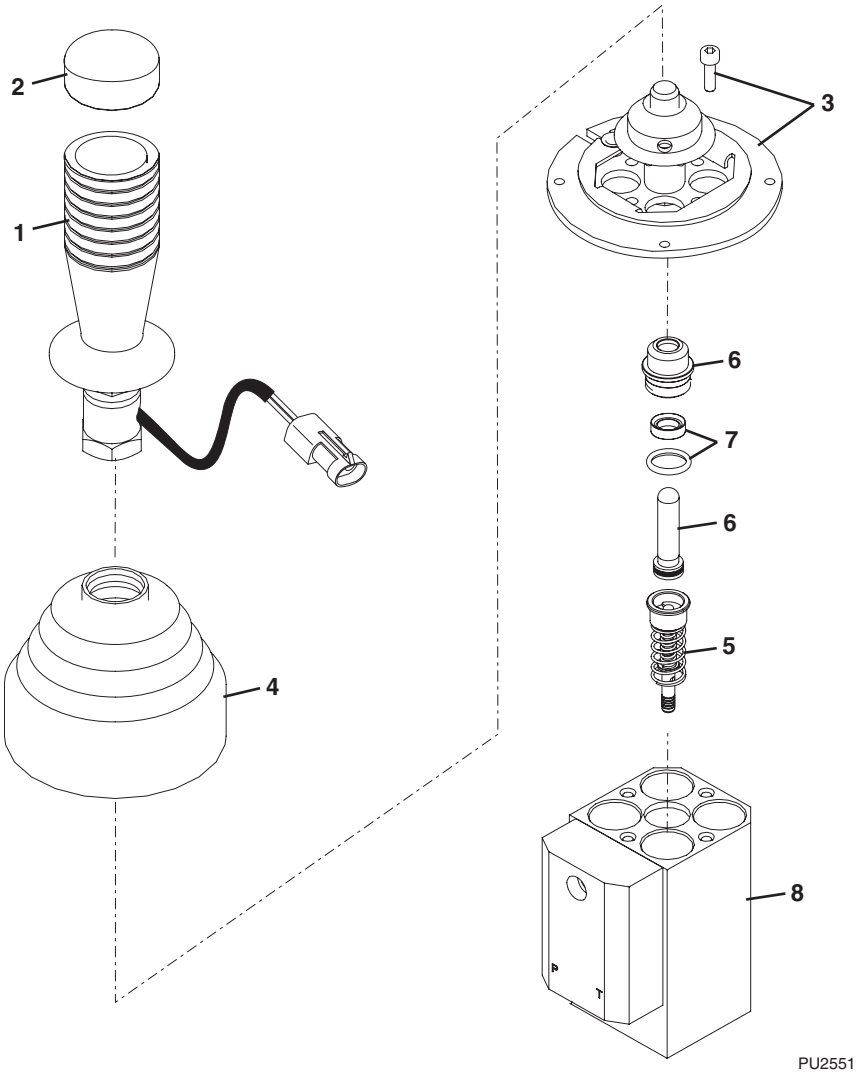

Figure 7-5 Joystick Control Valve Assembly

Item	Part Number	Qty.	Description	Rev.
	8902330	1	JOYSTICK CONTROL VALVE ASSY, (includes all items)	
1	8036621	1	HANDLE ASSY w/SWITCH, (includes item 2)	
2	8036625	1	BUTTON COVER	
3	8036622	1	JOINT ASSY, (includes item 4)	
4	8036623	1	BOOT	
5	8036624	4	CAPSULE ASSY, (includes item 6)	
6	7029419	1	PLUNGER ASSY, (includes item 7)	
7	8036620	1	PLUNGER SEAL KIT	
8		1	VALVE BODY	

Figure 7-6 Joystick Control Valve Assembly, (Single)

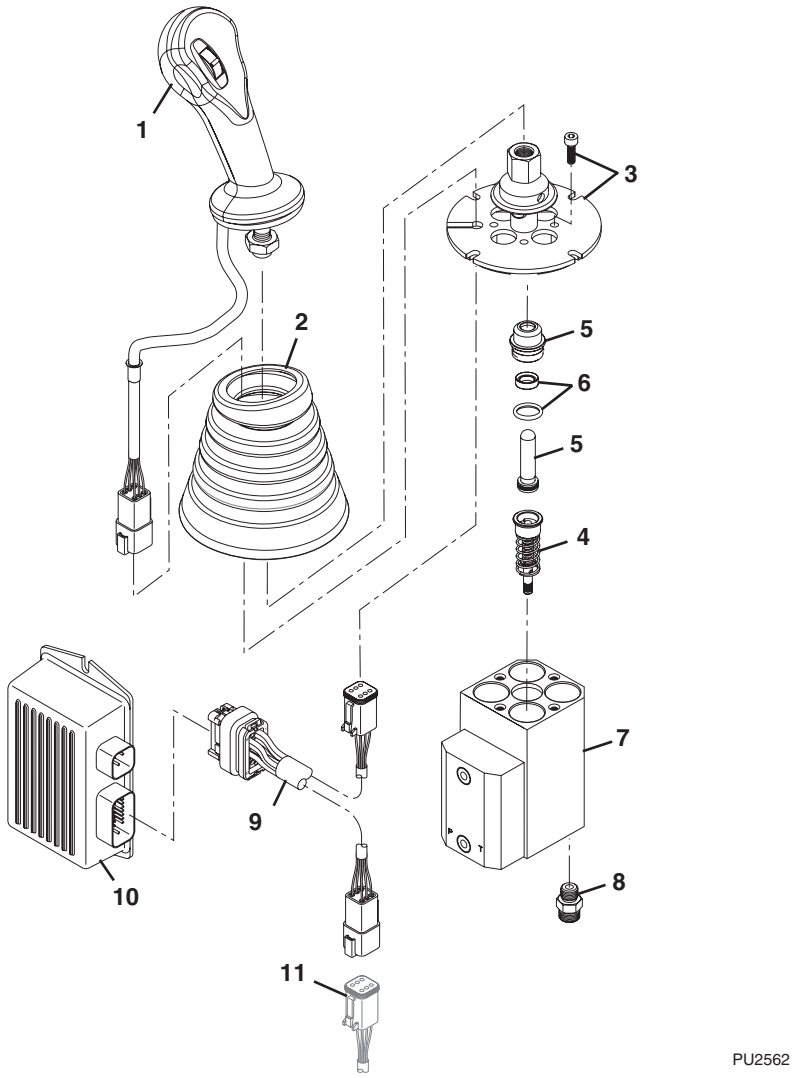

Figure 7-6 Joystick Control Valve Assembly, (Single)

Item	Part Number	Qty.	Description	Rev.
	8902335	1	JOYSTICK CONTROL VALVE ASSY, (single), (includes items 1 thru 10)	
1		1	HANDLE ASSY w/SWITCH, (not available separately; order 8902335)	
2	8036805	1	BOOT	
3	8036807	1	JOINT ASSY	
4	8036624	4	CAPSULE ASSY (includes item 5)	
5	7029419	1	PLUNGER ASSY (includes item 6)	
6	8036620	1	PLUNGER SEAL KIT	
7		1	VALVE BODY	
8	2110606	6	HOSE CONNECTORS	
9	7301810	1	JUMPER HARNESS	
10	7301809	1	JOYSTICK CONTROLLER	
11		Ref	ELECTRICAL COMPONENTS, (see Figure 10-3 for details)	

This Page Intentionally Left Blank

SECTION 8
HYDRAULIC CIRCUITS

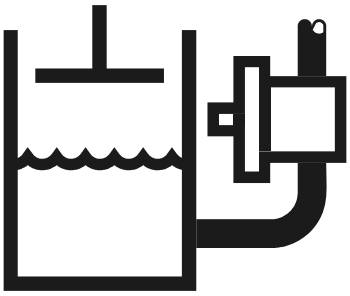

Figure 8-1 Pump, Suction & Return

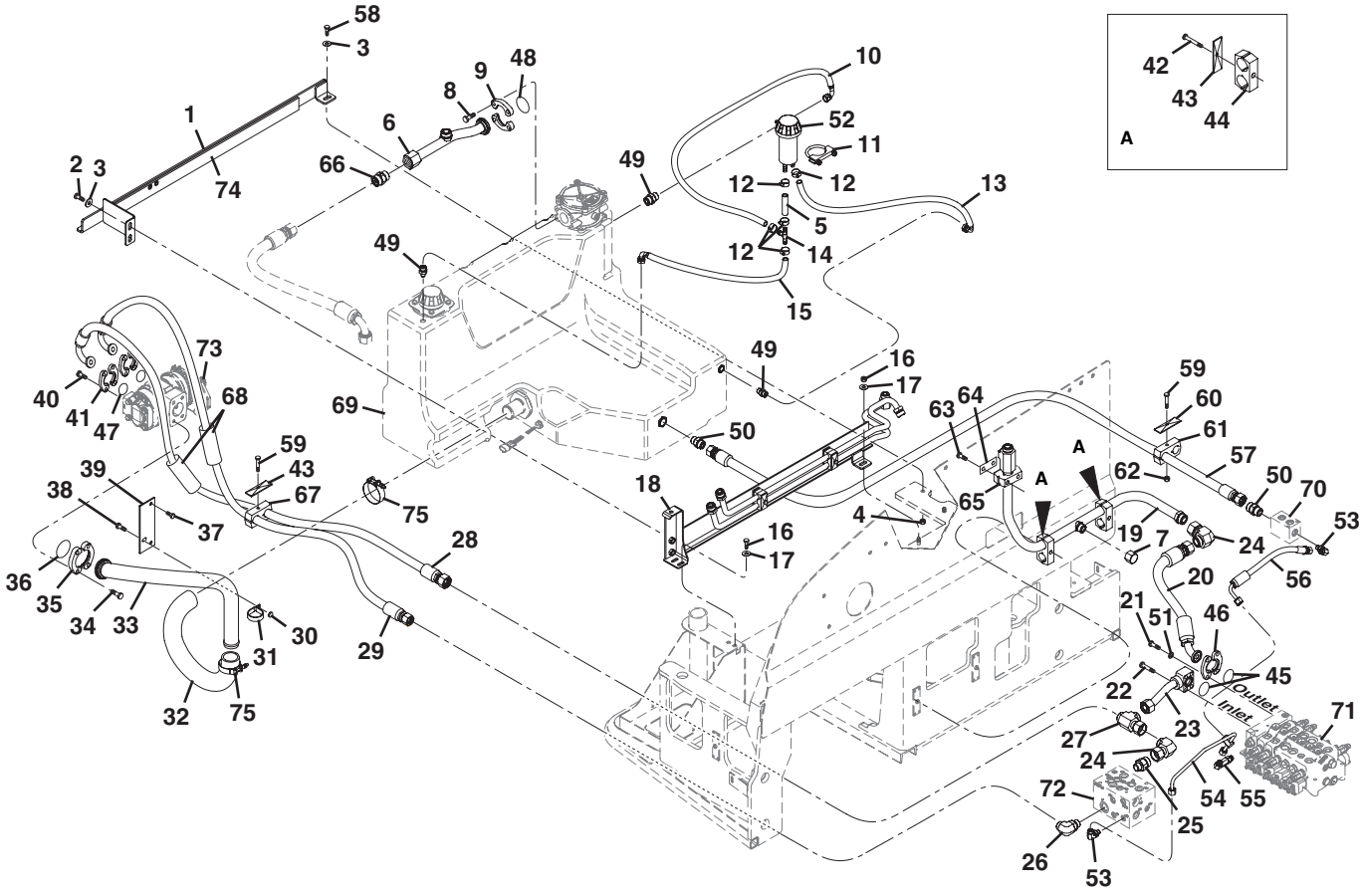

Figure 8-1 Pump, Suction & Return

Item	Part Number	Qty.	Description	Rev.
1	7301772	1	HYDRAULIC TANK SUPPORT BRACKET ASSY, (includes item 74)	
2	8303790	2	HEX HD CAPSCREW, M12-1.75X30mm, PC8.8	
3	8307220	4	FLAT WASHER, M12	
4	8305044	2	HEX NUT, M12-1.75	
5	2717029	1	SPECIAL HOSE	
6	7300484	1	TUBE ASSY	
7	2170912	1	CAP	
8	8310414	4	HEX HD CAPSCREW, 1/2-13X1-1/2, GR8	
9	8530036	2	FLANGE HALF	
10	2717031	1	SPECIAL HOSE	
11	8275212	1	MUFFLER CLAMP, 2-1/2" U TYPE	
12	8410009	5	HOSE CLAMP, TYPE F	
13	2717032	1	SPECIAL HOSE	
14	8430099	1	BARBED HOSE TEE, FOR 1/2 ID HOSE	
15	2717030	1	SPECIAL HOSE	
16	8303798	2	HEX HD CAPSCREW, M10-1.5X25mm, PC8.8	
17	8307221	2	FLAT WASHER, M10	
18		Ref	HYDRAULIC TANK RETAINER ASSY, (see Figure 8-12 for details)	
19	7300732	1	TUBE ASSY	
20	2716934	1	HOSE ASSY	
21	8303675	4	HEX HD CAPSCREW, 3/8-16X1-1/4	
22	8303622	4	HEX HD CAPSCREW, 3/8-16X2.00	
23	7300998	1	TUBE ASSY	
24	2172116	2	ELBOW, 90 DEGREES, (swivel nut)	
25	2111612	1	CONNECTOR	
26	2131212	1	ELBOW, 90 DEGREES	
27	8770214	1	SWIVEL RUN TEE	
28	2716937	1	HOSE ASSY	
29	2716936	1	HOSE ASSY	
30	8305654	1	HEX LOCKNUT, M8X1.25	
31	8410001	1	TUBE CLIP, 2.0	
32	2716911	1	SPECIAL HOSE	
33	7300485	1	TUBE ASSY	
34	8303626	4	HEX HD CAPSCREW, 1/2-13X1-1/2	
35	8546407	2	FLANGE HALF	
36	8640208	1	O-RING	
37	8303784	2	HEX HD CAPSCREW, M10-1.5X20mm, PC8.8	
38	8310623	1	CARRIAGE BOLT, M8-1.25X25mm, PC8.8	
39	7300969	1	TUBE CLAMP BRACKET	
40	8303675	8	HEX HD CAPSCREW, 3/8-16X1-1/4	
41	8530035	4	FLANGE HALF	
42	8303550	2	HEX HD CAPSCREW, M8-1.25X60mm, PC8.8	
43	8750025	3	TWIN CLAMP COVER	
44	8750022	2	CLAMP	
45	8640123	2	O-RING	
46	8530030	2	FLANGE HALF	
47	8630008	2	O-RING	
48	8630009	1	O-RING	
49	2110808	3	CONNECTOR	

Figure 8-1 Pump, Suction & Return (Continued)

Item	Part Number	Qty.	Description	Rev.
50	2111212	2	CONNECTOR	
51	8307005	4	LOCKWASHER, 3/8	
52	7139980	1	BREATHER ASSY	
53	2130606	2	ELBOW, 90 DEGREES	
54	7301030	1	UNFILTERED TEE TUBE ASSY	
55	8770154	1	ELBOW, 90 DEGREES	
56	2716974	1	HOSE ASSY	
57	2717204	1	HOSE ASSY	
58	8310164	1	HEX HD CAPSCREW, M12-1.75X40mm, PC8.8	
59	8303528	2	HEX HD CAPSCREW, M8-1.25X65mm, PC8.8, **(S/N 19483 thru 20118 & 0160002519 & After)**	
60	8750025	1	TWIN CLAMP COVER, **(S/N 19483 thru 20118 & 0160002519 & After)**	
61	8750022	1	TWIN CLAMP SET, 1.26 DIA, **(S/N 19483 thru 20118 & 0160002519 & After)**	
62	8750043	1	RAIL NUT, M8	
63	8303703	2	HEX HD CAPSCREW, 1/4-20X2-1/2, GR5	
64	8750001	1	SINGLE COVER PLATE	
65	8750005	1	SINGLE CLAMP SET, 1.25 DIA	
66	8902856	1	CHECK VALVE, 1	
67	8750024	1	TWIN CLAMP SET, 1.10 DIA	
68	7139983	2	SPLIT TYPE CONDUIT, 2 IDX8	
69		Ref	HYDRAULIC RESERVOIR, (see Figure 9-17 for details)	
70		Ref	MANIFOLD, (see Figure 8-2 for details)	
71		Ref	MAIN CONTROL VALVE, (see Figure 9-9 for details)	
72		Ref	ACCUMULATOR CHARGE VALVE, (see Figure 9-12 for details)	
73		Ref	GEAR PUMP, (see Figure 9-8 for details)	
74	8581036	1	FOAM STRIP	
75	8405209	2	T-BOLT CLAMP	

Figure 8-1 Pump, Suction & Return (Continued)

Item	Part Number	Qty.	Description	Rev.

Figure 8-1 Pump, Suction & Return

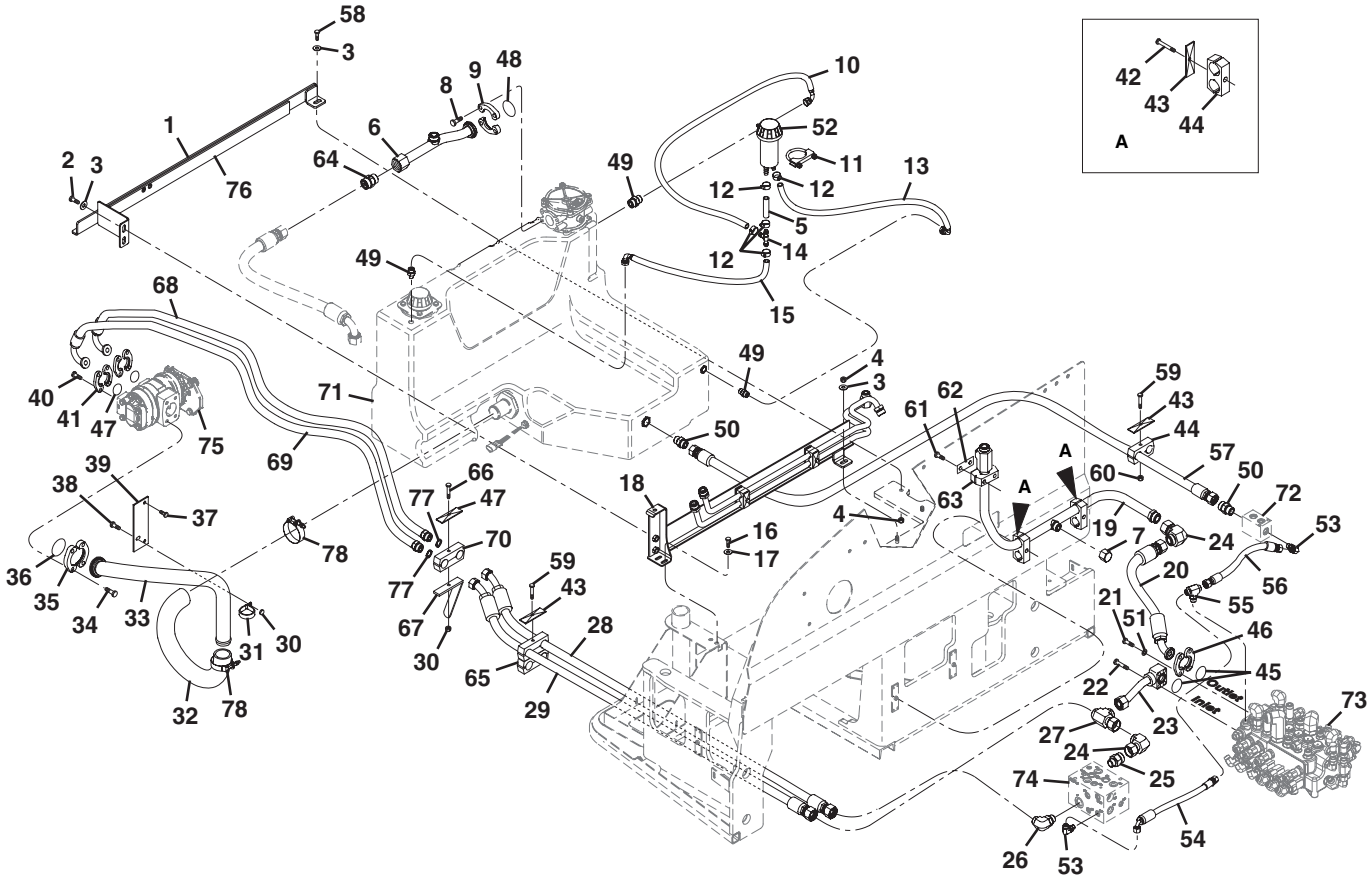

PU2581

Figure 8-1 Pump, Suction & Return

Item	Part Number	Qty.	Description	Rev.
1	7301772	1	HYDRAULIC TANK SUPPORT BRACKET ASSY, (includes item 76)	
2	8303790	2	HEX HD CAPSCREW, M12-1.75X30mm, PC8.8	
3	8307220	4	PLAIN WASHER, M12	
4	8305044	2	HEX NUT, M12-1.75	
5	2717029	1	SPECIAL HOSE	
6	3460440	1	TUBE ASSY	
7	2170912	1	CAP	
8	8310414	4	HEX HD CAPSCREW, 1/2-13X1-1/2, GR8	
9	8530036	2	FLANGE HALF	
10	2717031	1	SPECIAL HOSE	
11	8275212	1	MUFFLER CLAMP, 2-1/2 U TYPE	
12	8410009	5	HOSE CLAMP, TYPE F	
13	2717032	1	SPECIAL HOSE	
14	8430099	1	BARBED HOSE TEE, 1/2 ID HOSE	
15	2717030	1	SPECIAL HOSE	
16	8303798	2	HEX HD CAPSCREW, M10-1.5X25mm, PC8.8	
17	8307221	2	FLAT WASHER, M10	
18		Ref	HYDRAULIC TANK RETAINER ASSY, (see Figure 8-12 for details)	
19	7300732	1	TUBE ASSY	
20	2716934	1	HOSE ASSY	
21	8303675	4	HEX HD CAPSCREW, 3/8-16X1-1/4	
22	8303622	4	HEX HD CAPSCREW, 3/8-16X2.00	
23	7301843	1	TUBE ASSY	
24	2172116	2	ELBOW, 90 DEGREES, (swivel nut)	
25	2111612	1	CONNECTOR	
26	2131212	1	ELBOW, 90 DEGREES	
27	2170716	1	SWIVEL RUN TEE	
28	2717289	1	HOSE ASSY	
29	2717288	1	HOSE ASSY	
30	8305654	2	HEX LOCKNUT, M8X1.25	
31	8410001	1	TUBE CLIP, 2.0	
32	2716911	1	SPECIAL HOSE	
33	7300485	1	TUBE ASSY	
34	0641811	4	HEX HD CAPSCREW, 1/2-13X1-3/8	
35	10717672	2	FLANGE HALF	
36	8640208	1	O-RING	
37	8303784	2	HEX HD CAPSCREW, M10-1.5X20mm, PC8.8	
38	8310623	1	CARRIAGE BOLT, M8-1.25X25mm, PC8.8	
39	7300969	1	TUBE CLAMP BRACKET	
40	8303675	8	HEX HD CAPSCREW, 3/8-16X1-1/4	
41	8530035	4	FLANGE HALF	
42	8303550	2	HEX HD CAPSCREW, M8-1.25X60mm, PC8.8	
43	8750025	5	TWIN CLAMP COVER	
44	8750022	3	CLAMP	
45	8640123	2	O-RING	
46	8530030	2	FLANGE HALF	
47	8630008	2	O-RING	
48	8630009	1	O-RING	
49	2110808	3	CONNECTOR, (torque to 25-40 lb-ft)	

Figure 8-1 Pump, Suction & Return (Continued)

Item	Part Number	Qty.	Description	Rev.
50	2111212	2	CONNECTOR, (torque to 25-40 lb-ft)	
51	8307005	4	LOCKWASHER, 3/8	
52	7139980	1	BREATHER ASSY	
53	2130606	2	ELBOW, 90 DEGREES	
54	2717194	1	HOSE ASSY	
55	2170406	1	BRANCH TEE	
56	2717193	1	HOSE ASSY	
57	2717204	1	HOSE ASSY	
58	8310164	1	HEX HD CAPSCREW, M12-1.75X40mm, PC8.8	
59	8303528	2	HEX HD CAPSCREW, M8-1.25X65mm, PC8.8, **(S/N 19483 thru 20118 & 0160002519 & After)**	
60	8750043	1	RAIL NUT, M8	
61	8303703	2	HEX HD CAPSCREW, 1/4-20X2-1/2, GR5	
62	8750001	1	SINGLE COVER PLATE	
63	8750005	1	SINGLE CLAMP SET, 1.25 DIA	
64	8902856	1	CHECK VALVE, 1	
65	8750024	1	TWIN CLAMP SET, 1.10 DIA	
66	8310030	1	HEX HD CAPSCREW, M8X1.25X80mm, PC8.8	
67	0903071	1	HYDRAULIC TUBE HOLD BRACKET	
68	7301873	1	PUMP TUBE ASSY, (includes item 77)	
69	7301874	1	PUMP TUBE ASSY, (includes item 77)	
70	1321136	1	TWIN CLAMP SET	
71		Ref	HYDRAULIC RESERVOIR, (see Figure 9-17 for details)	
72		Ref	MANIFOLD, (see Figure 8-2 for details)	
73		Ref	MAIN CONTROL VALVE, (see Figure 9-9 for details)	
74		Ref	ACCUMULATOR CHARGE VALVE, (see Figure 9-12 for details)	
75		Ref	GEAR PUMP, (see Figure 9-8 for details)	
76	8581036	1	FOAM STRIP	
77	8630006	2	O-RING	
78	8405209	2	T-BOLT CLAMP	

Figure 8-1 Pump, Suction & Return (Continued)

Item	Part Number	Qty.	Description	Rev.

Figure 8-2 Service & Parking Brake

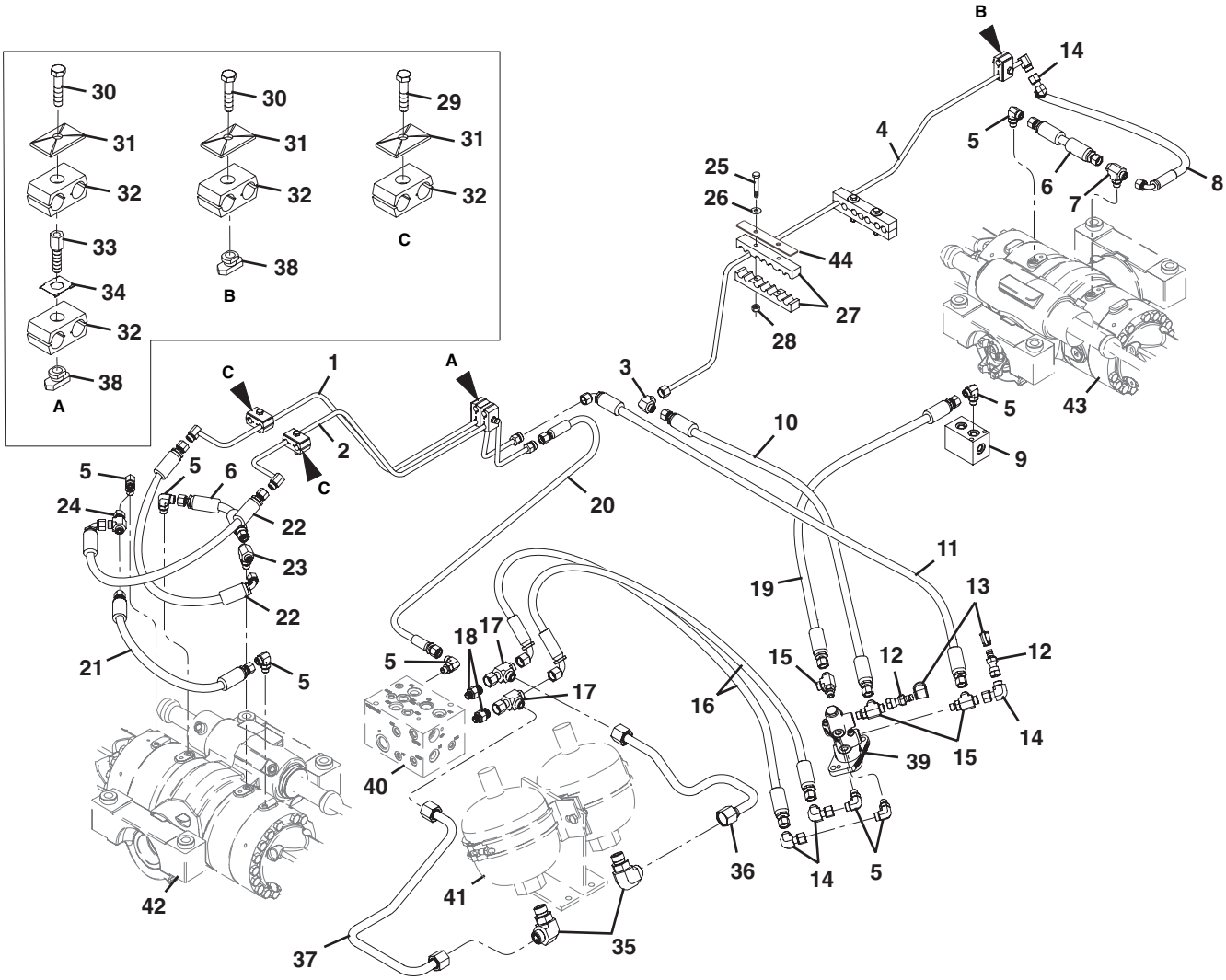

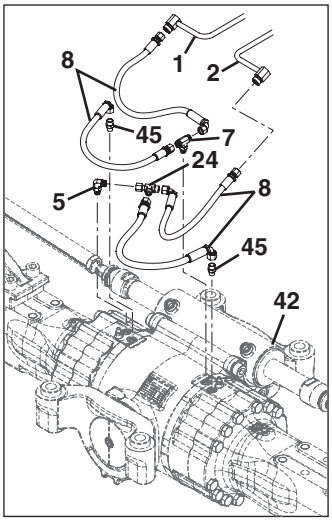

644-E S/N 0160036724, 0160036811,
0160036907 & 0160037012
944-E S/N 0160034634, 0160036710,
0160036722, 0160036735 & 0160036738

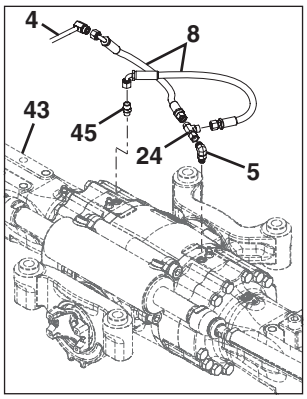

644-E S/N 0160036724, 0160036811,
0160036907 & 0160037012
944-E S/N 0160034634, 0160036710,
0160036722, 0160036735 & 0160036738

PU2594

Figure 8-2 Service & Parking Brake

Item	Part Number	Qty.	Description	Rev.
1	7300947	1	SERVICE BRAKES TUBE ASSY	
2	7300945	1	PARK BRAKE TUBE ASSY	
3	2172006	1	UNION ELBOW, 90 DEGREES	
4	7300757	1	REAR BRAKES TUBE ASSY	
5	2130606	8	ELBOW, 90 DEGREES, **(644-E excluding S/N 0160036724, 0160036811, 0160036907 & 0160037012)**, **(944-E excluding S/N 0160034634, 0160036710, 0160036722, 0160036735 & 0160036738)**	
	2130606	6	ELBOW, 90 DEGREES, **(644-E S/N 0160036724, 0160036811, 0160036907 & 0160037012)**, **(944-E S/N 0160034634, 0160036710, 0160036722, 0160036735 & 0160036738)**	
6	2716922	2	HOSE ASSY	
7	2170406	1	BRANCH TEE, **(644-E excluding S/N 0160036724, 0160036811, 0160036907 & 0160037012)**, **(944-E excluding S/N 0160034634, 0160036710, 0160036722, 0160036735 & 0160036738)**	
	2170406	2	BRANCH TEE, **(644-E S/N 0160036724, 0160036811, 0160036907 & 0160037012)**, **(944-E S/N 0160034634, 0160036710, 0160036722, 0160036735 & 0160036738)**	
8	2717067	1	HOSE ASSY, **(644-E excluding S/N 0160036724, 0160036811, 0160036907 & 0160037012)**, **(944-E excluding S/N 0160034634, 0160036710, 0160036722, 0160036735 & 0160036738)**	
	2717067	4	HOSE ASSY, **(644-E S/N 0160036724, 0160036811, 0160036907 & 0160037012)**, **(944-E S/N 0160034634, 0160036710, 0160036722, 0160036735 & 0160036738)**	
9	7300778	1	MANIFOLD	
10	2717038	1	HOSE ASSY	
11	2716939	1	HOSE ASSY	
12	8430081	2	DIAGNOSTIC ADAPTER	
13	8430032	2	DUST PLUG	
14	2172106	4	ELBOW, 90 DEGREES, (swivel nut)	
15	2170306	3	RUN TEE	
16	2716951	2	HOSE ASSY	
17	2170708	2	SWIVEL RUN TEE	
18	2110806	2	CONNECTOR	
19	2716952	1	HOSE ASSY	
20	2716938	1	HOSE ASSY	
21	2716923	1	HOSE ASSY	
22	2716924	2	HOSE ASSY	
23	2170406	1	BRANCH TEE	
24	2170706	1	SWIVEL RUN TEE, **(644-E excluding S/N 0160036724, 0160036811, 0160036907 & 0160037012)**, **(944-E excluding S/N 0160034634, 0160036710, 0160036722, 0160036735 & 0160036738)**	
	2170706	3	SWIVEL RUN TEE, **(644-E S/N 0160036724, 0160036811, 0160036907 & 0160037012)**, **(944-E S/N 0160034634, 0160036710, 0160036722, 0160036735 & 0160036738)**	
25	8303550	4	HEX HD CAPSCREW, M8-1.25X60mm, PC8.8	
26	8307204	4	PLAIN WIDE WASHER, .375-.438-1.000	
27	7300750	2	MULTIPLE TUBE CLAMP SET	
28	8305638	4	HEX LOCKNUT, M8-1.25	
29	8310293	2	HEX HD CAPSCREW, M8-1.25X50mm, PC8.8, (single clamp)	
30	8310476	2	HEX HD CAPSCREW, M8-1.25X35mm, PC8.8, (double clamp)	
31	8769123	4	TWIN COVER PLATE	

Figure 8-2 Service & Parking Brake (Continued)

Item	Part Number	Qty.	Description	Rev.
32	8750042	5	TWIN CLAMP SET, 0.50/0.38	
33	8750037	1	STACKING BOLT	
34	8750017	1	LOCKING PLATE	
35	2130808	2	ELBOW, 90 DEGREES	
36	7300999	1	TUBE ASSY	
37	7301001-OM	1	TUBE ASSY	
38	8750043	2	RAIL NUT, M8	
39		Ref	BRAKE VALVE, (see Figure 7-1 for details)	
40		Ref	ACCUMULATOR CHARGE VALVE, (see Figure 9-12 for details)	
41		Ref	ACCUMULATORS, (see Figure 9-18 for details)	
42		Ref	FRONT AXLE, (see Figure 5-2 for details)	
43		Ref	REAR AXLE, (see Figure 5-10 for details)	
44	1321733	2	CLAMP COVER PLATE, **(644E S/N 0160028387 & After), (944E S/N 0160028385 & After)**	
45	2110806	2	CONNECTOR, **(644-E S/N 0160036724, 0160036811, 0160036907 & 0160037012)**, **(944-E S/N 0160034634, 0160036710, 0160036722, 0160036735 & 0160036738)**	

Figure 8-2 Service & Parking Brake (Continued)

Item	Part Number	Qty.	Description	Rev.

Figure 8-3 Extend/Retract & Lift/Lower

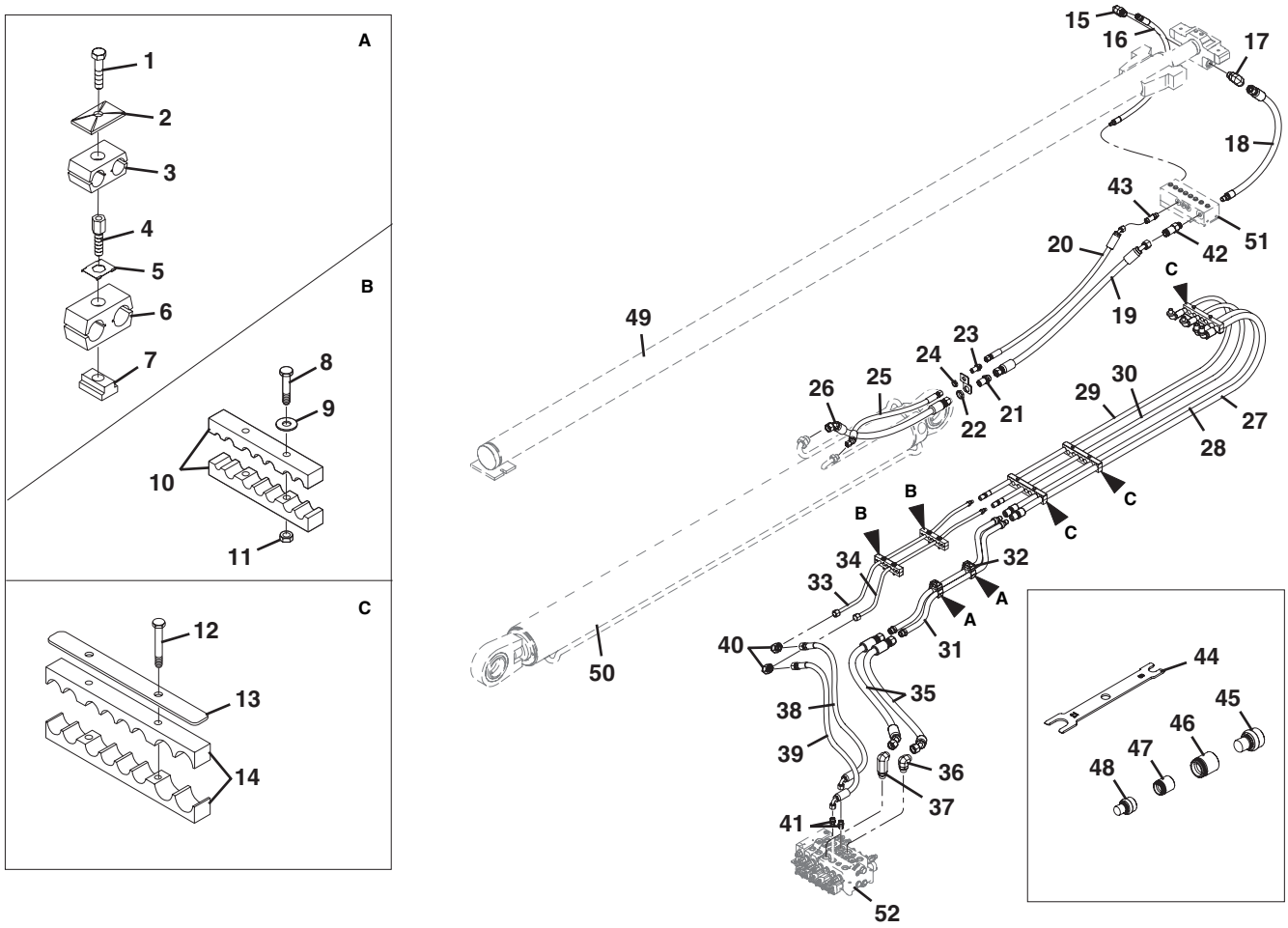

Figure 8-3 Extend/Retract & Lift/Lower

Item	Part Number	Qty.	Description	Rev.
1	8310476	2	HEX HD CAPSCREW, M8X1.25X35mm, PC8.8	
2	8769123	2	TWIN COVERPLATE	
3	8769126	2	TWIN CLAMP SET, .50 DIA	
4	8750038	2	STACKING BOLT	
5	8750017	2	TWIN CLAMP LOCKING PLATE	
6	8769127	2	TWIN CLAMP SET, 1.00 DIA	
7	8750043	2	RAIL NUT, M8 THREAD	
8	8303550	4	HEX HD CAPSCREW, M8X1.25X60mm, PC8.8	
9	8307204	4	PLAIN WIDE WASHER, 3/8	
10	7300750	2	SPECIAL TUBE CLAMP	
11	8305638	4	HEX LOCKNUT, M8X1.25	
12	8303550	6	HEX HD CAPSCREW, M8X1.25X60mm, PC8.8	
13	7300927	3	CLAMP COVER	
14	7300618	3	SPECIAL HOSE CLAMP	
15	2130812	1	ELBOW, 90 DEGREES	
16	2716986	1	HOSE ASSY	
17	2131212	1	ELBOW, 90 DEGREES	
18	2716989	1	HOSE ASSY	
19	2717146	1	HOSE ASSY	
20	2717147	1	HOSE ASSY	
21	8770300	1	BULKHEAD CONNECTOR	
22	8770085	1	BULKHEAD NUT	
23	8770299	1	BULKHEAD CONNECTOR	
24	8770129	1	BULKHEAD NUT	
25	2717144	1	HOSE ASSY	
26	2717145	1	HOSE ASSY	
27	2717069	1	SPECIAL HOSE	
28	2716997	1	HOSE ASSY	
29	2717070	1	SPECIAL HOSE	
30	2716998	1	HOSE ASSY	
31	7300737	1	HOIST CYLINDER EXTEND TUBE ASSY	
32	7300738	1	BOOM CYLINDER EXTEND TUBE ASSY	
33	7300741	1	BOOM CYLINDER RETRACT TUBE ASSY	
34	7300744	1	HOIST CYLINDER RETRACT TUBE ASSY	
35	2716940	2	HOSE ASSY	
36	2131212	1	ELBOW, 90 DEGREES	
37	8770282	1	TUBE ELBOW	
38	2717063	1	HOSE ASSY	
39	2717064	1	HOSE ASSY	
40	2172010	2	UNION ELBOW, 90 DEGREES	
41	2110810	2	CONNECTOR	
42	8770163	1	CONNECTOR	
43	8770117	1	CONNECTOR	
44	7301438	2	STC HOSES 8-12 SERVICE TOOL	
45	7301666	2	12 STC MALE PLUG	
46	7301667	2	12 STC FEMALE CAP	
47	7301663	6	8 STC FEMALE CAP	
48	7301662	6	8 STC MALE PLUG	
49		Ref	EXTEND CYLINDER, (see Figure 9-1 for details)	

Figure 8-3 Extend/Retract & Lift/Lower (Continued)

Item	Part Number	Qty.	Description	Rev.
50		Ref	LIFT CYLINDER, (see Figure 9-2 for details)	
51		Ref	HYDRAULIC JUNCTION MANIFOLD, (see Figure 8-4 for details)	
52		Ref	MAIN CONTROL VALVE, (see Figure 9-9 for details)	
	8024045	1	STC HOSE CONNECTIONS SERVICE KIT, (includes items 44 thru 48)	

Figure 8-3 Extend/Retract & Lift/Lower (Continued)

Item	Part Number	Qty.	Description	Rev.

Figure 8-3 Extend/Retract & Lift/Lower

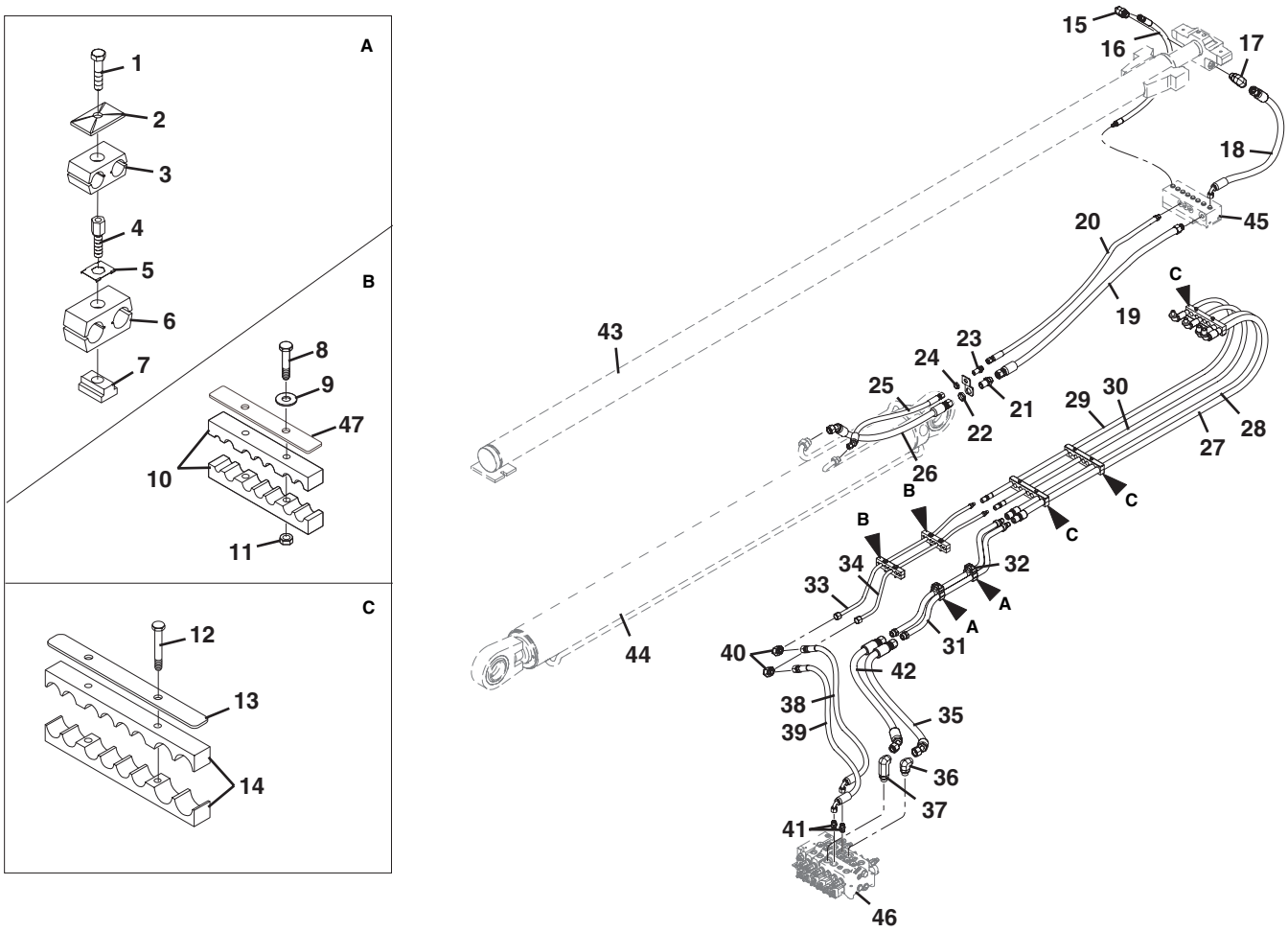

Figure 8-3 Extend/Retract & Lift/Lower

Item	Part Number	Qty.	Description	Rev.
1	8310476	2	HEX HD CAPSCREW, M8X1.25X35mm, PC8.8	
2	8769123	2	TWIN COVERPLATE	
3	8769126	2	TWIN CLAMP SET, .50 DIA	
4	8750038	2	STACKING BOLT	
5	8750017	2	TWIN CLAMP LOCKING PLATE	
6	8769127	2	TWIN CLAMP SET, 1.00 DIA	
7	8750043	2	RAIL NUT, M8 THREAD	
8	8303550	4	HEX HD CAPSCREW, M8X1.25X60mm, PC8.8	
9	8307204	4	PLAIN WIDE WASHER, 3/8	
10	7300750	2	SPECIAL TUBE CLAMP	
11	8305638	4	HEX LOCKNUT, M8X1.25	
12	8303550	6	HEX HD CAPSCREW, M8X1.25X60mm, PC8.8	
13	7300927	3	CLAMP COVER	
14	7300618	3	SPECIAL HOSE CLAMP	
15	2130812	1	ELBOW, 90 DEGREES	
16	2717277	1	HOSE ASSY	
17	2131212	1	ELBOW, 90 DEGREES	
18	2717278	1	HOSE ASSY	
19	2717269	1	HOSE ASSY, **(644E S/N 0160003604 thru 0160017700), (944E S/N 0160003602 thru 0160017948)**	
	2717146	1	HOSE ASSY, **(644E S/N 0160017701 thru 0160018574), (944E S/N 0160017949 thru 0160018576)**	
	2717269	1	HOSE ASSY, **(644E S/N 0160018578 & After), (944E S/N 0160018633 & After)**	
20	2717270	1	HOSE ASSY, **(644E S/N 0160003604 thru 0160017700), (944E S/N 0160003602 thru 0160017948)**	
	2717147	1	HOSE ASSY, **(644E S/N 0160017701 thru 0160018574), (944E S/N 0160017949 thru 0160018576)**	
	2717270	1	HOSE ASSY, **(644E S/N 0160018578 & After), (944E S/N 0160018633 & After)**	
21	8770300	1	BULKHEAD CONNECTOR, **(644E S/N 0160003604 thru 0160018889), (944E S/N 0160003602 thru 0160018893)**	
	2171112	1	BULKHEAD CONNECTOR, **(644E S/N 0160018896 thru 0160029351), (944E S/N 0160018899 thru 0160029352)**	
22	8770085	1	BULKHEAD NUT, **(644E S/N 0160003604 thru 0160029351), (944E S/N 0160003602 thru 0160029352)**	
23	8770299	1	BULKHEAD CONNECTOR, **(644E S/N 0160003604 thru 0160018889), (944E S/N 0160003602 thru 0160018893)**	
	2171108	1	BULKHEAD CONNECTOR, **(644E S/N 0160018896 thru 0160029351), (944E S/N 0160018899 thru 0160029352)**	
24	8770129	1	BULKHEAD NUT, **(644E S/N 0160003604 thru 0160029351), (944E S/N 0160003602 thru 0160029352)**	
25	2717271	1	HOSE ASSY, **(644E S/N 0160003604 thru 0160017700), (944E S/N 0160003602 thru 0160017948)**	
	2717144	1	HOSE ASSY, **(644E S/N 0160017701 & After), (944E S/N 0160017949 & After)**	
26	2717273	1	HOSE ASSY, **(644E S/N 0160003604 thru 0160017700), (944E S/N 0160003602 thru 0160017948)**	
	2717145	1	HOSE ASSY, **(644E S/N 0160017701 & After), (944E S/N 0160017949 & After)**	
27	2717267	1	SPECIAL HOSE	
28	2717268	1	HOSE ASSY	
29	2717266	1	SPECIAL HOSE	
30	2717265	1	HOSE ASSY	

Figure 8-3 Extend/Retract & Lift/Lower

Item	Part Number	Qty.	Description	Rev.
31	7300737	1	HOIST CYL. EXT. TUBE ASSY	
32	7300738	1	BOOM CYL. EXT. TUBE ASSY	
33	7300741	1	BOOM CYL. RETRACT TUBE ASSY	
34	7300744	1	HOIST CYL. RETRACT TUBE ASSY	
35	2716940	1	HOSE ASSY	
36	2131212	1	ELBOW, 90 DEGREES	
37	2170212	1	TUBE ELBOW	
38	2717063	1	HOSE ASSY	
39	2717064	1	HOSE ASSY	
40	2172010	2	UNION ELBOW, 90 DEGREES	
41	2110810	2	CONNECTOR	
42	2717384	1	HOSE ASSY	
43		Ref	EXTEND CYLINDER, (see Figure 9-1 for details)	
44		Ref	LIFT CYLINDER, (see Figure 9-2 for details)	
45		Ref	HYDRAULIC JUNCTION MANIFOLD, (see Figure 8-4 for details)	
46		Ref	MAIN CONTROL VALVE, (see Figure 9-9 for details)	
47	1321733	2	CLAMP COVER PLATE, **(644E S/N 0160028387 & After), (944E S/N 0160028385 & After)**	

Figure 8-3 Extend/Retract & Lift/Lower

Item	Part Number	Qty.	Description	Rev.

Figure 8-4 Attachment Tilt & Auxiliary

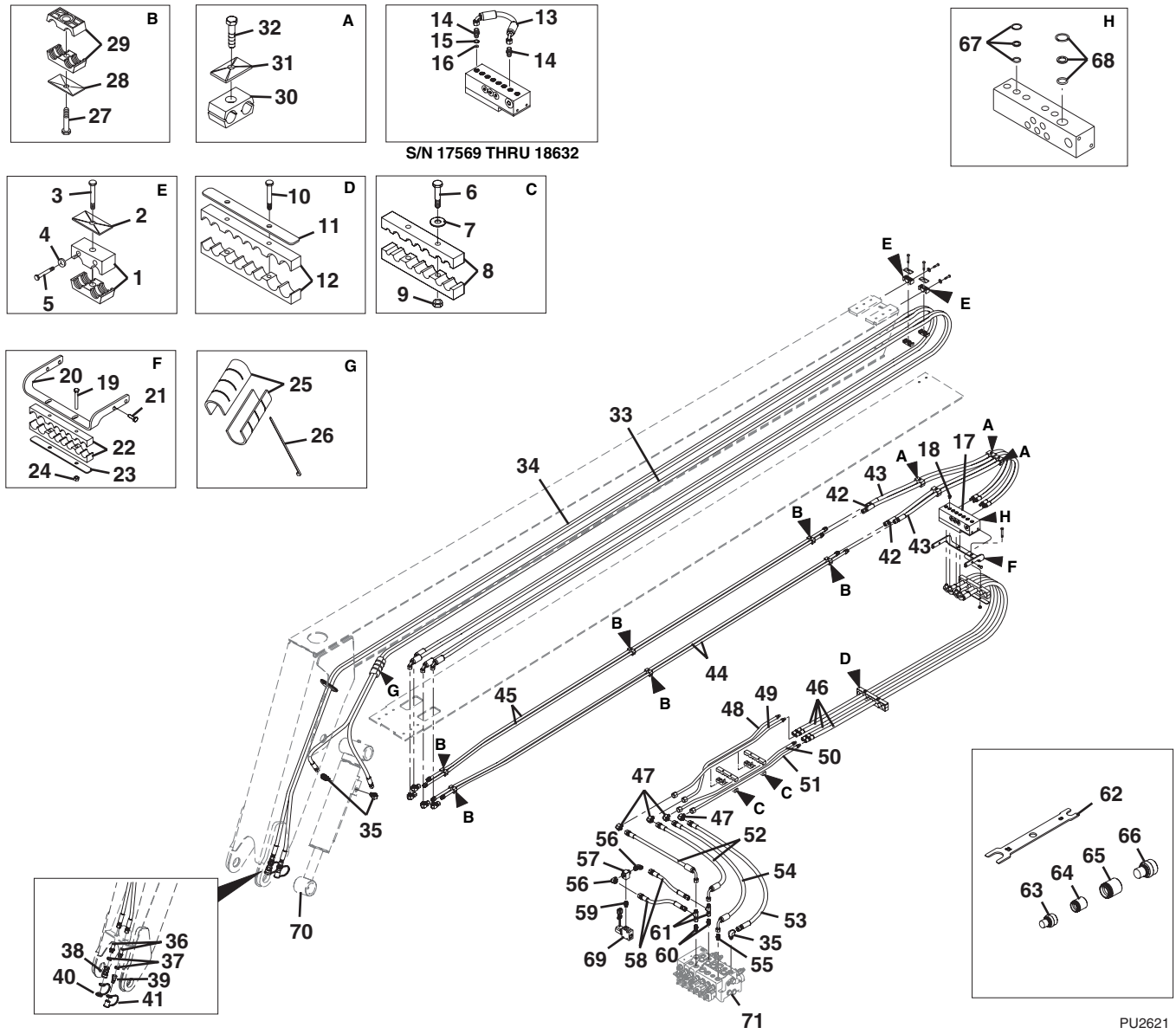

Figure 8-4 Attachment Tilt & Auxiliary

Item	Part Number	Qty.	Description	Rev.
1	7300567	2	HOSE CLAMP	
2	8769123	2	TWIN COVERPLATE	
3	8310028	2	HEX HD CAPSCREW, M8-1.25X70mm, PC8.8	
4	8307109	4	PLAIN NARROW WASHER, .250	
5	8310703	4	HEX HD CAPSCREW, M6-1X45mm, PC8.8	
6	8303550	4	HEX HD CAPSCREW, M8-1.25X60mm, PC8.8	
7	8307204	4	PLAIN WIDE WASHER, 3/8	
8	7300750	2	SPECIAL TUBE CLAMP	
9	8305638	4	HEX LOCKNUT, M8-1.25	
10	8303550	2	HEX HD CAPSCREW, M8-1.25X60mm, PC8.8	
11	7300927	1	CLAMP COVER	
12	7300618	1	HOSE CLAMP	
13	2717115	1	SPECIAL HOSE, **(S/N 17569 thru 18632)**	
14	2110604	2	CONNECTOR	
15	8630003	1	O-RING, .360 I.D.	
16	7139918	1	ORIFICE DISK, .039 DIA	
17	7301072	1	HYDRAULIC JUNCTION MANIFOLD	
18	7301301	AR	PRESSURE BLEED PLUG, (6 Required on **S/N 17567 thru 18632**), (8 Required on **S/N 18633 & After**)	
19	8310028	2	HEX HD CAPSCREW, M8-1.25X70mm, PC8.8	
20	7301154	1	HOSE CLAMP MOUNTING BRACKET	
21	8303783	4	HEX HD CAPSCREW, M8-1.25X25mm, PC8.8	
22	7300618	1	HOSE CLAMP	
23	7300927	1	CLAMP COVER	
24	8305043	2	NUT, M8-1.25	
25	7301536	2	HOSE GUARD	
26	8584003	3	TY-RAP	
27	8310476	6	HEX HD CAPSCREW, M8-1.25X35mm, PC8.8	
28	8769123	6	TWIN COVERPLATE	
29	8769122	6	TWIN CLAMP SET, .625 DIA	
30	8750027	4	TWIN CLAMP SET, .84 DIA	
31	8769128	4	TWIN COVERPLATE	
32	8310293	4	HEX HD CAPSCREW, M8-1.25X50mm, PC8.8	
33	2717175	1	ATTACHMENT TILT TWINLINE HOSE	
34	2717176	1	AUXILIARY TWINLINE HOSE	
35	2130808	3	ELBOW, 90 DEGREES	
36	8770136	2	BULKHEAD CONNECTOR	
37	8770129	2	BULKHEAD NUT	
38	91403413	1	FEMALE QUICK-DISCONNECT COUPLER	
39	91403414	1	MALE QUICK-DISCONNECT NIPPLE	
40	8420055	1	DUST PLUG, FOR QUICK-DISCONNECT	
41	8420053	1	DUST CAP, FOR QUICK-DISCONNECT	
42	2717192	2	HOSE ASSY	
43	2717191	2	HOSE ASSY	
44	7301641	2	COMMON BOOM TUBE ASSY, (left side)	
45	7301642	2	COMMON BOOM TUBE ASSY, (right side)	
46	2716998	4	HOSE ASSY	
47	2172010	4	UNION ELBOW, 90 DEGREES	
48	7300742	1	AUXILIARY TUBE ASSY, PORT F	

Figure 8-4 Attachment Tilt & Auxiliary (Continued)

Item	Part Number	Qty.	Description	Rev.
49	7300743	1	AUXILIARY TUBE ASSY, PORT M	
50	7300745	1	CYLINDER TUBE ASSY, (extend)	
51	7300746	1	CYLINDER TUBE ASSY, (retract)	
52	2717062	2	HOSE ASSY	
53	2717065	1	HOSE ASSY	
54	2717066	1	HOSE ASSY	
55	2110808	1	CONNECTOR	
56	2130606	2	ELBOW, 90 DEGREES	
57	8902175	1	VALVE SHUTTLE	
58	2717118	2	HOSE ASSY	
59	8770152	1	UNION	
60	8770117	2	CONNECTOR	
61	8770125	2	SWIVEL RUN TEE	
62	7301438	2	STC HOSES 8-12 SERVICE TOOL	
63	7301666	2	12 STC MALE PLUG	
64	7301667	2	12 STC FEMALE CAP	
65	7301663	6	8 STC FEMALE CAP	
66	7301662	6	8 STC MALE PLUG	
67	7020368	16	STC PORT REPAIR SERVICE KIT, (port size - 08), (includes retaining ring, back-up ring & o-ring)	
68	7020369	4	STC PORT REPAIR SERVICE KIT, (port size -12), (includes retaining ring, back-up ring & o-ring)	
69		Ref	AUX. PRESS. DUMP VALVE SOLENOID, (see Figure 9-14 for details)	
70		Ref	ATTACHMENT TILT CYLINDER, (see Figure 9-3 for details)	
71		Ref	MAIN CONTROL VALVE, (see Figure 9-9 for details)	
	8024045	1	STC HOSE CONNECTIONS SERVICE KIT, (includes items 62 thru 66)	

Figure 8-4 Attachment Tilt & Auxiliary (Continued)

Item	Part Number	Qty.	Description	Rev.

Figure 8-4 Attachment Tilt & Auxiliary

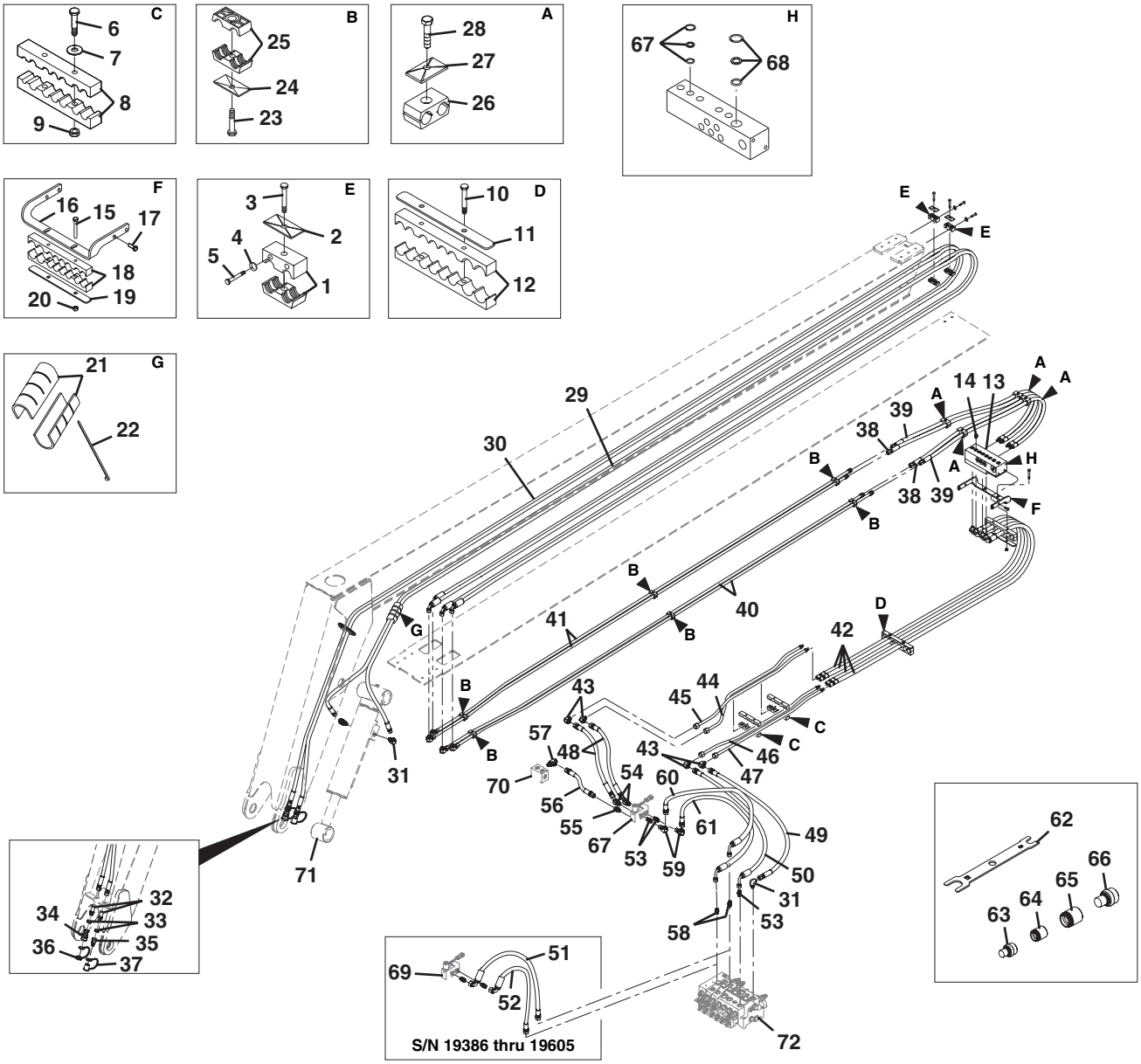

PU2630

Figure 8-4 Attachment Tilt & Auxiliary

Item	Part Number	Qty.	Description	Rev.
1	7300567	2	HOSE CLAMP	
2	8769123	2	TWIN COVERPLATE	
3	8310028	2	HEX HD CAPSCREW, M8-1.25X70mm, PC8.8	
4	8307109	4	PLAIN NARROW WASHER, .250	
5	8310703	4	HEX HD CAPSCREW, M6-1X45 mm, PC8.8	
6	8303550	4	HEX HD CAPSCREW, M8-1.25X60mm, PC8.8	
7	8307204	4	PLAIN WIDE WASHER, 3/8	
8	7300750	2	SPECIAL TUBE CLAMP	
9	8305638	4	HEX LOCKNUT, M8-1.25	
10	8303550	2	HEX HD CAPSCREW, M8-1.25X60mm, PC8.8	
11	7300927	1	CLAMP COVER	
12	7300618	1	HOSE CLAMP	
13	7301072	1	HYDRAULIC JUNCTION MANIFOLD	
14	7301301	AR	PRESSURE BLEED PLUG,(6 Required on **S/N 17567 thru 18632**), (8 Required on **S/N 18633 & After**)	
15	8310028	2	HEX HD CAPSCREW, M8-1.25X70mm, PC8.8	
16	7301154	1	HOSE CLAMP MOUNTING BRACKET	
17	8303783	4	HEX HD CAPSCREW, M8-1.25X25mm, PC8.8	
18	7300618	1	HOSE CLAMP	
19	7300927	1	CLAMP COVER	
20	8305043	2	NUT, M8-1.25	
21	7301536	2	HOSE GUARD	
22	8584003	2	TY-RAP	
23	8310476	6	HEX HD CAPSCREW, M8-1.25X35mm, PC8.8	
24	8769123	6	TWIN COVERPLATE	
25	8769122	6	TWIN CLAMP SET, .625 DIA	
26	8750027	4	TWIN CLAMP SET, .84 DIA	
27	8769128	4	TWIN COVERPLATE	
28	8310293	4	HEX HD CAPSCREW, M8-1.25X50mm, PC8.8	
29	2717175	1	ATTACHMENT TILT TWINLINE HOSE	
30	2717176	1	AUXILIARY TWINLINE HOSE	
31	2130808	3	ELBOW, 90 DEGREES	
32	8770136	2	BULKHEAD CONNECTOR	
33	8770129	2	BULKHEAD NUT	
34	91403413	1	FEMALE QUICK-DISCONNECT COUPLER	
35	91403414	1	MALE QUICK-DISCONNECT NIPPLE	
36	8420055	1	DUST PLUG, FOR QUICK-DISCONNECT	
37	8420053	1	DUST CAP, FOR QUICK-DISCONNECT	
38	2717192	2	HOSE ASSY	
39	2717191	2	HOSE ASSY	
40	7301641	2	COMMON BOOM TUBE ASSY, (left side)	
41	7301642	2	COMMON BOOM TUBE ASSY, (right side)	
42	2716998	4	HOSE ASSY	
43	2172010	4	UNION ELBOW, 90 DEGREES	
44	7300742	1	AUXILIARY PORT F TUBE ASSY	
45	7300743	1	AUXILIARY PORT M TUBE ASSY	
46	7300745	1	EXTEND CYLINDER TUBE ASSY	
47	7300746	1	RETRACT CYLINDER TUBE ASSY	
48	2717134	2	HOSE ASSY	

Figure 8-4 Attachment Tilt & Auxiliary (Continued)

Item	Part Number	Qty.	Description	Rev.
49	2717065	1	HOSE ASSY	
50	2717066	1	HOSE ASSY	
51	2717132	1	HOSE ASSY, **(S/N 19386 thru 19605)**	
52	2717131	1	HOSE ASSY, **(S/N 19386 thru 19605)**	
53	2110808	3	CONNECTOR	
54	8770127	2	ELBOW, 45 DEGREES	
55	2110606	1	ADAPTER	
56	2717133	1	HOSE ASSY	
57	2170306	1	RUN TEE	
58	8770117	2	CONNECTOR	
59	8770115	2	ELBOW, 90 DEGREES, (swivel nut)	
60	2717253	1	HOSE ASSY	
61	2717252	1	HOSE ASSY	
62	7301438	2	STC HOSES SERVICE TOOL, 8-12	
63	7301666	2	12 STC MALE PLUG	
64	7301667	2	12 STC FEMALE CAP	
65	7301663	6	8 STC FEMALE CAP	
66	7301662	6	STC MALE PLUG	
67	7020368	16	STC PORT REPAIR SERVICE KIT, (port size - 08), (includes retaining ring, back-up ring & o-ring)	
68	7020369	4	STC PORT REPAIR SERVICE KIT, (port size -12), (includes retaining ring, back-up ring & o-ring)	
69		Ref	AUX. PRESS. DUMP VALVE SOLENOID, (see Figure 9-14 for details)	
70		Ref	ATTACHMENT TILT CYLINDER, (see Figure 9-3 for details)	
71		Ref	MANIFOLD, (see Figure 8-2 for details)	
72		Ref	MAIN CONTROL VALVE, (see Figure 9-9 for details)	
	8024045	1	STC HOSE CONNECTIONS SERVICE KIT, (includes items 62 thru 66)	

Figure 8-4 Attachment Tilt & Auxiliary (Continued)

Item	Part Number	Qty.	Description	Rev.

Figure 8-4 Attachment Tilt & Auxiliary

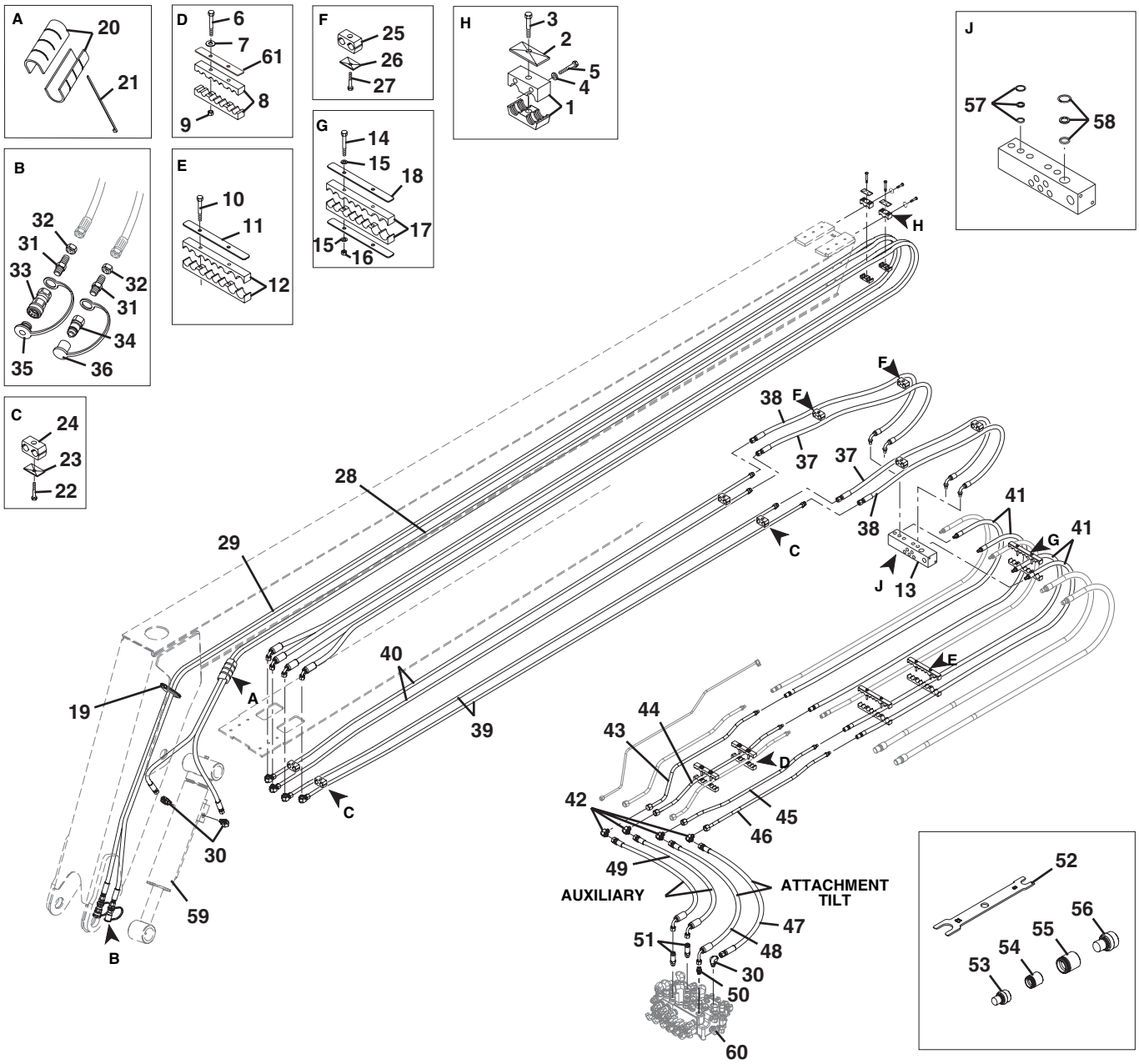

PU2642

Figure 8-4 Attachment Tilt & Auxiliary

Item	Part Number	Qty.	Description	Rev.
1	7300567	2	HOSE CLAMP	
2	8769123	2	TWIN COVERPLATE	
3	8310028	2	HEX HD CAPSCREW, M8-1.25X70mm, PC8.8	
4	8307109	4	PLAIN NARROW WASHER, .250	
5	8310703	4	HEX HD CAPSCREW, M6-1X45mm, PC8.8	
6	8303550	4	HEX HD CAPSCREW, M8-1.25X60mm, PC8.8	
7	8307204	4	PLAIN WIDE WASHER, 3/8	
8	7300750	2	SPECIAL TUBE CLAMP	
9	8305638	4	HEX LOCKNUT, M8-1.25	
10	8303528	4	HEX HD CAPSCREW, M8-1.25X65mm, PC8.8	
11	7300927	1	CLAMP COVER	
12	7300618	1	HOSE CLAMP	
13	7302032	1	HYDRAULIC JUNCTION MANIFOLD	
14	8310028	2	HEX HD CAPSCREW, M8-1.25X70mm, PC8.8	
15	8307222	4	PLAIN WASHER, 8M	
16	8305043	2	NUT, M8X1.25	
17	7300618	1	HOSE CLAMP	
18	7300927	1	CLAMP COVER	
19	7125891	1	CONDUIT, .50X12 LG	
20	7301536	2	HOSE GUARD	
21	8584003	2	TY-RAP	
22	8310476	6	HEX HD CAPSCREW, M8-1.25X35mm, PC8.8	
23	8769123	6	TWIN COVERPLATE	
24	8769122	6	TWIN CLAMP SET, .625 DIA	
25	8750027	4	TWIN CLAMP SET, .84 DIA	
26	8769128	4	TWIN COVERPLATE	
27	8310293	4	HEX HD CAPSCREW, M8-1.25X50mm, PC8.8	
28	2717175	1	ATTACHMENT TILT TWINLINE HOSE	
29	2717176	1	AUXILIARY TWINLINE HOSE	
30	2130808	3	ELBOW, 90 DEGREES	
31	8770136	2	BULKHEAD CONNECTOR	
32	8770129	2	BULKHEAD NUT	
33	91403413	1	FEMALE QUICK-DISCONNECT COUPLER	
34	91403414	1	MALE QUICK-DISCONNECT NIPPLE	
35	8420055	1	DUST PLUG, FOR QUICK-DISCONNECT	
36	8420053	1	DUST CAP, FOR QUICK-DISCONNECT	
37	2717276	2	HOSE ASSY	
38	2717275	2	HOSE ASSY	
39	7301641	2	COMMON BOOM TUBE ASSY, (left side)	
40	7301642	2	COMMON BOOM TUBE ASSY, (right side)	
41	2717265	4	HOSE ASSY	
42	2172010	4	UNION ELBOW, 90 DEGREES	
43	7300742	1	AUXILIARY PORT F TUBE ASSY	
44	7300743	1	AUXILIARY PORT M TUBE ASSY	
45	7300745	1	EXTEND CYLINDER TUBE ASSY	
46	7300746	1	RETRACT CYLINDER TUBE ASSY	
47	2717065	1	HOSE ASSY	
48	2717066	1	HOSE ASSY	
49	2717063	2	HOSE ASSY	

Figure 8-4 Attachment Tilt & Auxiliary (Continued)

Item	Part Number	Qty.	Description	Rev.
50	2110808	1	CONNECTOR	
51	2170108	2	CONNECTOR	
52	7301438	2	STC HOSES SERVICE TOOL, 8-12	
53	7301666	2	12 STC MALE PLUG	
54	7301667	2	12 STC FEMALE CAP	
55	7301663	6	8 STC FEMALE CAP	
56	7301662	6	8 STC MALE PLUG	
57	7020368	16	STC PORT REPAIR SERVICE KIT, (port size - 08) (includes retaining ring, back-up ring & o-ring)	
58	7020369	4	STC PORT REPAIR SERVICE KIT, (port size -12) (includes retaining ring, back-up ring & o-ring)	
59		Ref	ATTACHMENT TILT CYLINDER, (see Figure 9-3 for details)	
60		Ref	MAIN CONTROL VALVE	
61	1321733	2	CLAMP COVER PLATE, **(644E S/N 0160028387 & After), (944E S/N 0160028385 & After)**	
	8024045	1	STC HOSE CONNECTIONS SERVICE KIT, (includes items 52 thru 56)	

Figure 8-4 Attachment Tilt & Auxiliary (Continued)

Item	Part Number	Qty.	Description	Rev.

Figure 8-5 Frame Sway/Stabil-Trak

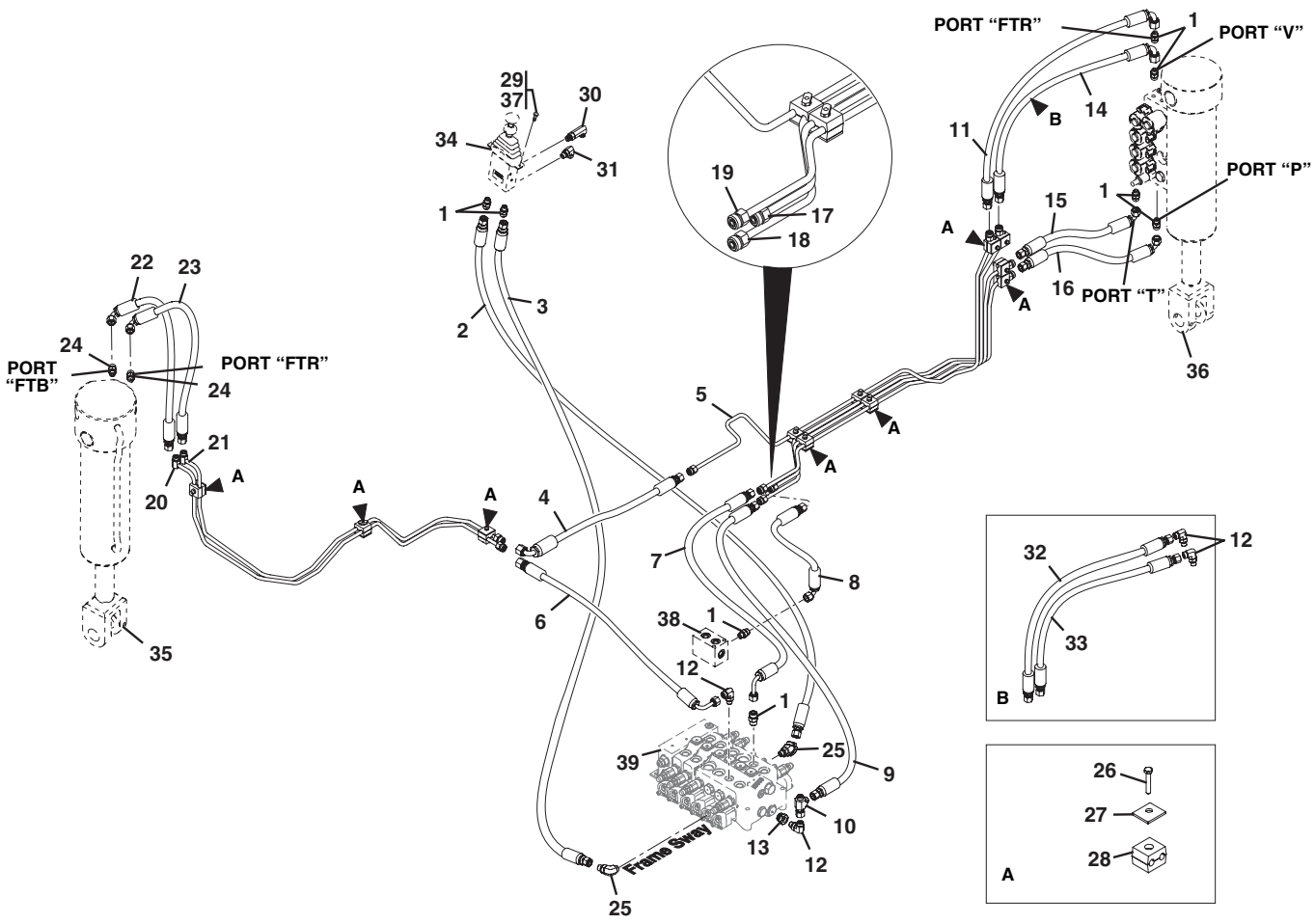

Figure 8-5 Frame Sway/Stabil-Trak

Item	Part Number	Qty.	Description	Rev.
1	2110606	8	ADAPTER	
2	2716963	1	HOSE ASSY	
3	2716966	1	HOSE ASSY	
4	2717060	1	HOSE ASSY	
5	7300499	1	TUBE ASSY	
6	2716950	1	HOSE ASSY	
7	2717058	1	HOSE ASSY	
8	2717059	1	HOSE ASSY	
9	2717057	1	HOSE ASSY	
10	8770111	1	SWIVEL RUN TEE	
11	2717070	1	HOSE ASSY	
12	2130606	2	ELBOW, 90 DEGREES	
13	2220218	1	REDUCER/EXPANDER, #10-6	
14	2717169	1	HOSE ASSY	
15	2717172	1	HOSE ASSY	
16	2717171	1	HOSE ASSY	
17	7300467	1	TUBE ASSY	
18	7300468	1	TUBE ASSY	
19	7300469	1	TUBE ASSY	
20	7300949	1	TUBE ASSY	
21	7300948	1	TUBE ASSY	
22	2717173	1	HOSE ASSY	
23	2717000	1	HOSE ASSY	
24	8902862	2	CHECK VALVE, .054	
25	8770140	2	ELBOW, 45 DEGREES	
26	8303541	11	HEX HD CAPSCREW, M6-1.00X35mm, PC8.8	
27	8750020	11	TWIN COVER PLATE	
28	8750018	11	TWIN CLAMP SET, .375	
29	8303544	2	HEX HD CAPSCREW, M6-1.00X20mm, PC8.8	
30	8770154	1	ELBOW, 90 DEGREES	
31	2130606	1	ELBOW, 90 DEGREES	
32		1	HOSE ASSY, (order items 11 & 1)	
33		1	HOSE ASSY, (order items 14 & 1)	
34		Ref	FRAME SWAY CONTROLLER, (see Figure 7-4 for details)	
35		Ref	FRAME SWAY CYLINDER, (see Figure 9-4 for details)	
36		Ref	STABIL-TRAK CYLINDER, (see Figure 9-5 for details)	
37	8526007	AR	LOCTITE, (apply to item 29)	
38		Ref	MANIFOLD, (see Figure 8-2 for details)	
39		Ref	MAIN CONTROL VALVE, (see Figure 9-9 for details)	

Figure 8-5 Frame Sway/Stabil-Trak

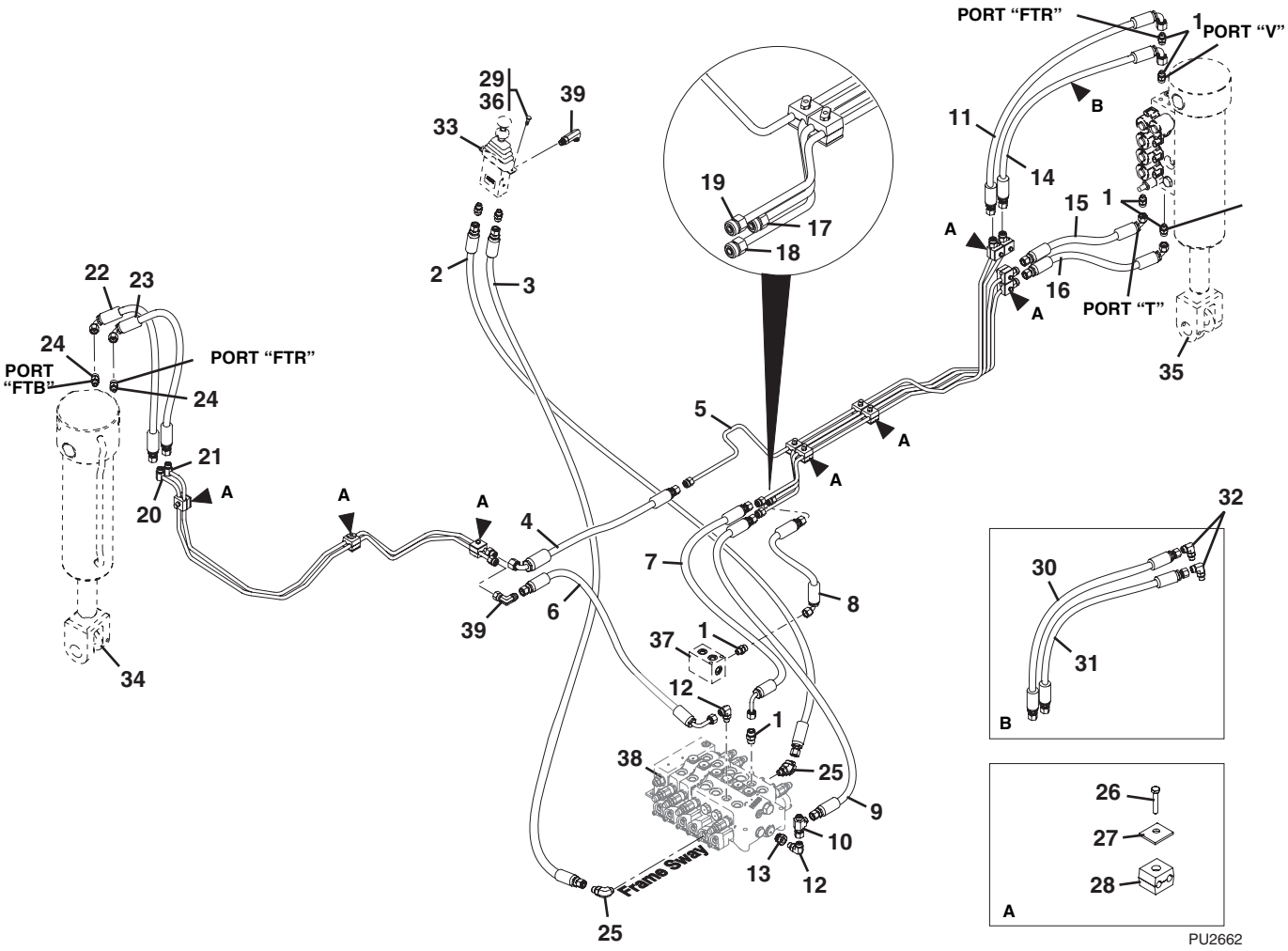

Figure 8-5 Frame Sway/Stabil-Trak

Item	Part Number	Qty.	Description	Rev.
1	2110606	6	ADAPTER	
2	2716963	1	HOSE ASSY	
3	2716966	1	HOSE ASSY	
4	2717060	1	HOSE ASSY	
5	7300499	1	TUBE ASSY	
6	2716950	1	HOSE ASSY	
7	2717058	1	HOSE ASSY	
8	2717059	1	HOSE ASSY	
9	2717057	1	HOSE ASSY	
10	2170706	1	SWIVEL RUN TEE	
11	2717070	1	HOSE ASSY	
12	2130606	2	ELBOW, 90 DEGREES	
13	2220218	1	REDUCER/EXPANDER, #10-6	
14	2717169	1	HOSE ASSY	
15	2717172	1	HOSE ASSY	
16	2717171	1	HOSE ASSY	
17	7300467	1	TUBE ASSY	
18	7300468	1	TUBE ASSY	
19	7300469	1	TUBE ASSY	
20	7300949	1	TUBE ASSY	
21	7300948	1	TUBE ASSY	
22	2717173	1	HOSE ASSY	
23	2717000	1	HOSE ASSY	
24	8902862	2	CHECK VALVE, .054	
25	2150606	2	ELBOW, 45 DEGREES	
26	8303541	11	HEX HD CAPSCREW, M6-100X35mm, PC8.8	
27	8750020	11	TWIN COVER PLATE	
28	8750018	11	TWIN CLAMP SET, .375	
29	8303544	2	HEX HD CAPSCREW, M6-1.00X20mm, PC8.8	
30		1	HOSE ASSY, (order items 11 & 1)	
31		1	HOSE ASSY, (order items 14 & 1)	
32	8770105	2	ELBOW, 90 DEGREES, (swivel nut)	
33		Ref	FRAME SWAY CONTROLLER, (see Figure 7-4 for details)	
34		Ref	FRAME SWAY CYLINDER, (see Figure 9-4 for details)	
35		Ref	STABIL-TRAK CYLINDER, (see Figure 9-5 for details)	
36	8526007	AR	LOCTITE, (apply to item 29)	
37		Ref	MANIFOLD, (see Figure 8-2 for details)	
38		Ref	MAIN CONTROL VALVE, (see Figure 9-9 for details)	
39	2172106	2	ELBOW, 90 DEGREES, (includes o-ring)	

Figure 8-6 Slave Cylinder

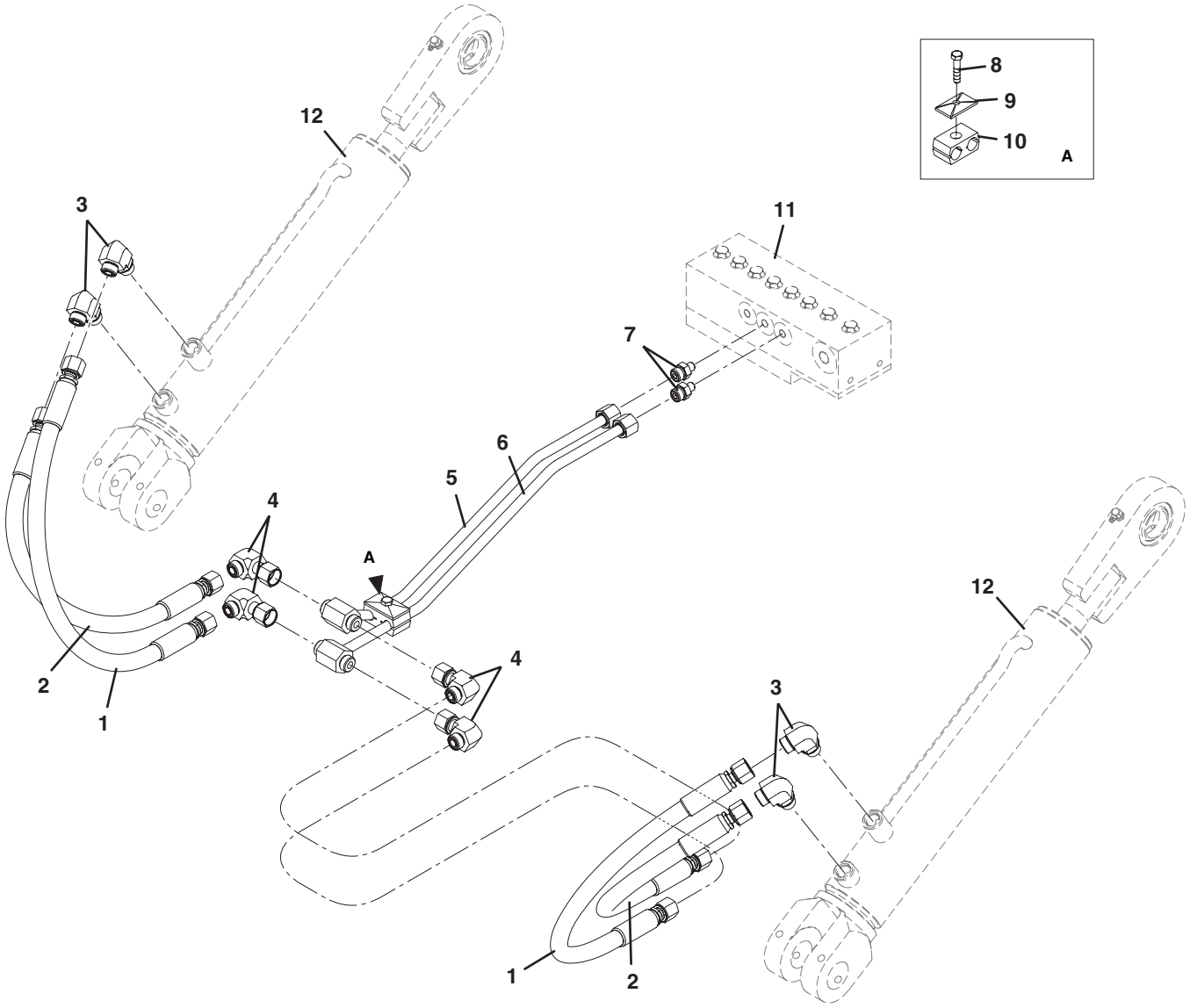

PU2670

Figure 8-6 Slave Cylinder

Item	Part Number	Qty.	Description	Rev.
1	2716980	2	HYDRAULIC HOSE	
2	2716981	2	HYDRAULIC HOSE	
3	2130808	4	ELBOW, 90 DEGREES	
4	8770115	4	ELBOW, 90 DEGREES, (swivel nut)	
5	7300586	1	HYDRAULIC TUBE	
6	7300587	1	HYDRAULIC TUBE	
7	2110808	2	CONNECTOR	
8	8303611	1	HEX HD CAPSCREW, M8-1.25X30mm, PC8.8	
9	8769128	1	TWIN COVER PLATE	
10	8769126	1	TWIN CLAMP SET, .500 DIA	
11		Ref	HYDRAULIC JUNCTION MANIFOLD, (see Figure 8-4 for details)	
12		Ref	SLAVE CYLINDER, (see Figure 9-6 for details)	

Figure 8-6 Slave Cylinder

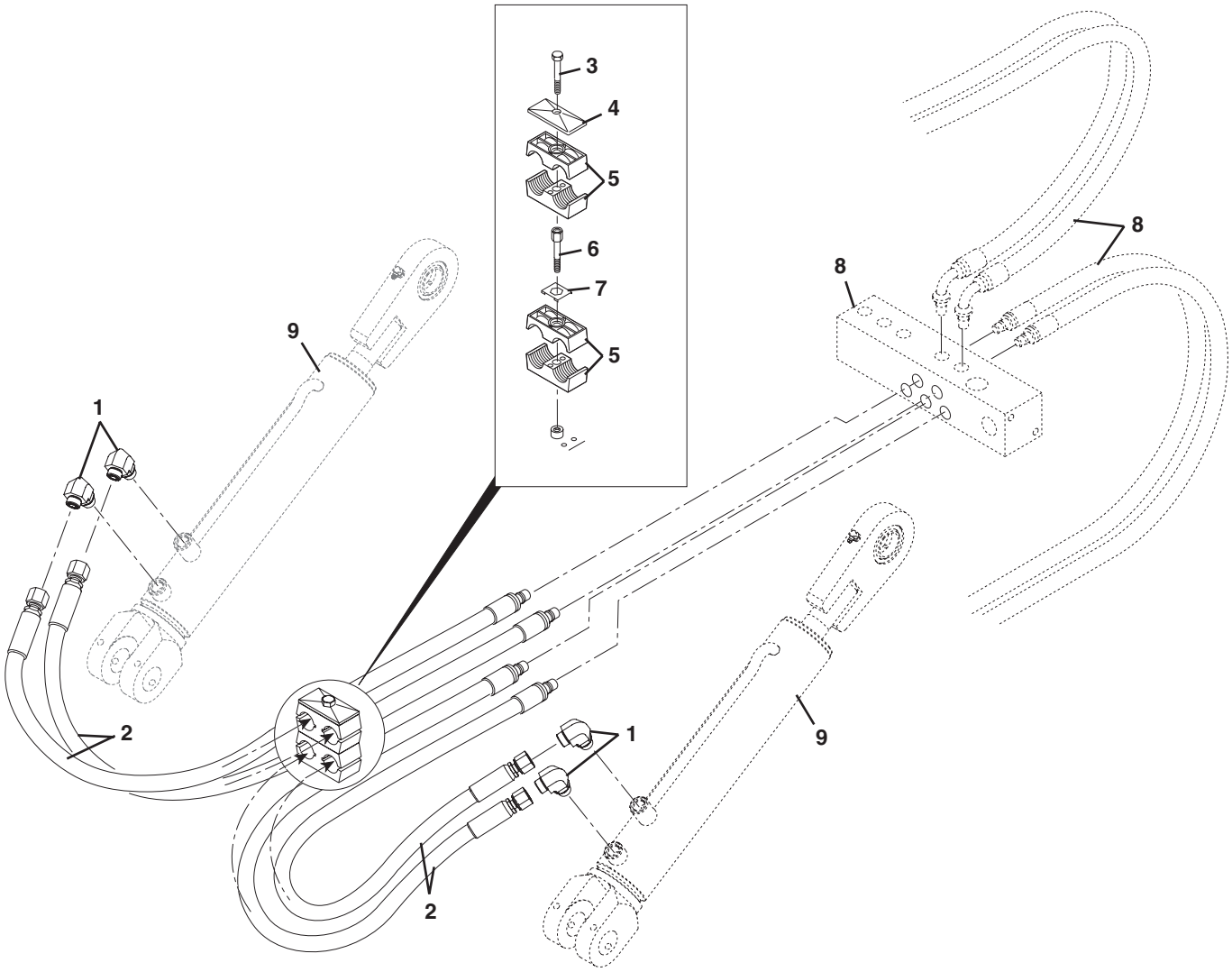

Figure 8-6 Slave Cylinder

Item	Part Number	Qty.	Description	Rev.
1	2130808	4	ELBOW, 90 DEGREES	
2	2717272	4	HOSE ASSY	
3	8310009	1	HEX HD CAPSCREW, .312-18X2.00, GR5	
4	8769128	1	TWIN COVER PLATE	
5	8750027	1	TWIN CLAMP SET, .84 DIA	
6	8750038	1	STACKING BOLT	
7	8750017	1	TWIN CLAMP LOCKING PLATE	
8		Ref	HYDRAULIC JUNCTION MANIFOLD, (see Figure 8-4 for details)	
9		Ref	SLAVE CYLINDER, (see Figure 9-6 for details)	

Figure 8-7 Transfer Carriage

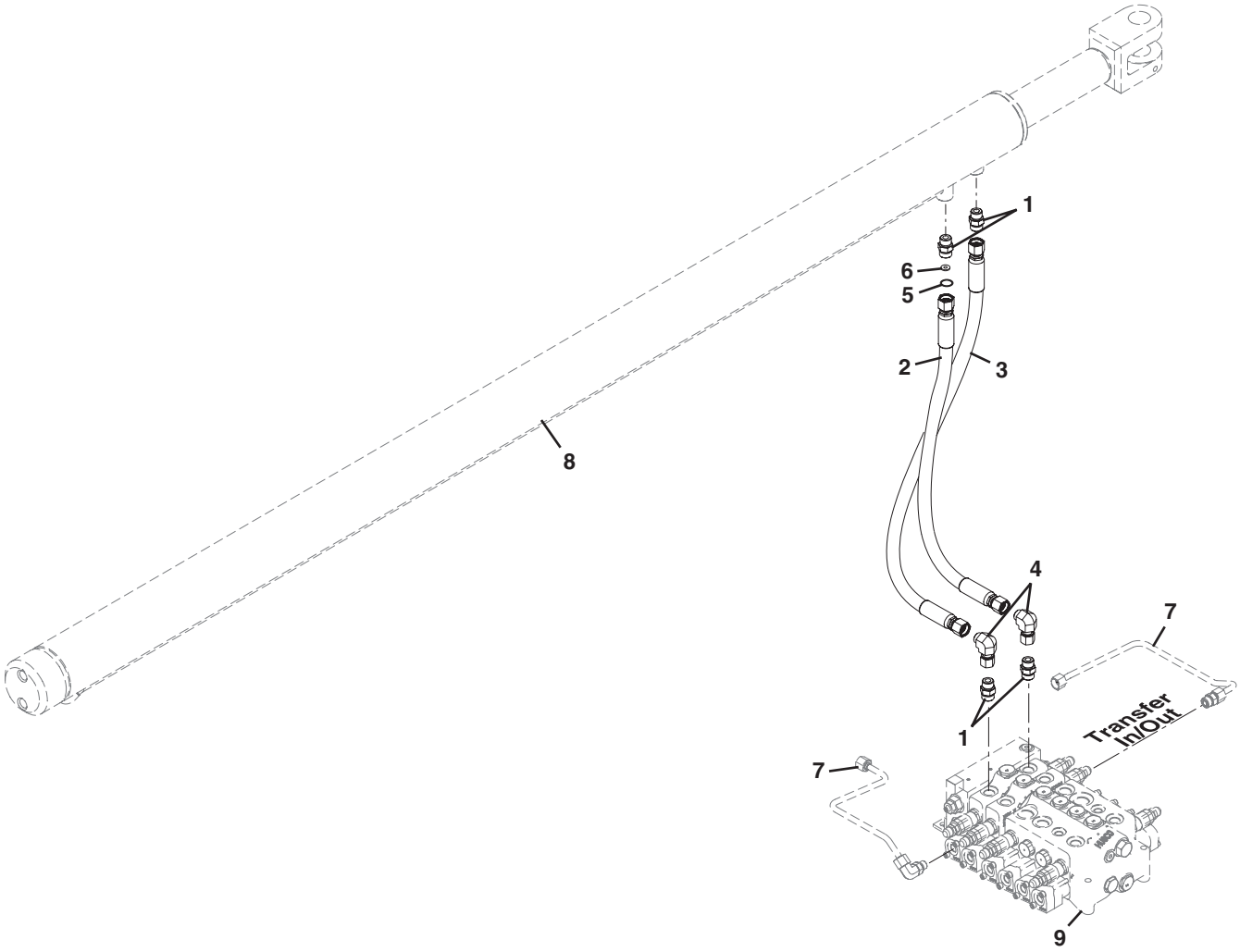

PU2690

Figure 8-7 Transfer Carriage

Item	Part Number	Qty.	Description	Rev.
1	2110808	4	CONNECTOR	
2	2716920	1	HOSE ASSY	
3	2716921	1	HOSE ASSY	
4	2172108	2	ELBOW, 90 DEGREES, (swivel nut)	
5	8630004	1	FLAT FACE O-RING	
6	7301538	1	ORIFICE DISK	
7		Ref	TUBE ASSY, (see Figure 8-9 for details)	
8		Ref	TRANSFER CYLINDER, (see Figure 9-7 for details)	
9		Ref	MAIN CONTROL VALVE, (see Figure 9-9 for details)	

Figure 8-8 Steering Cylinder

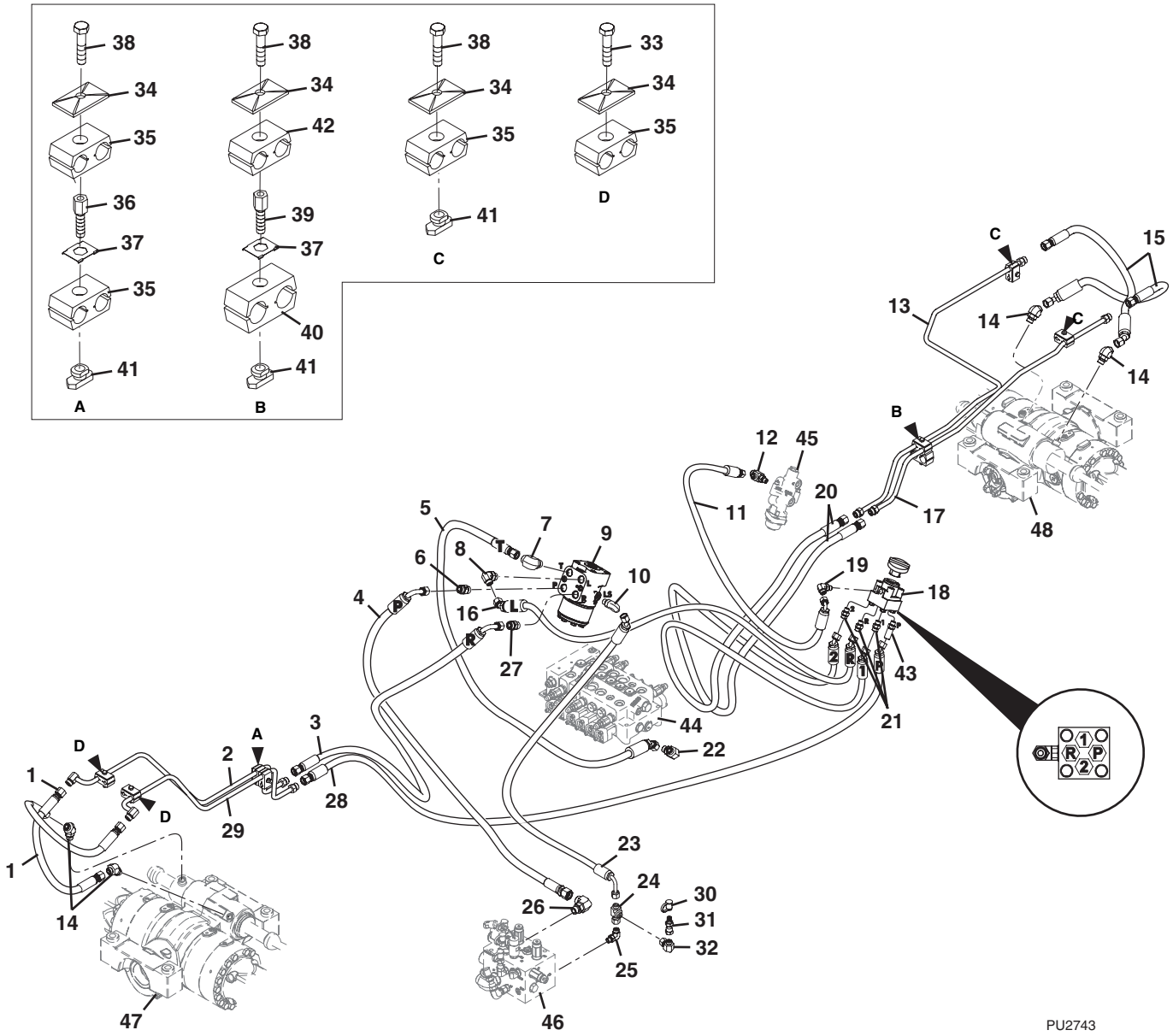

Figure 8-8 Steering Cylinder

Item	Part Number	Qty.	Description	Rev.
1	2716925	2	HOSE ASSY, **(644-E excluding S/N 0160036724, 0160036811, 0160036907 & 0160037012)**, **(944-E excluding S/N 0160034634, 0160036710, 0160036722, 0160036735 & 0160036738)**	
	2716629	2	HOSE ASSY, **(644-E S/N 0160036724, 0160036811, 0160036907 & 0160037012)**, **(944-E S/N 0160034634, 0160036710, 0160036722, 0160036735 & 0160036738)**	
2	7300946	1	FRONT AXLE TUBE ASSY, (left steer)	
3	2717040	1	HOSE ASSY	
4	2716954	1	HOSE ASSY	
5	2716953	1	HOSE ASSY	
6	8770131	1	CONNECTOR w/INLET CHECK	
7	2130808	1	ELBOW, 90 DEGREES	
8	2130608	1	ELBOW, 90 DEGREES	
9	8721032	1	STEER ORIBTAL VALVE, SINGLE STAGE 19CIR	
10	2130604	1	ELBOW, 90 DEGREES	
11	2716927	1	HOSE ASSY	
12	2170306	1	RUN TEE	
13	7300739	1	REAR AXLE TUBE ASSY, (right steer)	
14	2150808	4	ELBOW, 45 DEGREES	
15	2716928	2	HOSE ASSY	
16	2716956	1	HOSE ASSY	
17	7300740	1	REAR AXLE TUBE ASSY, (left steer)	
18	8902310	1	STEER SELECT VALVE	
19	2130606	1	ELBOW, 90 DEGREES	
20	2716955	2	HOSE ASSY	
21	2110606	3	ADAPTER	
22	2130808	1	ELBOW, 90 DEGREES	
23	2717039	1	HOSE ASSY	
24	2170706	1	SWIVEL RUN TEE	
25	2130606	1	ELBOW, 90 DEGREES	
26	2130810	1	ELBOW, 90 DEGREES	
27	2110808	1	CONNECTOR	
28	2716957	1	HOSE ASSY	
29	7300944	1	FRONT AXLE TUBE ASSY, (right steer)	
30	8430098	1	DUST PLUG	
31	8430081	1	DIAGNOSTIC ADAPTER	
32	2172106	1	ELBOW, 90 DEGREES, (swivel nut)	
33	8310293	4	HEX HD CAPSCREW, M8-1.25X50mm, PC8.8	
34	8769123	7	TWIN COVER PLATE	
35	8750042	6	TWIN CLAMP SET, 0.50/0.38	
36	8750037	1	STACKING BOLT	
37	8750017	3	LOCKING PLATE	
38	8310476	5	HEX HD CAPSCREW, M8-1.25X35mm, PC8.8	
39	8750038	2	STACKING BOLT	
40	8769127	2	TWIN CLAMP SET, 1.00 DIA	
41	8750043	5	RAIL NUT, M8	
42	8769126	2	TWIN CLAMP SET, 0.50 DIA	
43	2170106	1	CONNECTOR	
44		Ref	MAIN CONTROL VALVE, (see Figure 9-9 for details)	

Figure 8-8 Steering Cylinder (Continued)

Item	Part Number	Qty.	Description	Rev.
45		Ref	BRAKE VALVE, (see Figure 8-2 for details)	
46		Ref	ACCUMULATOR CHARGE VALVE, (see Figure 9-12 for details)	
47		Ref	FRONT AXLE, (see Figure 5-2 for details)	
48		Ref	REAR AXLE, (see Figure 5-10 for details)	

Figure 8-8 Steering Cylinder (Continued)

Item	Part Number	Qty.	Description	Rev.

Figure 8-9 Front Joystick

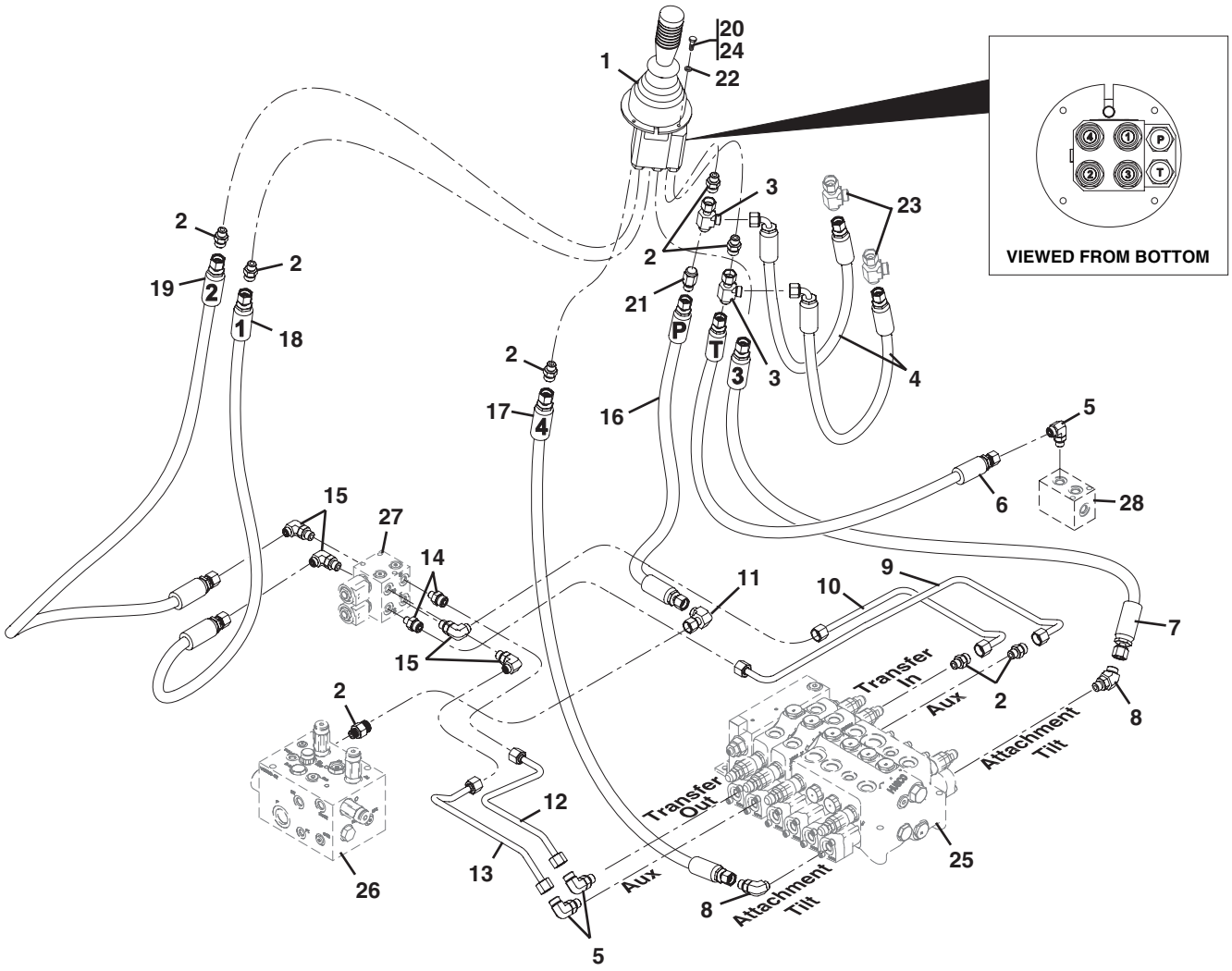

PU2700

Figure 8-9 Front Joystick

Item	Part Number	Qty.	Description	Rev.
1		Ref	JOYSTICK CONTROL VALVE ASSY, (see Figure 7-5 for details)	
2	2110606	9	ADAPTER	
3	8770111	2	SWIVEL RUN TEE	
4	2716967	2	HOSE ASSY	
5	2130606	3	ELBOW, 90 DEGREES	
6	2716961	1	HOSE ASSY	
7	2716964	1	HOSE ASSY	
8	8770140	2	ELBOW, 45 DEGREES	
9	7301005	1	TUBE ASSY	
10	7301004	1	TUBE ASSY	
11	2172106	1	ELBOW, 90 DEGREES, (swivel nut)	
12	7301002	1	TUBE ASSY	
13	7301003	1	TUBE ASSY	
14	2110604	2	CONNECTOR	
15	2130604	4	ELBOW, 90 DEGREES	
16	2716960	1	HOSE ASSY	
17	2716965	1	HOSE ASSY	
18	2716962	1	HOSE ASSY	
19	2716963	1	HOSE ASSY	
20	8303544	4	HEX HD CAPSCREW, M6-1.00X20mm, PC8.8	
21	4641316	1	CHECK VALVE	
22	8307219	4	PLAIN WASHER, M6	
23		Ref	SWIVEL RUN TEE, (see Figure 8-10 for details)	
24	8526007	AR	LOCTITE, (apply to item 20)	
25		Ref	MAIN CONTROL VALVE, (see Figure 9-9 for details)	
26		Ref	ACCUMULATOR CHARGE VALVE, (see Figure 9-13 for details)	
27		Ref	PILOT SELECT VALVE, (see Figure 9-11 for details)	
28		Ref	MANIFOLD, (see Figure 8-2 for details)	

Figure 8-10 Rear Joystick

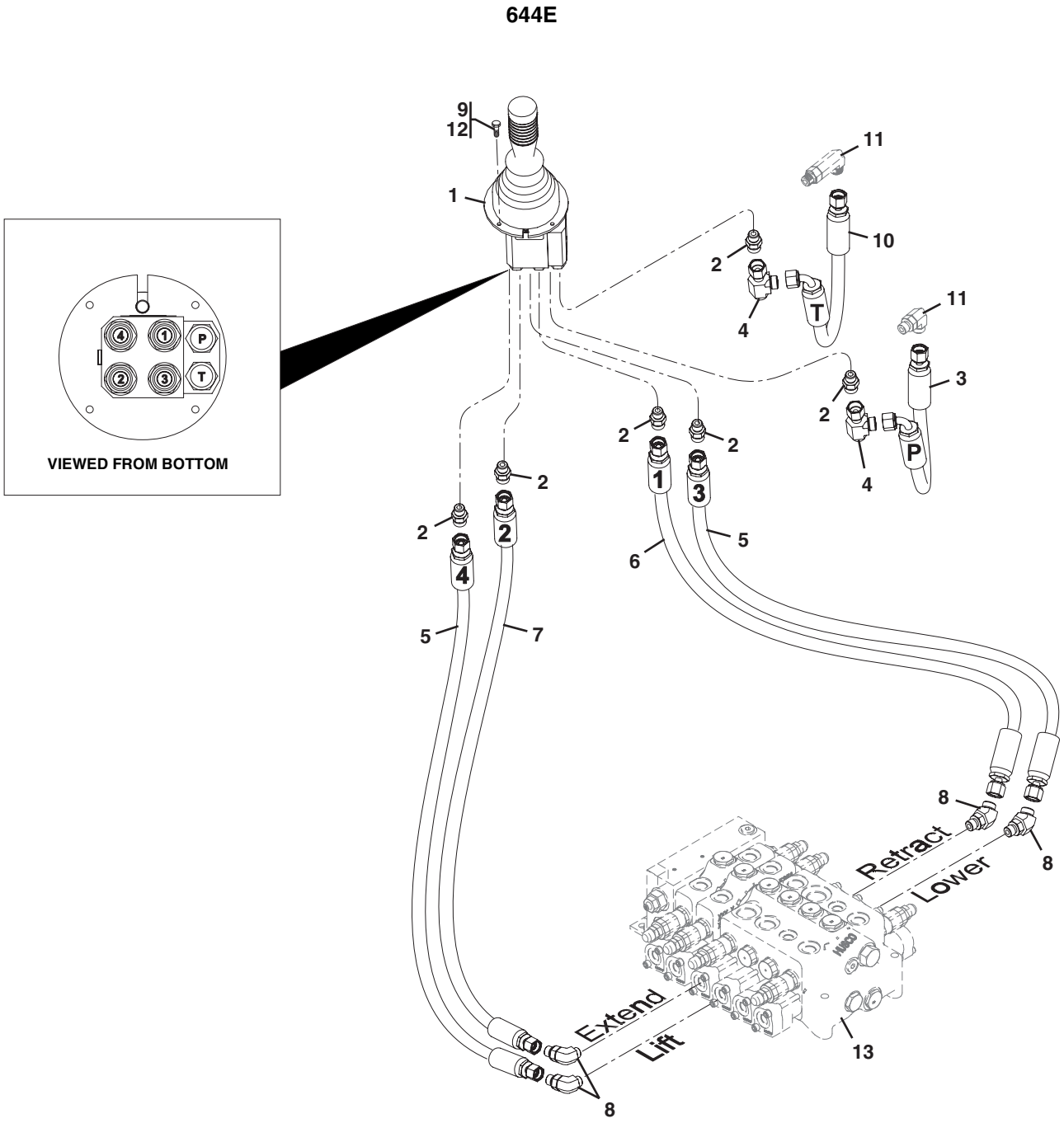

Figure 8-10 Rear Joystick

Item	Part Number	Qty.	Description	Rev.
1		Ref	JOYSTICK CONTROL VALVE ASSY, (see Figure 7-5 for details)	
2	2110606	6	ADAPTER	
3	2716968	1	HOSE ASSY	
4	8770111	2	SWIVEL RUN TEE	
5	2716963	2	HOSE ASSY	
6	2716960	1	HOSE ASSY	
7	2716962	1	HOSE ASSY	
8	8770140	4	ELBOW, 45 DEGREES	
9	8303544	4	HEX HD CAPSCREW, M6-1.00X20mm, PC8.8	
10	2716969	1	HOSE ASSY	
11		Ref	ELBOW, 90 DEGREES, (see Figure 8-5 for details)	
12	8526007	AR	LOCTITE, (apply to item 9)	
13		Ref	MAIN CONTROL VALVE, (see Figure 9-9 for details)	

Figure 8-10 Rear Joystick

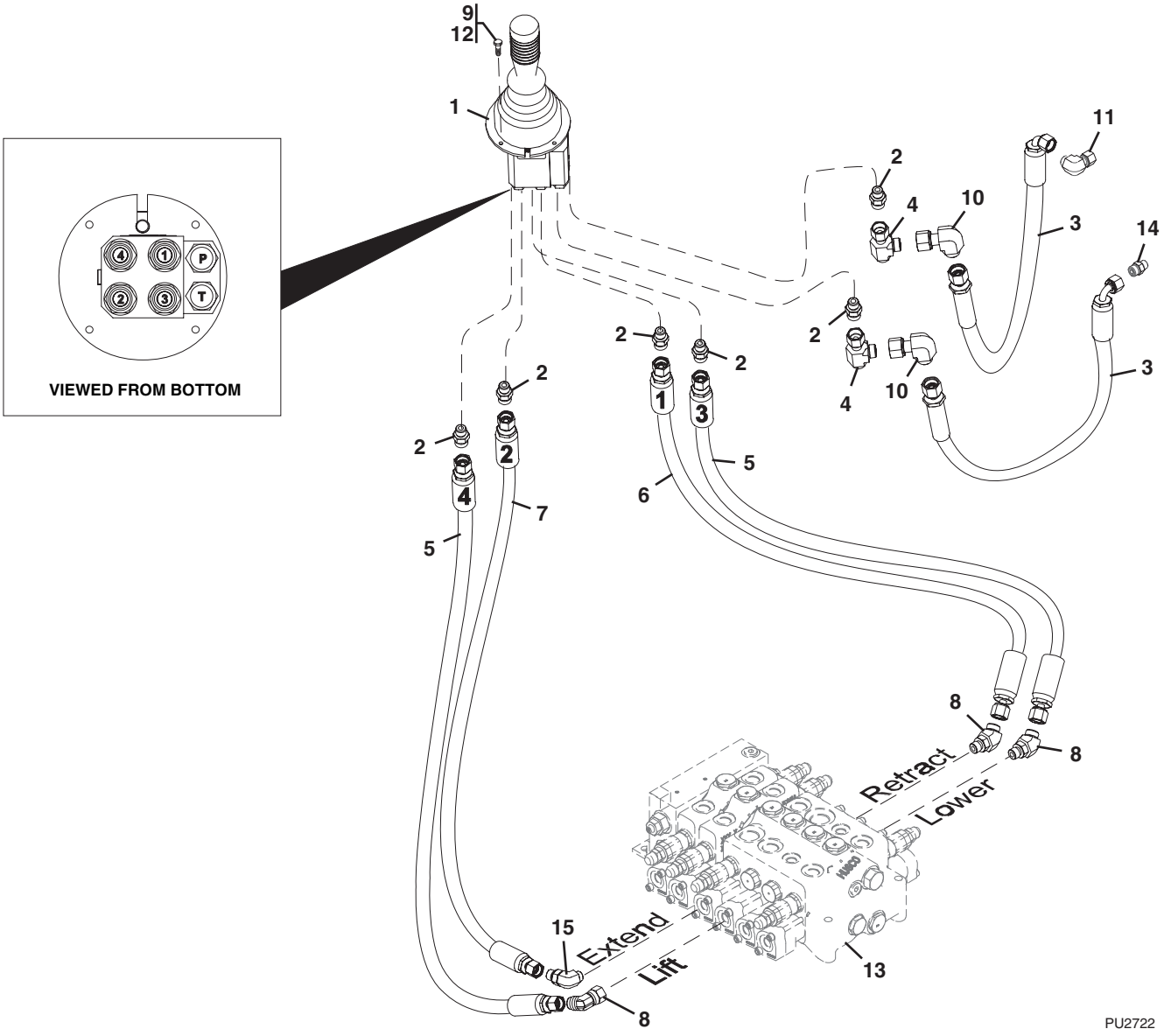

Figure 8-10 Rear Joystick

Item	Part Number	Qty.	Description	Rev.
1		Ref	JOYSTICK CONTROL VALVE ASSY, (see Figure 7-5 for details)	
2	2110606	6	ADAPTER	
3	2716968	2	HOSE ASSY	
4	2170706	2	SWIVEL RUN TEE	
5	2716963	2	HOSE ASSY	
6	2716960	1	HOSE ASSY	
7	2716962	1	HOSE ASSY	
8	2150606	3	ELBOW, 45 DEGREES	
9	8303544	4	HEX HD CAPSCREW, M6-1.00X20mm, PC8.8	
10	2172106	2	ELBOW, 90 DEGREES, (swivel nut)	
11		Ref	ELBOW, 90 DEGREES, (see Figure 8-5 for details)	
12	8526007	AR	LOCTITE, (apply to item 9)	
13		Ref	MAIN CONTROL VALVE, (see Figure 9-9 for details)	
14		Ref	CONNECTOR, (see Figure 7-4 for details)	
15	2130606	1	ELBOW, 90 DEGREES	

Figure 8-11 Single Joystick

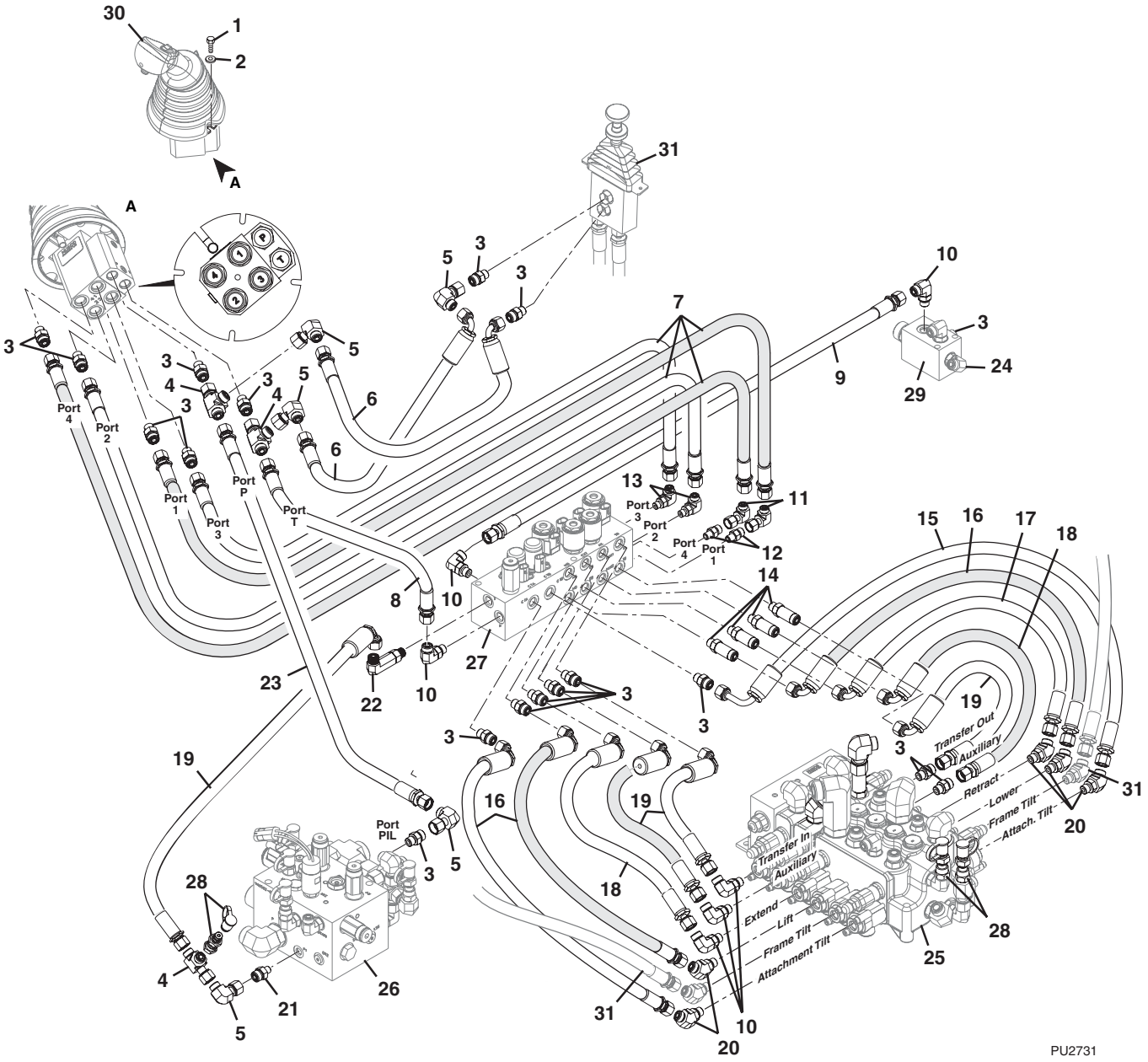

Figure 8-11 Single Joystick

Item	Part Number	Qty.	Description	Rev.
1	8303607	4	HEX HD CAPSCREW, M6X1X25mm, PC8.8	
2	8307219	4	PLAIN WASHER, M6	
3	2110606	18	ADAPTER	
4	2170706	3	SWIVEL RUN TEE	
5	2172106	5	ELBOW, 90 DEGREES, (swivel nut)	
6	2717184	2	HOSE ASSY	
7	2717209	4	HOSE ASSY	
8	2717180	1	HOSE ASSY	
9	2717084	1	HOSE ASSY	
10	2130606	6	ELBOW, 90 DEGREES	
11	2172104	2	ELBOW, 90 DEGREES, (swivel nut)	
12	2110404	2	CONNECTOR	
13	2130404	2	ELBOW, 90 DEGREES	
14	2170106	4	CONNECTOR	
15	2717190	1	HOSE ASSY	
16	2717189	3	HOSE ASSY	
17	2717188	1	HOSE ASSY	
18	2717187	2	HOSE ASSY	
19	2717186	4	HOSE ASSY	
20	2150606	6	ELBOW, 45 DEGREES	
21	2110604	1	CONNECTOR	
22	2170206	1	ELBOW, 90 DEGREES	
23	2717178	1	HOSE ASSY	
24		Ref	ELBOW, 90 DEGREES, (see Figure 8-1 for details)	
25		Ref	MAIN CONTROL VALVE, (see Figure 9-9 for details)	
26		Ref	ACCUMULATOR CHARGE VALVE, (see Figure 9-12 for details)	
27		Ref	PILOT SELECT VALVE, (see Figure 9-11 for details)	
28		Ref	DIAGNOSTIC PRESSURE TAP, (see Figure 9-19 for details)	
29		Ref	MANIFOLD, (see Figure 8-2 for details)	
30		Ref	JOYSTICK CONTROL , (see Figure 7-6 for details)	
31		Ref	FRAME SWAY CONTROL VALVE, (see Figure 7-4 for details)	

Figure 8-12 Transmission Oil Cooler Assembly

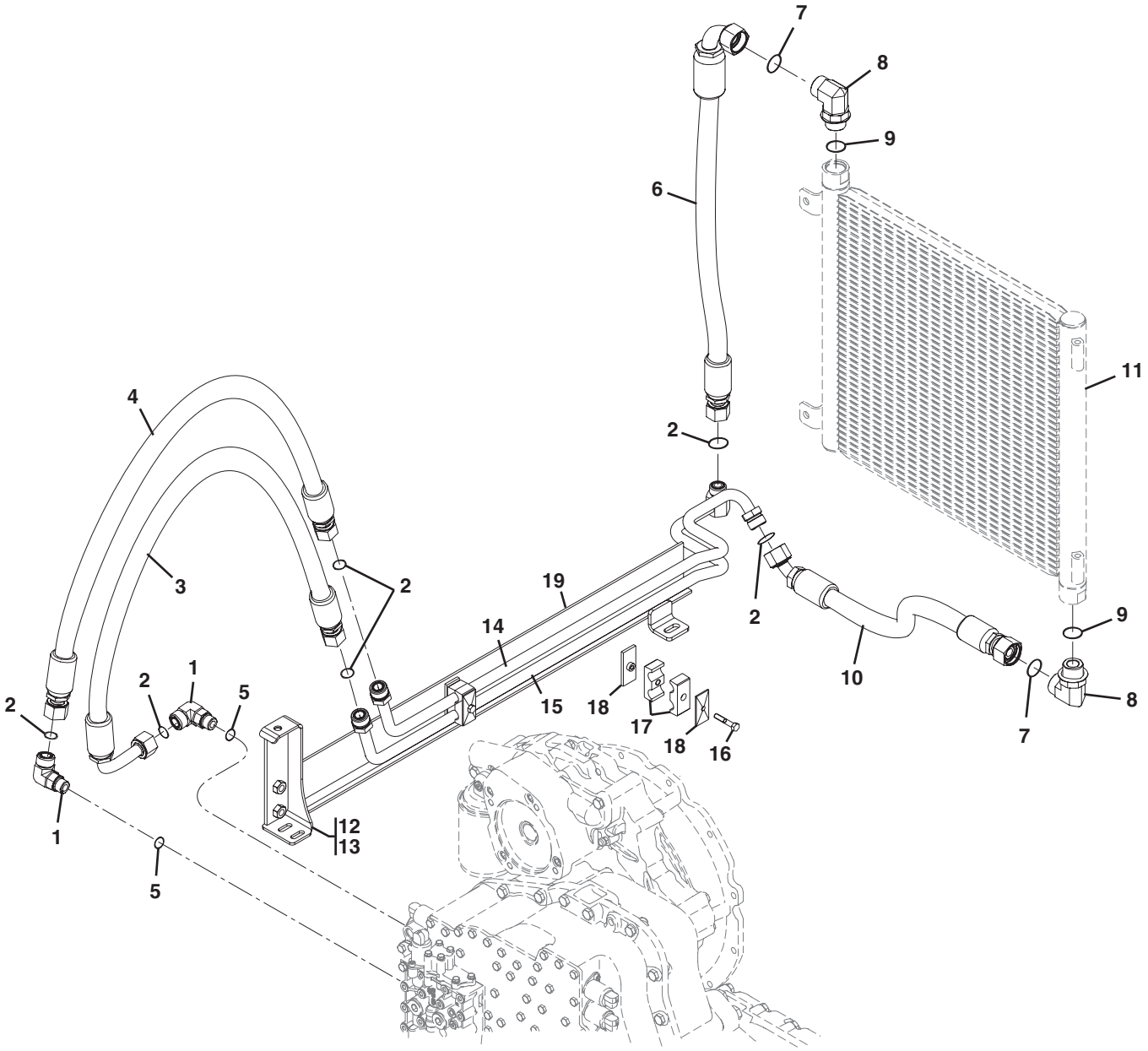

Figure 8-12 Transmission Oil Cooler Assembly

Item	Part Number	Qty.	Description	Rev.
1	2131210	2	ELBOW, 90 DEGREES	
2	8630006	6	O-RING, #12	
3	2717014	1	HOSE ASSY	
4	2717015	1	HOSE ASSY	
5	8630005	2	O-RING, #10	
6	2717051	1	HOSE ASSY	
7	8630007	2	O-RING, #16	
8	2131616	2	ELBOW, 90 DEGREES	
9	8640903	2	O-RING	
10	2717050	1	HOSE ASSY	
11		Ref	TRANSMISSION OIL COOLER ASSY, (see Figure 4-3 for details)	
12	4341041	1	HYDRAULIC TANK RETAINER ASSY, (includes items 13 thru 19)	
13	0903221	1	TUBE SUPPORT BRACKET WELDMENT	
14	3460446	1	COOLER TUBE ASSY	
15	3460471	1	COOLER TUBE ASSY	
16	0641514	2	HEX HD CAPSCREW, 5/16-18X1-3/4	
17	77133136	2	TWIN CLAMP	
18	77133137	2	TWIN CLAMP COVER PLATE	
19	8581036	1	FOAM STRIP	

Figure 8-13 Oil Cooler

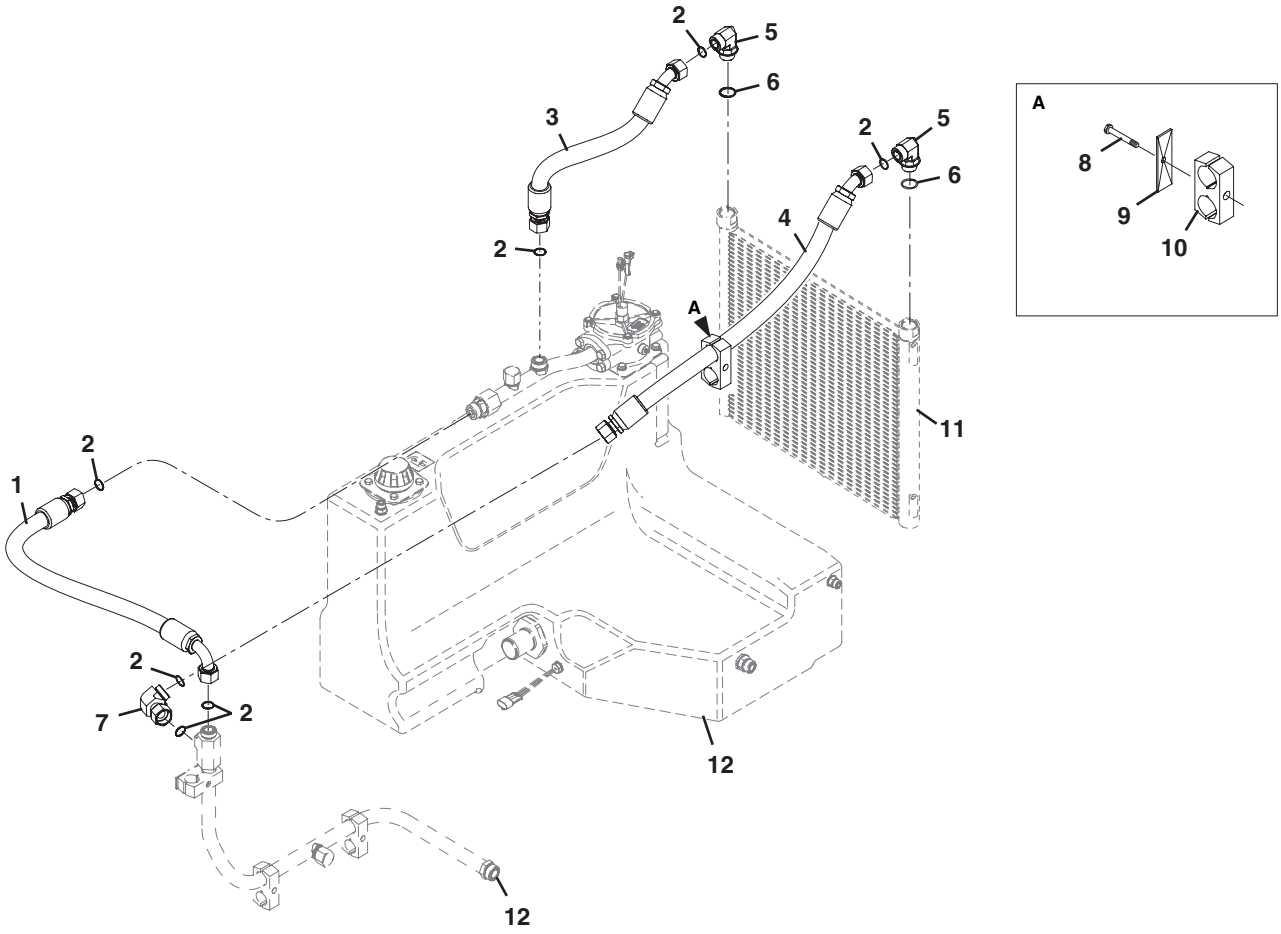

PU2750

Figure 8-13 Oil Cooler

Item	Part Number	Qty.	Description	Rev.
1	2717016	1	HOSE ASSY	
2	8630007	7	O-RING, #16	
3	2716914	1	HOSE ASSY	
4	2716915	1	HOSE ASSY	
5	8770196	2	ELBOW, 90 DEGREES	
6	8770091	2	O-RING	
7	2172116	1	ELBOW, 90 DEGREES, (swivel nut)	
8	8303550	1	HEX HD CAPSCREW, M8-1.25X60mm, PC8.8	
9	8750025	1	TWIN COVER PLATE	
10	8750040	1	TWIN CLAMP SET, 1.46 DIA	
11		Ref	HYDRAULIC OIL COOLER ASSY, (see Figure 4-3 for details)	
12		Ref	HYDRAULIC RESERVOIR, (see Figure 9-17 for details)	

This Page Intentionally Left Blank

SECTION 9
HYDRAULIC COMPONENTS

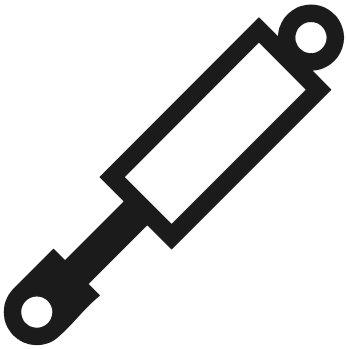

Figure 9-1 Extend/Retract Cylinder

644E

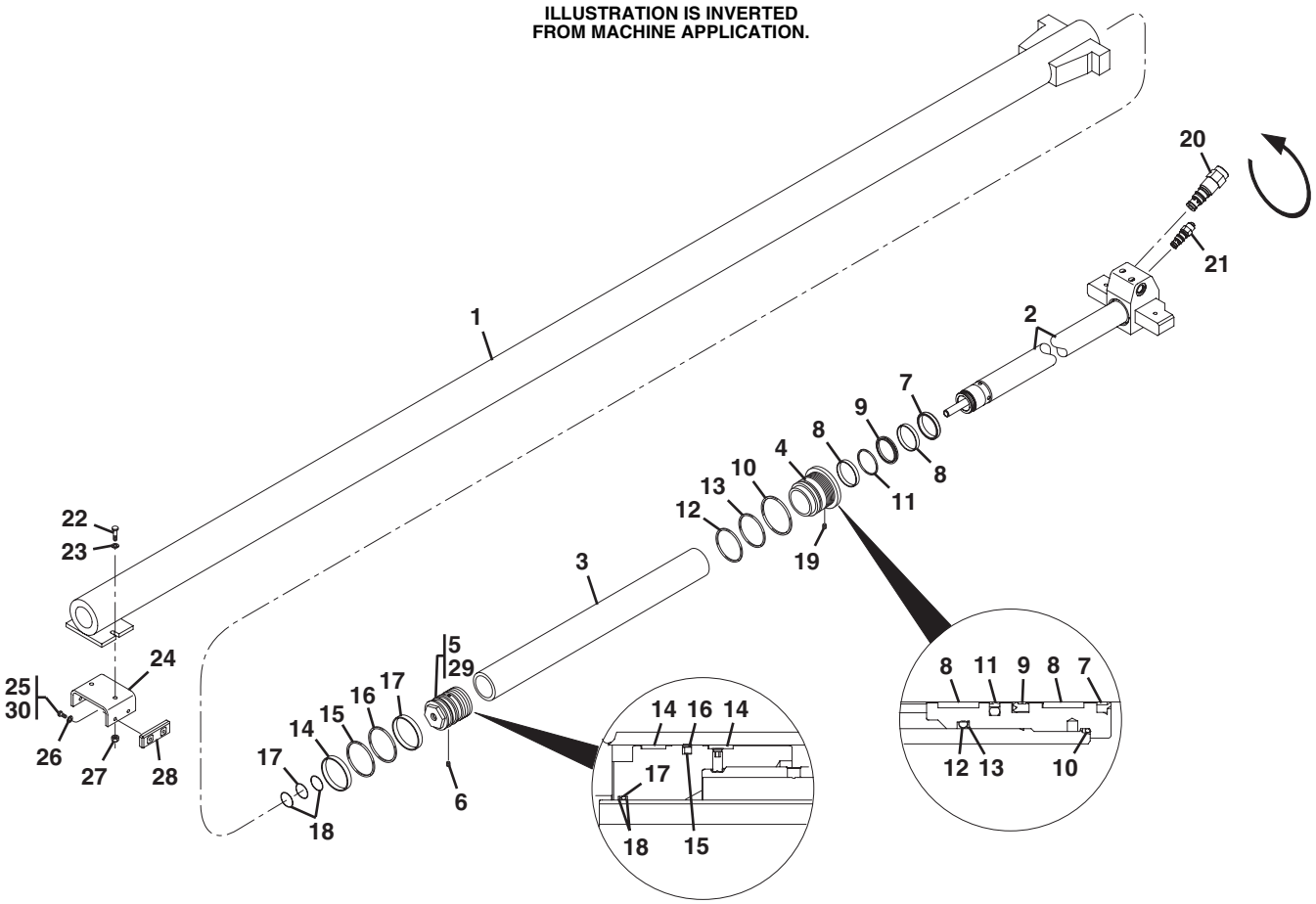

Figure 9-1 Extend/Retract Cylinder

Item	Part Number	Qty.	Description	Rev.
		1	EXTEND CYLINDER, (order Service Kit, 8024061)	
1		1	WELDMENT TUBE	
2	8036591	1	ROD WELDMENT	
3	8036592	1	ROD SPACER	
4	8036593	1	HEAD GLAND, (torque to 300-400 lb-ft)	
5	8036594	1	PISTON, (torque to 330-390 lb-ft)	
6	8035315	1	SET SCREW, 5/16-18X.63, (loctite #243 & torque to 155-175 lb-in)	
7		1	WIPER SEAL	
8		2	PRECISION WEARBAND	
9		1	BT U-CUP	
10		1	O-RING	
11		1	TFE BUFFER SEAL	
12		1	O-RING	
13		1	BACKUP RING	
14		2	PRECISION WEARBAND	
15		1	RECT. SECTION SEAL, TFE PISTON	
16		1	SQUARE RING	
17		1	O-RING	
18		2	DYNAMIC BACKUP RING	
19		2	LOCKING INSERT	
20	8036590	1	COUNTERBALANCE VALVE, ISEL90 4000 PSI, (275 bar)	
	8205657	1	SEAL KIT	
21	8036229	1	PO CHECK VALVE, (torque to 45-50 lb-ft)	
	8205656	1	SEAL KIT	
22	8303785	2	HEX HD CAPSCREW, M2-1.75X45mm, PC8.8	
23	8307220	2	PLAIN WASHER, M12	
24	7300509	1	EXTEND CYLINDER BRACKET PAD MOUNT	
25	8303784	4	HEX HD CAPSCREW, M10-1.5X20mm, PC8.8	
26	8307221	4	PLAIN WASHER, M10	
27	8310625	4	HEX LOCKNUT, M12-1.75	
28	7300032	2	WEAR PAD	
29	8526011	AR	LOCTITE, #271, (apply to item 5)	
30	8526007	AR	LOCTITE, #242, (apply to item 25)	
	8036475	1	SEAL KIT, (includes items 7 thru 19)	
	8024061	1	EXTEND CYLINDER SERVICE KIT, (includes Extend Cylinder, 2717241, & Rear Boom Cover, 7302064)	

Figure 9-1 Extend/Retract Cylinder

644E

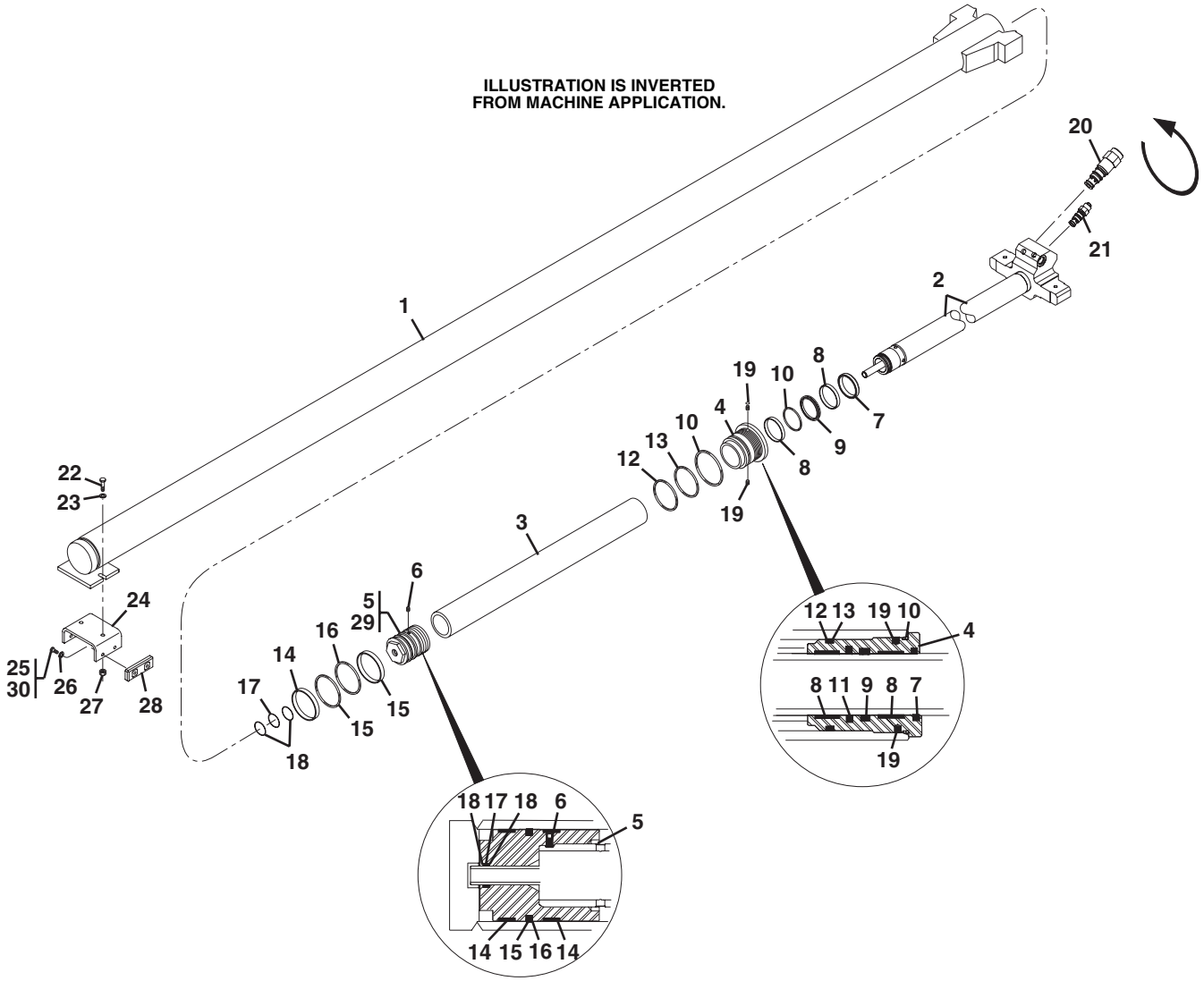

Figure 9-1 Extend/Retract Cylinder

Item	Part Number	Qty.	Description	Rev.
	2717241	1	EXTEND CYLINDER, (includes items 1 thru 21)	
1		1	WELDMENT TUBE	
2	7026629	1	ROD WELDMENT	
3	8036592	1	ROD SPACER	
4	8036593	1	HEAD GLAND, (torque to 300-400 lb-ft)	
5	8036594	1	PISTON, (torque to 330-390 lb-ft)	
6	8035315	1	SET SCREW, 5/16-18X.63, (loctite #243 & torque to 155-175 lb-in)	
7		1	WIPER SEAL	
8		2	PRECISION WEARBAND	
9		1	U-CUP, BT	
10		1	O-RING	
11		1	TFE BUFFER SEAL	
12		1	O-RING	
13		1	BACKUP RING	
14		2	WEARBAND, PRECISION	
15		1	RECT. SECTION SEAL, TFE PISTON	
16		1	SQUARE RING	
17		1	O-RING	
18		2	DYNAMIC BACKUP RING	
19		2	LOCKING INSERT	
20	7026628	1	COUNTERBALANCE VALVE, 4065 PSI, (280 bar), (torque to 150-160 lb-ft)	
	8205657	1	SEAL KIT	
21	8036229	1	PO CHECK VALVE, (torque to 45-50 lb-ft)	
	8205656	1	SEAL KIT	
22	8303785	2	HEX HD CAPSCREW, M2-1.75X45mm, PC8.8	
23	8307220	2	PLAIN WASHER, M12	
24	7300509	1	EXTEND CYLINDER BRACKET PAD MOUNT	
25	8303784	4	HEX HD CAPSCREW, M10-1.5X20mm, PC8.8	
26	8307221	4	PLAIN WASHER, M10	
27	8310625	4	HEX LOCKNUT, M12-1.75	
28	7300032	2	WEAR PAD	
29	8526011	AR	LOCTITE, #271, (apply to item 5)	
30	8526007	AR	LOCTITE, #242, (apply to item 25)	
	8036475	1	SEAL KIT, (includes items 7 thru 19)	

Figure 9-1 Extend/Retract Cylinder

944E

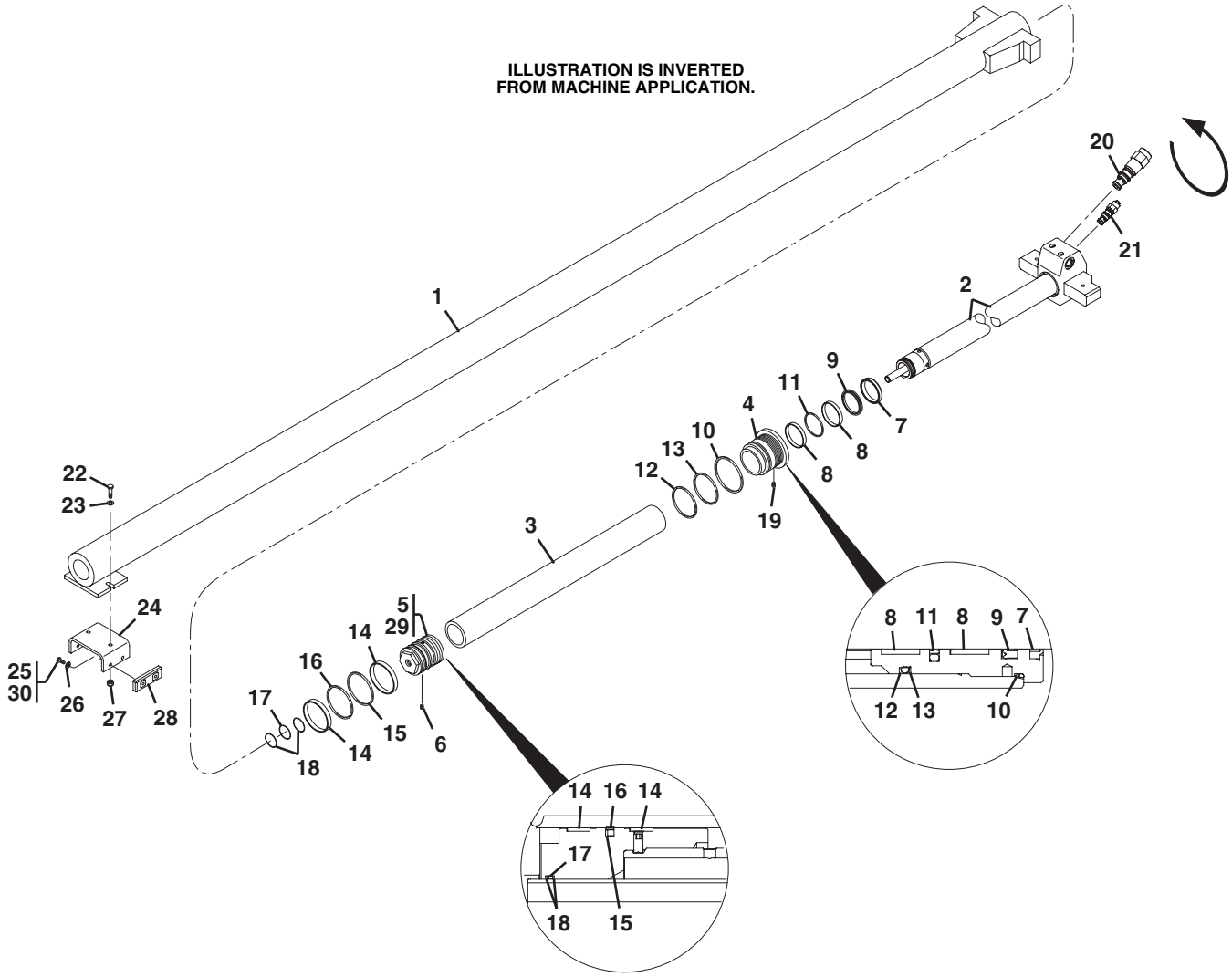

Figure 9-1 Extend/Retract Cylinder

Item	Part Number	Qty.	Description	Rev.
		1	EXTEND CYLINDER, (2716897 NLA; order Service Kit 8024062)	
1		1	WELDMENT TUBE	
2	7026630	1	ROD WELDMENT	
3	8036638	1	ROD SPACER	
4	8036639	1	HEAD GLAND, (torque to 300-400 lb-ft)	
5	8036233	1	PISTON, (torque to 330-390 lb-ft)	
6	8035315	1	SET SCREW, 5/16-18 X.63, (loctite #243 & torque to 330-390 lb-in)	
7		1	WIPER SEAL	
8		2	PECISION WEARBAND	
9		1	U-CUP, BS	
10		1	O-RING	
11		1	TFE BUFFER SEAL	
12		1	O-RING	
13		1	BACKUP RING	
14		2	PECISION WEARBAND	
15		1	RECT. SECTION SEAL, TFE PISTON	
16		1	SQUARE RING	
17		1	O-RING	
18		2	DYNAMIC BACKUP RING	
19		2	LOCKING INSERT	
20	8036590	1	COUNTERBALANCE VALVE, 4000 PSI, (275 bar), (torque to 45-50 lb-ft)	
	8205656	1	SEAL KIT	
21	8036229	1	PO CHECK VALVE, (torque to 45-50 lb-ft)	
	8205656	1	SEAL KIT	
22	8303785	2	HEX HD CAPSCREW, M2-1.75X45mm, PC8.8	
23	8307220	2	PLAIN WASHER, M12	
24	7300509	1	BRACKET, EXTEND CYLINDER PAD MOUNT	
25	8303784	4	HEX HD CAPSCREW, M10-1.5X20mm, PC8.8	
26	8307221	4	PLAIN WASHER, M10	
27	8310625	4	HEX LOCKNUT, M12-1.75	
28	7300032	2	WEAR PAD	
29	8526011	AR	LOCTITE, #271, (apply to item 5)	
30	8526007	AR	LOCTITE, #242, (apply to item 25)	
	8036328	1	SEAL KIT, (includes items 7 thru 19)	
	8024062	1	EXTEND CYLINDER SERVICE KIT, (includes Extend Cylinder, 2717243, & Rear Boom Cover, 7302065)	

Figure 9-1 Extend/Retract Cylinder

944E

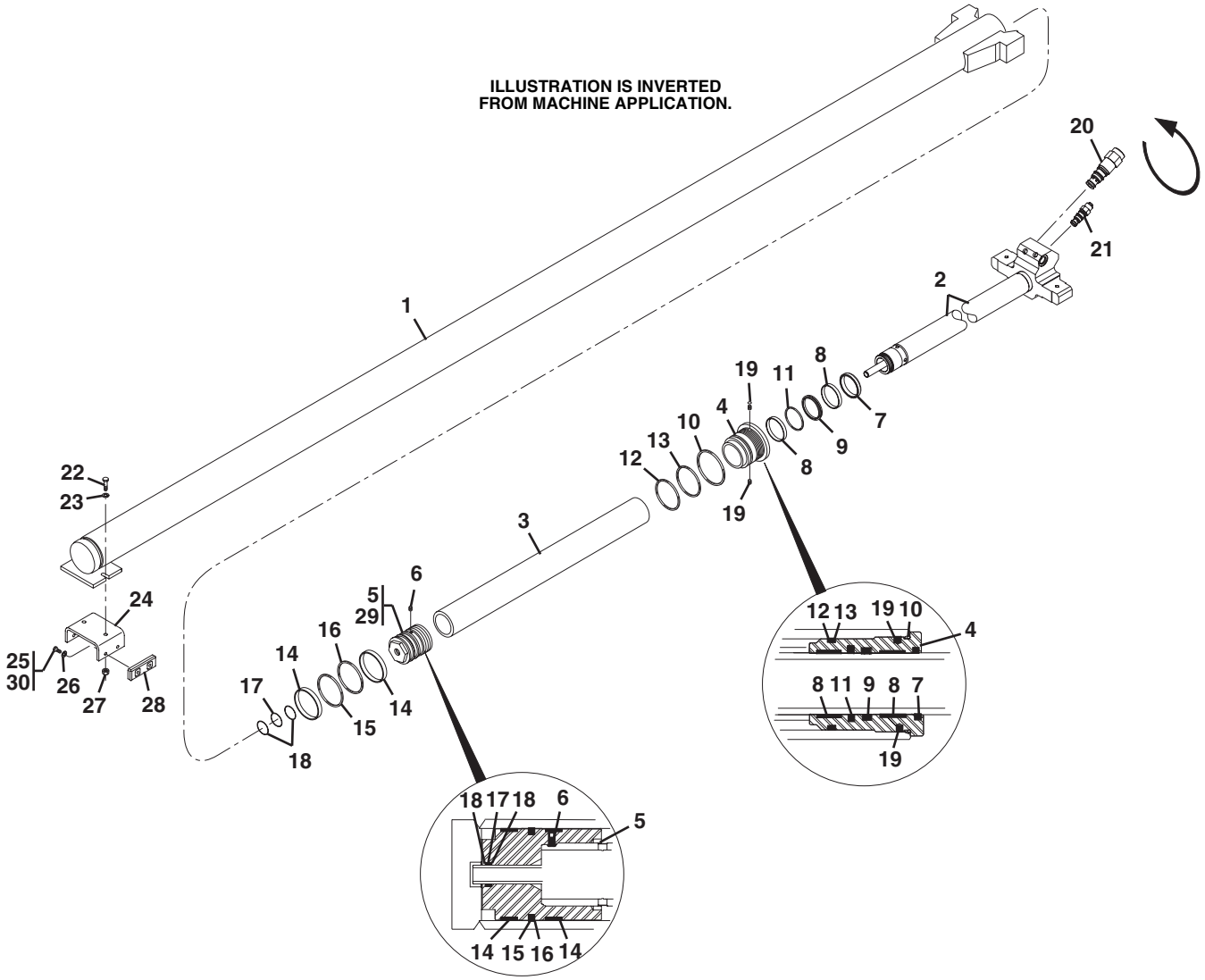

Figure 9-1 Extend/Retract Cylinder

Item	Part Number	Qty.	Description	Rev.
	2717243	1	EXTEND CYLINDER, (includes items 1 thru 21)	
1		1	WELDMENT TUBE	
2	7026630	1	ROD WELDMENT	
3	8036638	1	ROD SPACER	
4	8036639	1	HEAD GLAND, (torque to 300-400 lb-ft)	
5	8036233	1	PISTON, (loctite & torque to 330-390 lb-ft)	
6	8035315	1	SET SCREW, 5/16-18X.63, (loctite #243 & torque to 155-175 lb-in)	
7		1	WIPER SEAL	
8		2	PECISION WEARBAND	
9		1	U-CUP, BT	
10		1	O-RING	
11		1	TFE BUFFER SEAL	
12		1	O-RING	
13		1	BACKUP RING	
14		2	PRECISION WEARBAND	
15		1	RECT. SECTION TFE PISTON SEAL	
16		1	SQUARE RING	
17		1	O-RING	
18		2	DYNAMIC BACKUP RING	
19		2	LOCKING INSERT	
20	7026628	1	COUNTERBALANCE VALVE, 4065 PSI, (280 bar), (torque to 150-160 lb-ft)	
	8205657	1	SEAL KIT	
21	7029513	1	PO CHECK VALVE, (torque to 45-50 lb-ft)	
	7029518	1	SEAL KIT	
22	8303785	2	HEX HD CAPSCREW, M2-1.75X45mm, PC8.8	
23	8307220	2	PLAIN WASHER, M12	
24	7300509	1	EXTEND CYLINDER BRACKET PAD MOUNT	
25	8303784	4	HEX HD CAPSCREW, M10-1.5X20mm, PC8.8	
26	8307221	4	PLAIN WASHER, M10	
27	8310625	4	HEX LOCKNUT, M12-1.75	
28	7300032	2	WEAR PAD	
29	8526011	AR	LOCTITE, #271, (apply to item 5)	
30	8526007	AR	LOCTITE, #242, (apply to item 25)	
	70020310	1	SEAL KIT, (includes items 7 thru 19)	

Figure 9-2 Lift/Lower Cylinder

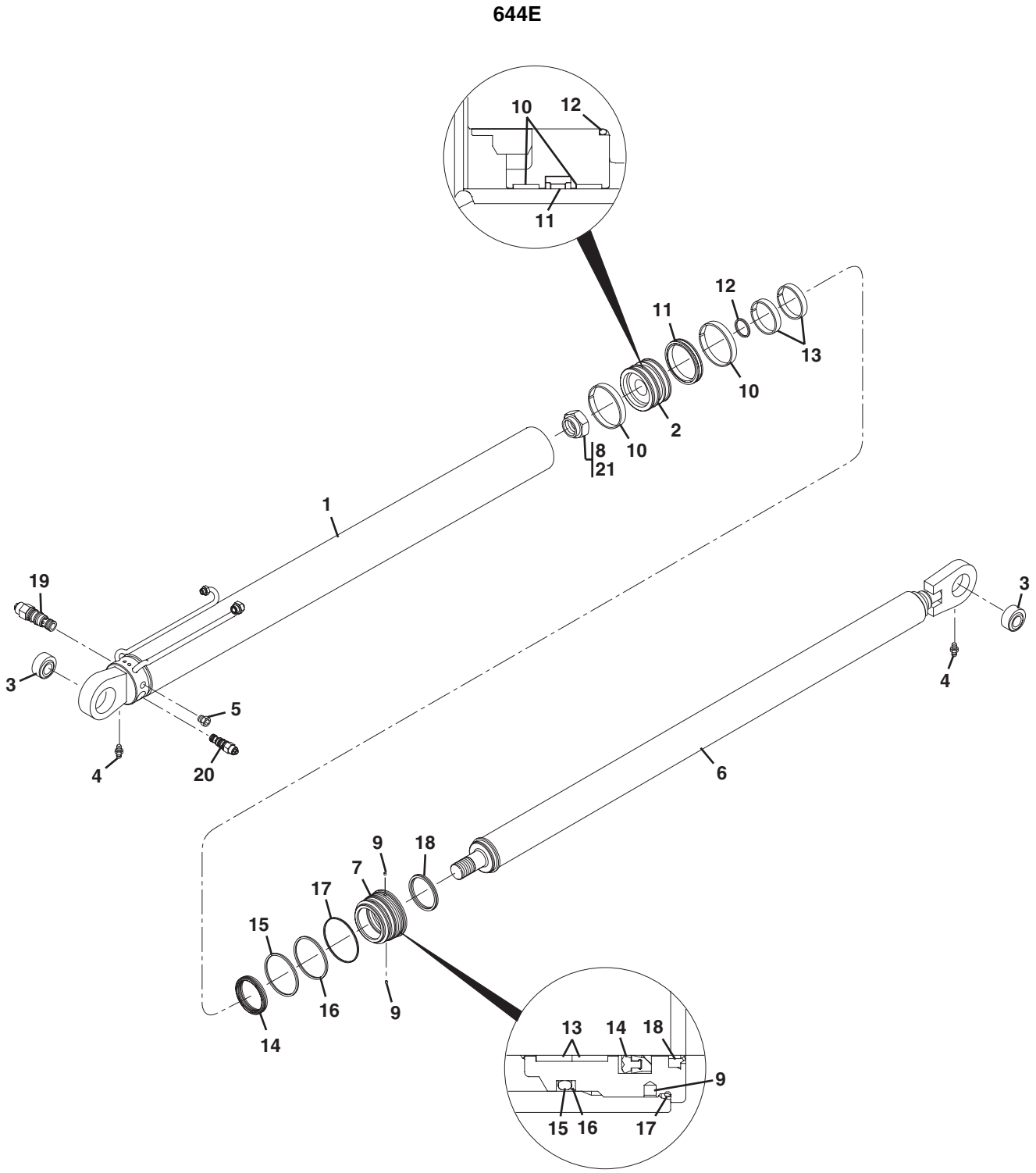

Figure 9-2 Lift/Lower Cylinder

Item	Part Number	Qty.	Description	Rev.
	2716904	1	LIFT/LOWER CYLINDER, (includes items 1 thru 20)	
1		1	WELDMENT TUBE	
2	8035309	1	PISTON	
3	8036236	2	SPHERICAL BEARING, w/SEALS	
4	8520013	2	LUBE FITTING, 1/8-27	
5	8035785	2	HOLLOW HEX PLUG, #4, (torque to 10-12 lb-ft)	
6	8036597	1	WELDMENT ROD	
7	8036598	1	HEAD GLAND, (torque to 10-120 lb-ft)	
8	8035308	1	LOCKNUT, 2-12, (loctite & torque to 2200-2600 lb-ft)	
9		2	LOCKING INSERT	
10		2	PRECISION WEARBAND	
11		1	CAPPED T SEAL	
12		1	O-RING	
13		2	PRECISION WEARBAND	
14		1	DZR SEAL	
15		1	O-RING	
16		1	BACKUP RING	
17		1	O-RING	
18		1	WIPER SEAL	
19	8036596	1	COUNTERBALANCE VALVE, 4000 PSI, (275 bar), (torque to 40-45 lb-ft)	
	8205656	1	SEAL KIT	
20	8036229	1	PO CHECK VALVE, (torque to 40-45 lb-ft)	
	8205656	1	SEAL KIT	
21	8526011	AR	LOCTITE, #271, (apply to item 8)	
	8036474	1	SEAL KIT, (includes items 9 thru 18)	

Figure 9-2 Lift/Lower Cylinder

944E

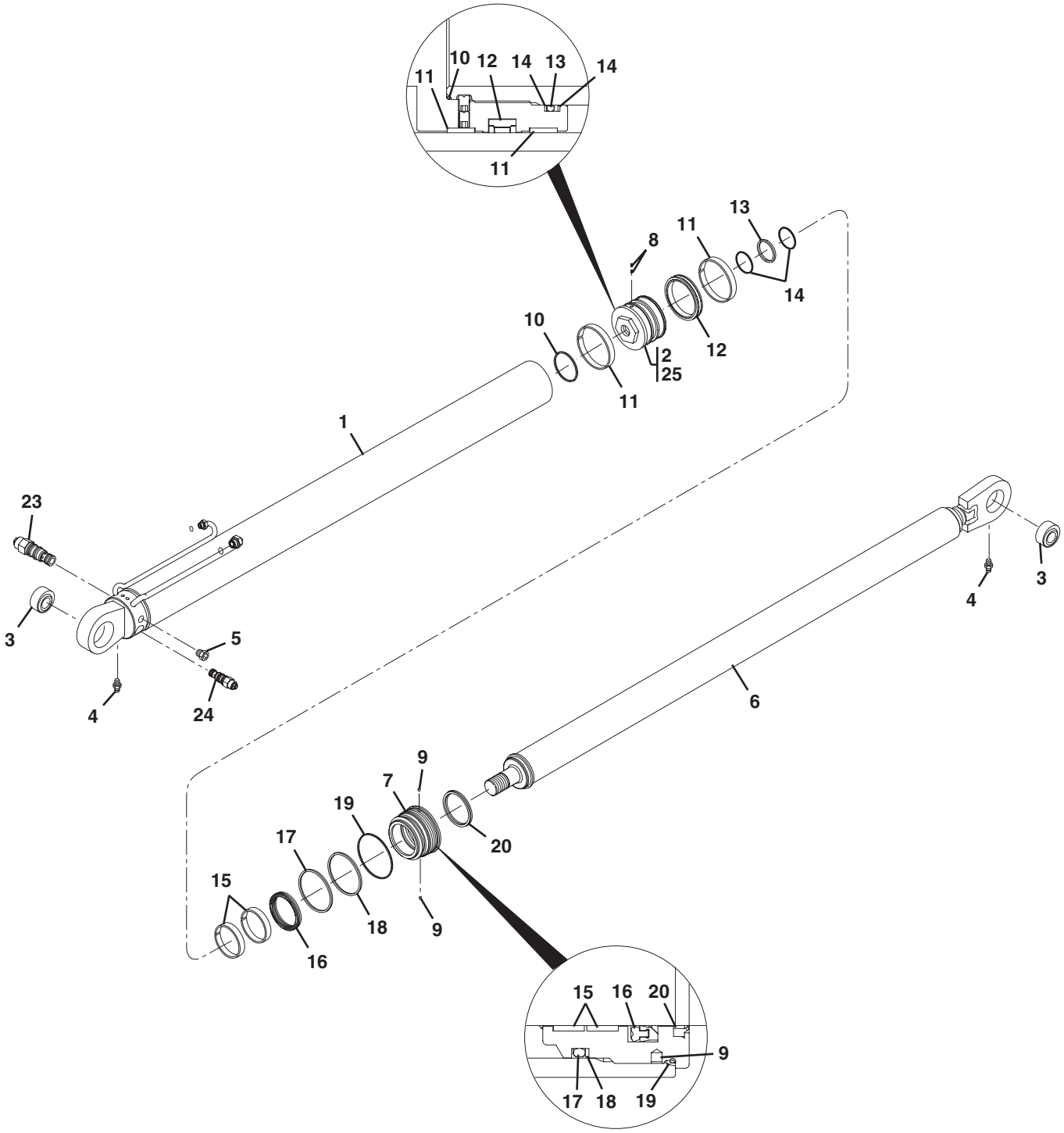

PU2810

Figure 9-2 Lift/Lower Cylinder

Item	Part Number	Qty.	Description	Rev.
		1	LIFT/LOWER CYLINDER, (for replacement order lift/lower cylinder 2717242)	
1		1	WELDMENT TUBE	
2	8036242	1	PISTON, (torque to 500-600 lb-ft)	
3	8036236	2	SPHERICAL BEARING, w/SEALS	
4	8520013	2	LUBE FITTING, 1/8-27	
5	8035785	2	HOLLOW HEX PLUG, #4, (torque to 10-12 lb-ft)	
6	8036640	1	WELDMENT ROD	
7	8036241	1	HEAD GLAND, (torque to 500-600 lb-ft)	
8	8036238	2	SET SCREW, .313-18X.44	
9		2	LOCKING INSERT	
10		1	O-RING	
11		2	PRECISION WEARBAND	
12		1	CAPPED T SEAL	
13		1	O-RING	
14		2	DYNAMIC BACKUP RING	
15		2	PECISION WEARBAND	
16		1	DZR SEAL	
17		1	O-RING	
18		1	BACKUP RING	
19		1	O-RING	
20		1	WIPER SEAL	
21		1	O-RING	
22		1	O-RING	
23	8036596	1	COUNTERBALANCE VALVE, 4000 PSI, (275 bar), (torque to 40-45 lb-ft)	
	8205656	1	SEAL KIT	
24	8036229	1	PO CHECK VALVE, (torque to 40-45 lb-ft)	
	8205656	1	SEAL KIT	
25	8526011	AR	LOCTITE, #271, (apply to item 2)	
	8036644	1	SEAL KIT, (includes items 9 thru 22)	

Figure 9-2 Lift/Lower Cylinder

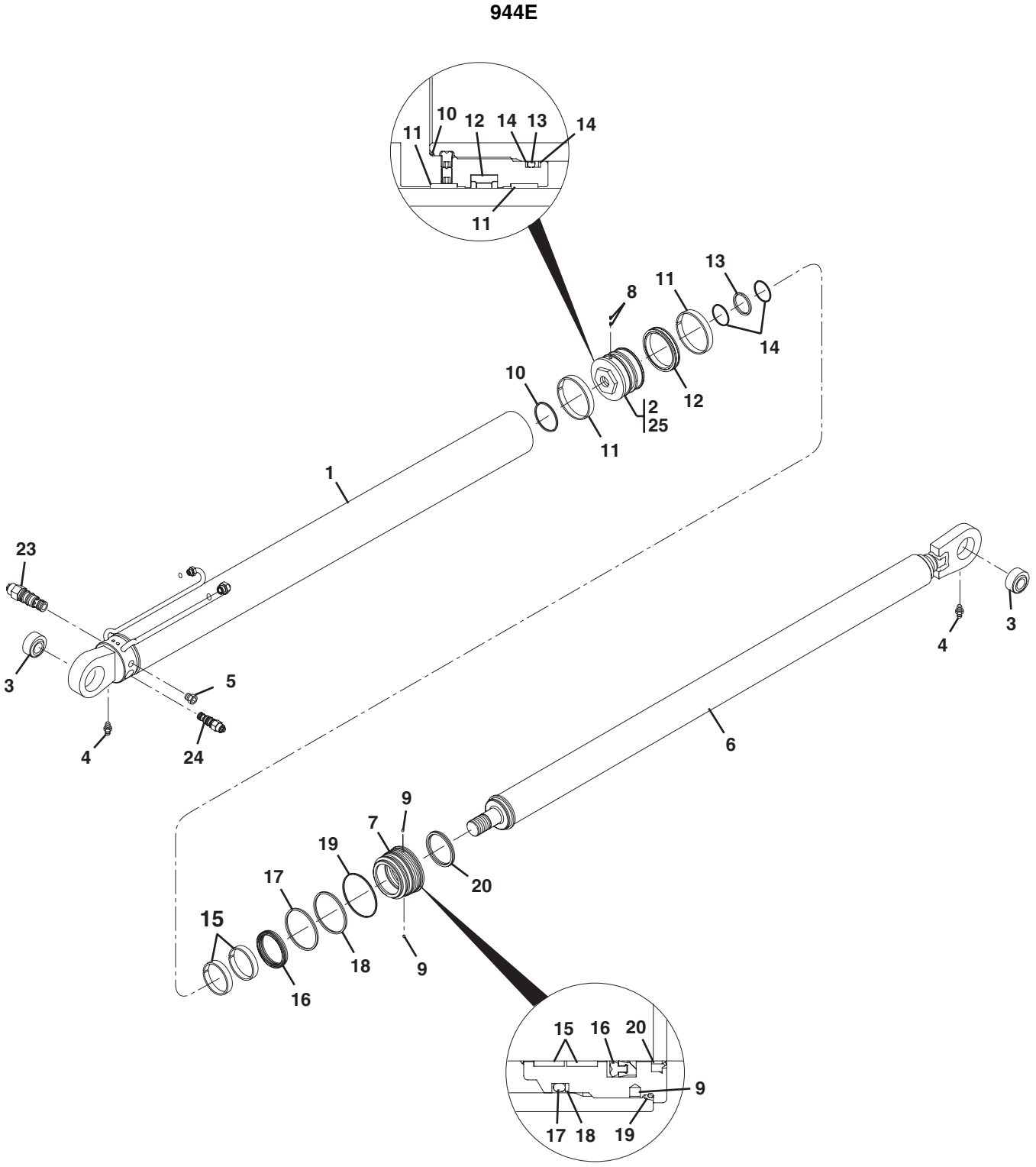

Figure 9-2 Lift/Lower Cylinder

Item	Part Number	Qty.	Description	Rev.
	2717242	1	LIFT/LOWER CYLINDER, (includes items 1 thru 24)	
1		1	WELDMENT TUBE	
2	8036242	1	PISTON, (torque to 500-600 lb-ft)	
3	8036236	2	SPHERICAL BEARING, w/SEALS	
4	8520013	2	LUBE FITTING, 1/8-27	
5	8035785	2	HOLLOW HEX PLUG, #4, (torque to 10-12 lb-ft)	
6	8036640	1	WELDMENT ROD	
7	8036241	1	HEAD GLAND, (torque to 500-600 lb-ft)	
8	8036238	2	SCREW SET, .313-18X.44	
9		2	LOCKING INSERT	
10		1	O-RING	
11		2	PECISION WEARBAND	
12		1	CAPPED T SEAL	
13		1	O-RING	
14		2	DYNAMIC BACKUP RING	
15		2	PRECISION WEARBAND	
16		1	DZR SEAL	
17		1	O-RING	
18		1	BACKUP RING	
19		1	O-RING	
20		1	WIPER SEAL	
21		1	O-RING	
22		1	O-RING	
23	7029514	1	COUNTERBALANCE VALVE, 4000 PSI, (275 bar), (torque to 40-45 lb-ft)	
	7029517	1	SEAL KIT	
24	7029513	1	PO CHECK VALVE, (torque to 40-45 lb-ft)	
	7029518	1	SEAL KIT	
25	8526011	AR	LOCTITE, #271, (apply to item 2)	
	8036644	1	SEAL KIT, (includes items 9 thru 22)	

Figure 9-3 Attachment Tilt Cylinder

644E

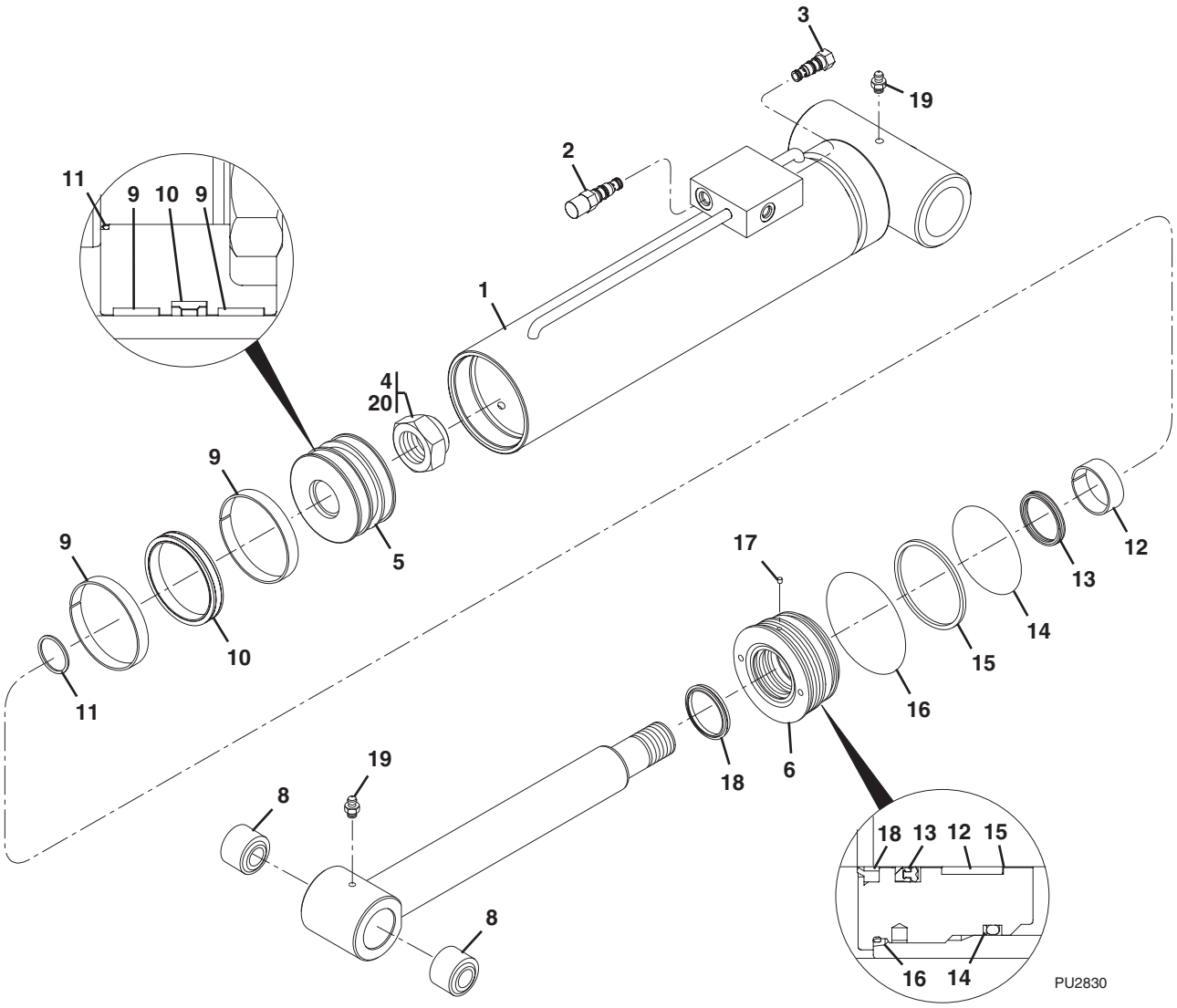

Figure 9-3 Attachment Tilt Cylinder

Item	Part Number	Qty.	Description	Rev.
	2716864	1	ATTACHMENT TILT CYLINDER, (includes items 1 thru 19)	
1		1	TUBE WELDMENT	
2	8036750	1	PO CHECK VALVE, (torque to 30-35 lb-ft)	
	2900770	1	SEAL KIT	
3	8035321	1	COUNTERBALANCE VALVE - CCC PRESET AT 4000 PSI, (275 bar), (torque to 30-35 lb-ft)	
	8035327	1	SEAL KIT	
4	8035322	1	HEX LOCKNUT, 1.5-12, (torque to 1100-1250 lb-ft)	
5	8035323	1	PISTON	
6	8035324	1	HEAD GLAND, (torque to 300-400 lb-ft)	
7	8036577	1	WELDMENT ROD	
8	7300536	2	HARDENED STEEL BEARING	
9		2	PRECISION WEARBAND	
10		1	CAPPED T-SEAL	
11		1	O-RING	
12		1	PRECISION WEARBAND	
13		1	DEEP Z-SEAL - w/ROD BACK-UP	
14		1	RING, BACK-UP	
15		1	O-RING	
16		1	O-RING	
17		1	LOCKING INSERT	
18		1	WIPER SEAL	
19	8520013	2	LUBE FITTING, 1/8-27	
20	8526011	AR	LOCTITE, #271, (apply to item 4)	
	8035326	1	SEAL KIT, (includes items 9 thru 18)	

Figure 9-3 Attachment Tilt Cylinder

944E

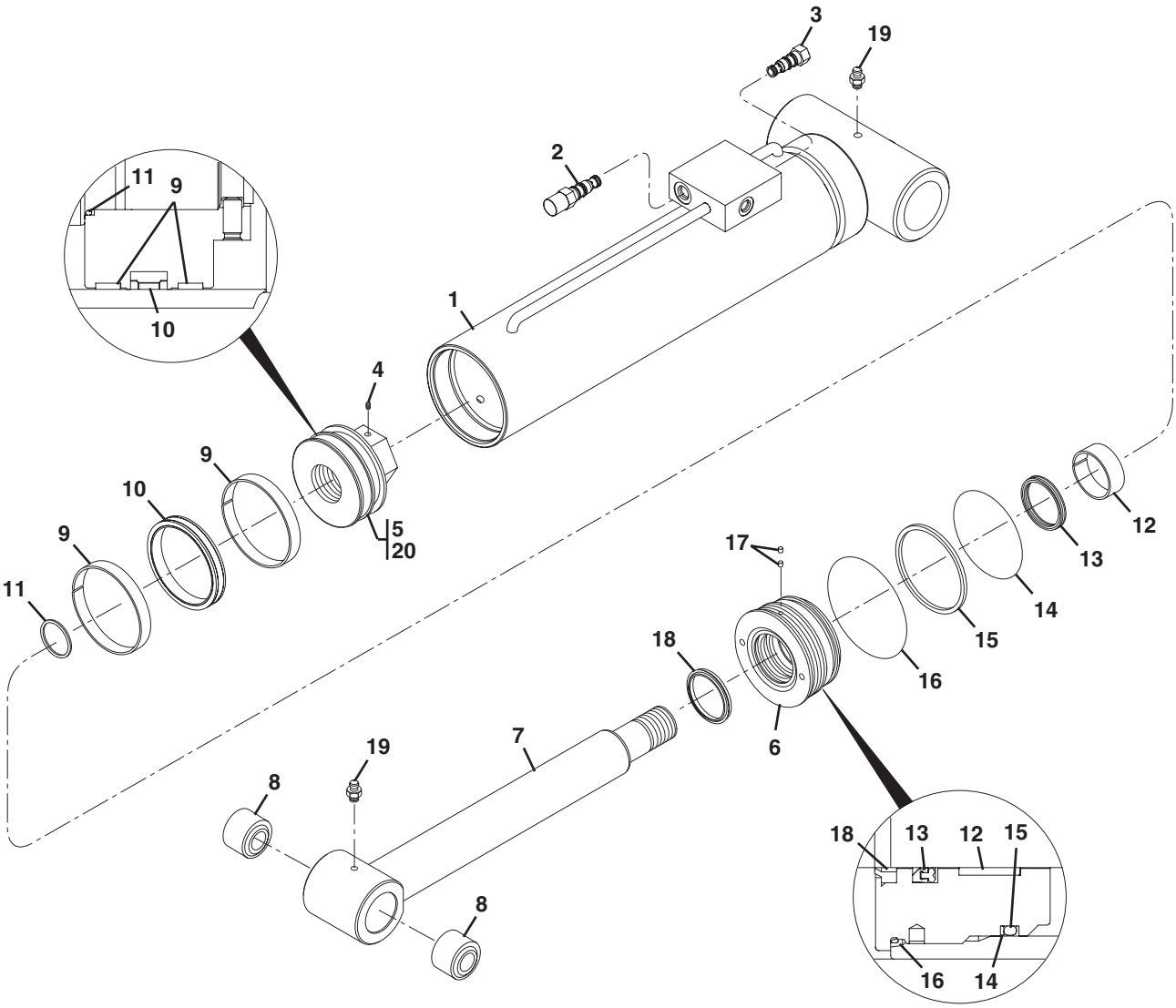

PU2840

Figure 9-3 Attachment Tilt Cylinder

Item	Part Number	Qty.	Description	Rev.
	2716894	1	ATTACHMENT TILT CYLINDER, (includes items 1 thru 19)	
1	70022384	1	TUBE WELDMENT, (includes item 2)	
2	8036750	1	PO CHECK VALVE, (torque to 30-35 lb-ft)	
	2900770	1	SEAL KIT	
3	8035321	1	COUNTERBALANCE VALVE - CCC PRESET AT 4000 PSI, (275 bar), (torque to 30-35lb-ft)	
	8035327	1	SEAL KIT	
4	8036629	1	SCREW, SET, 3/8-16X3/4, (loctite & torque to 35-40 lb-ft)	
5	8036632	1	PISTON, (torque to 1800-2000 lb-ft)	
6	8036631	1	HEAD GLAND, (torque to 300-400 lb-ft)	
7	8036630	1	WELDMENT ROD	
8	7300536	2	HARDENED STEEL BEARING	
9		2	PRECISION WEARBAND	
10		1	CAPPED T-SEAL	
11		1	O-RING	
12		1	PRECISION WEARBAND	
13		1	DEEP Z-SEAL - w/ROD BACK-UP	
14		1	BACK-UP RING	
15		1	O-RING	
16		1	O-RING	
17		2	LOCKING INSERT	
18		1	WIPER SEAL	
19	8520013	2	LUBE FITTING, 1/8-27	
20	8526011	AR	LOCTITE, #271, (apply to item 5)	
	8036547	1	SEAL KIT, (includes items 9 thru 18)	

Figure 9-4 Frame Sway Cylinder

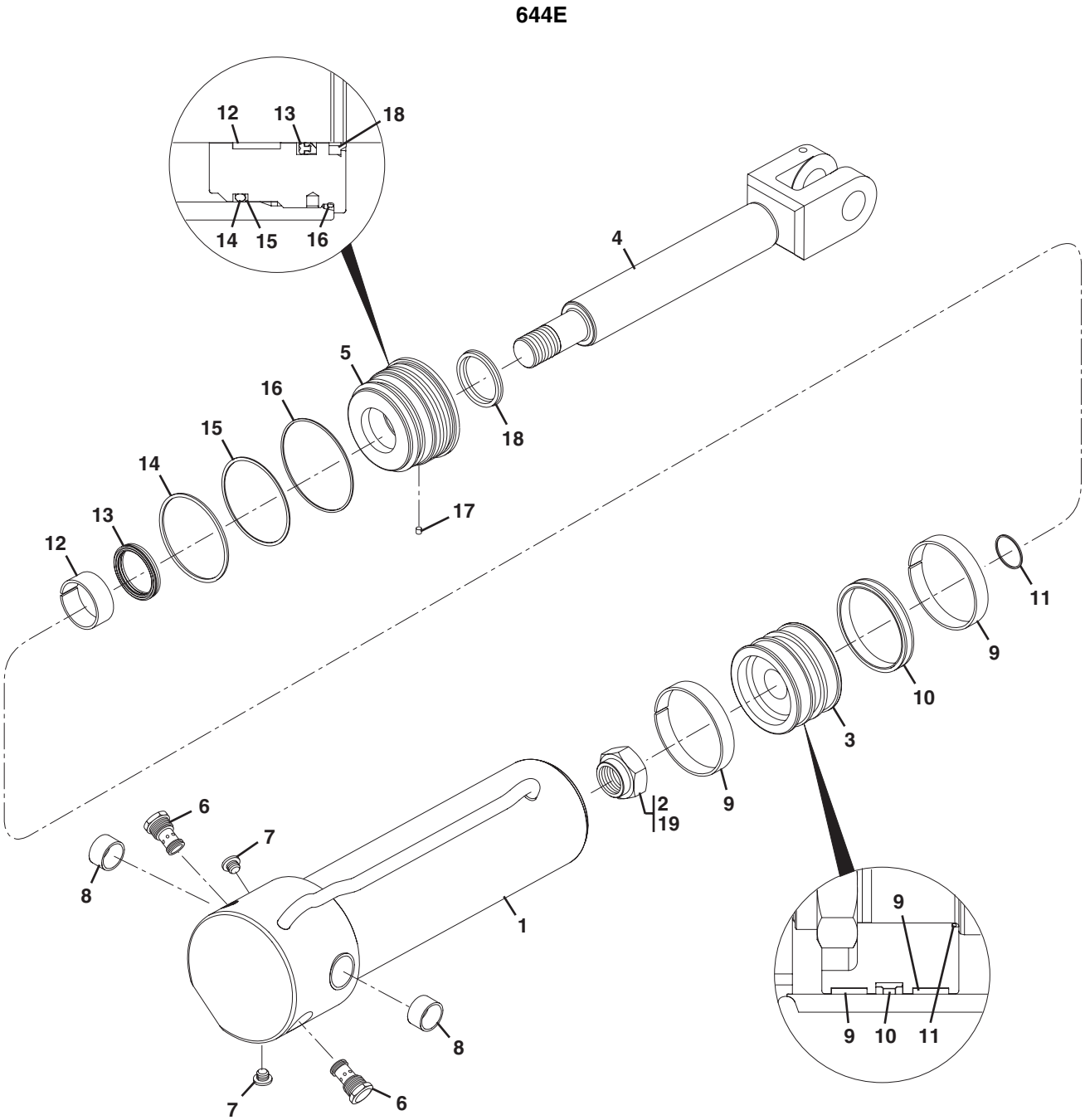

Figure 9-4 Frame Sway Cylinder

Item	Part Number	Qty.	Description	Rev.
	2717012	1	FRAME SWAY CYLINDER, (includes items 1 thru 18)	
1		1	WELDMENT TUBE	
2	8035322	1	HEX LOCKNUT, 1.50-12, (torque to 1840-2025 lb-ft)	
3	8035323	1	PISTON	
4	8036584	1	WELDMENT ROD	
5	8036585	1	HEAD GLAND, (torque to 300-400 lb-ft)	
6	8035757	2	PO CHECK VALVE - SERIES 10, (torque to 30-35 lb-ft)	
	8036739	1	SEAL KIT	
7	8035785	2	HOLLOW HEX PLUG, #4, (loctite #243 & torque to 10-12 lb-ft)	
8	8036583	2	POLYLUBE JOURNAL BEARING	
9		2	PRECISION WEARBAND	
10		1	CAPPED T-SEAL, TYPE 730	
11		1	O-RING	
12		1	PRECISION WEARBAND	
13		1	DEEP Z-SEAL - w/ROD BACK-UP	
14		1	O-RING	
15		1	BACK-UP RING	
16		1	O-RING	
17		1	LOCKING INSERT	
18		1	WIPER SEAL	
19	8526011	AR	LOCTITE, #271, (apply to item 2)	
	8036477	1	SEAL KIT, (includes items 9 thru 18)	

Figure 9-4 Frame Sway Cylinder

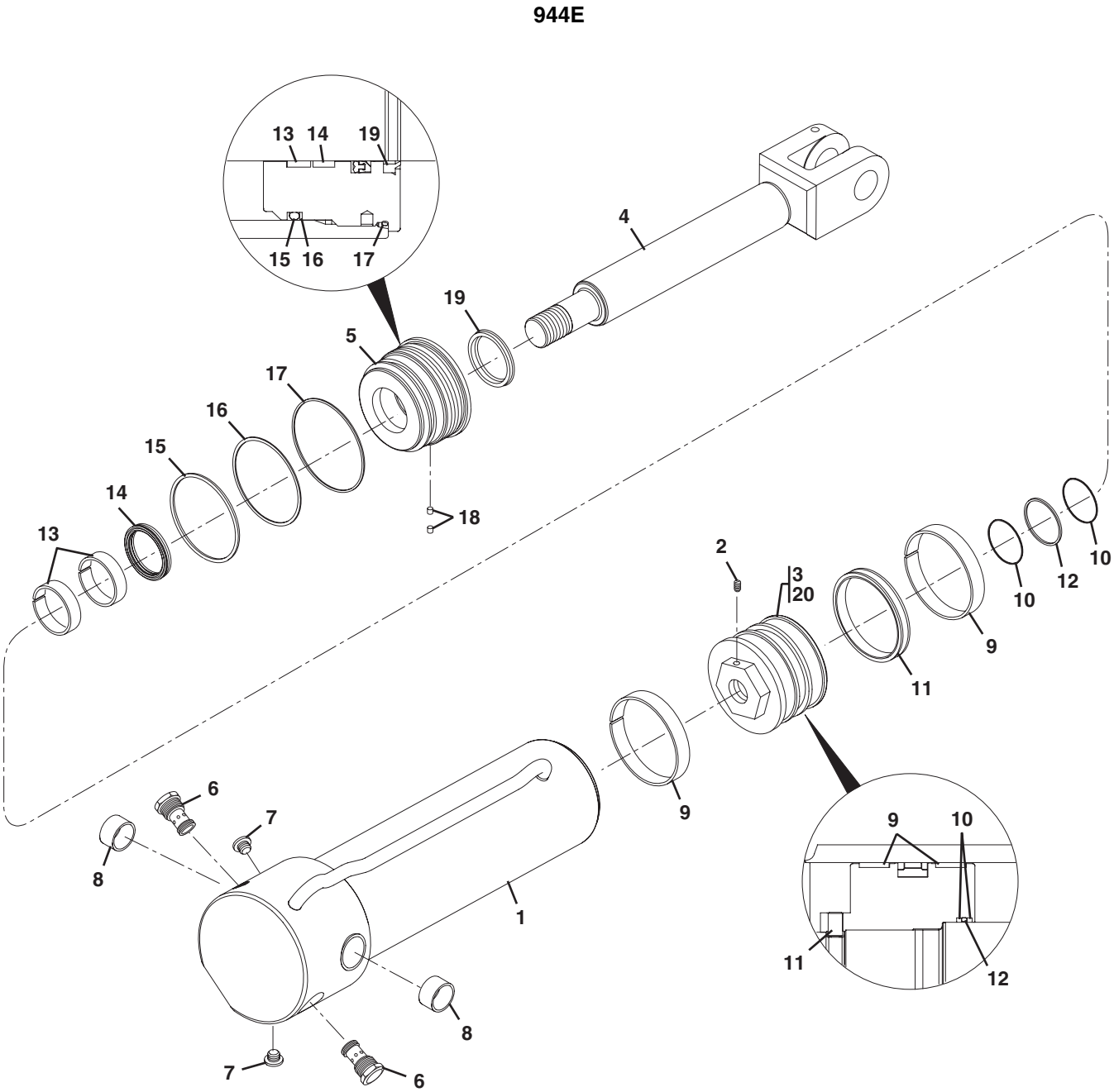

Figure 9-4 Frame Sway Cylinder

Item	Part Number	Qty.	Description	Rev.
	2716906	1	FRAME SWAY CYLINDER, (includes items 1 thru 19)	
1		1	WELDMENT TUBE	
2	8036633	1	SET SCREW, 3/8-16X.63	
3	8036636	1	PISTON, (torque to 1840-2025 lb-ft)	
4	8036634	1	WELDMENT ROD	
5	8036635	1	HEAD GLAND, (torque to 300-400 lb-ft)	
6	8035757	2	PO CHECK VALVE - SERIES 10, (torque to 30-35 lb-ft)	
	8036739	1	SEAL KIT	
7	8035785	2	HOLLOW HEX PLUG, #4, (loctite #243 & torque to 10-12 lb-ft)	
8	8036583	2	POLYLUBE JOURNAL BEARING	
9		2	PRECISION WEARBAND	
10		2	DYNAMIC BACKUP RING	
11		1	CAPPED T-SEAL	
12		1	O-RING	
13		2	PRECISION WEARBAND	
14		1	DEEP Z-SEAL - w/ROD BACK-UP	
15		1	O-RING	
16		1	BACK-UP RING	
17		1	O-RING	
18		2	LOCKING INSERT	
19		1	WIPER SEAL	
20	8526011	AR	LOCTITE, #271, (apply to item 3)	
	8036543	1	SEAL KIT, (includes items 9 thru 19)	

Figure 9-4 Frame Sway Cylinder

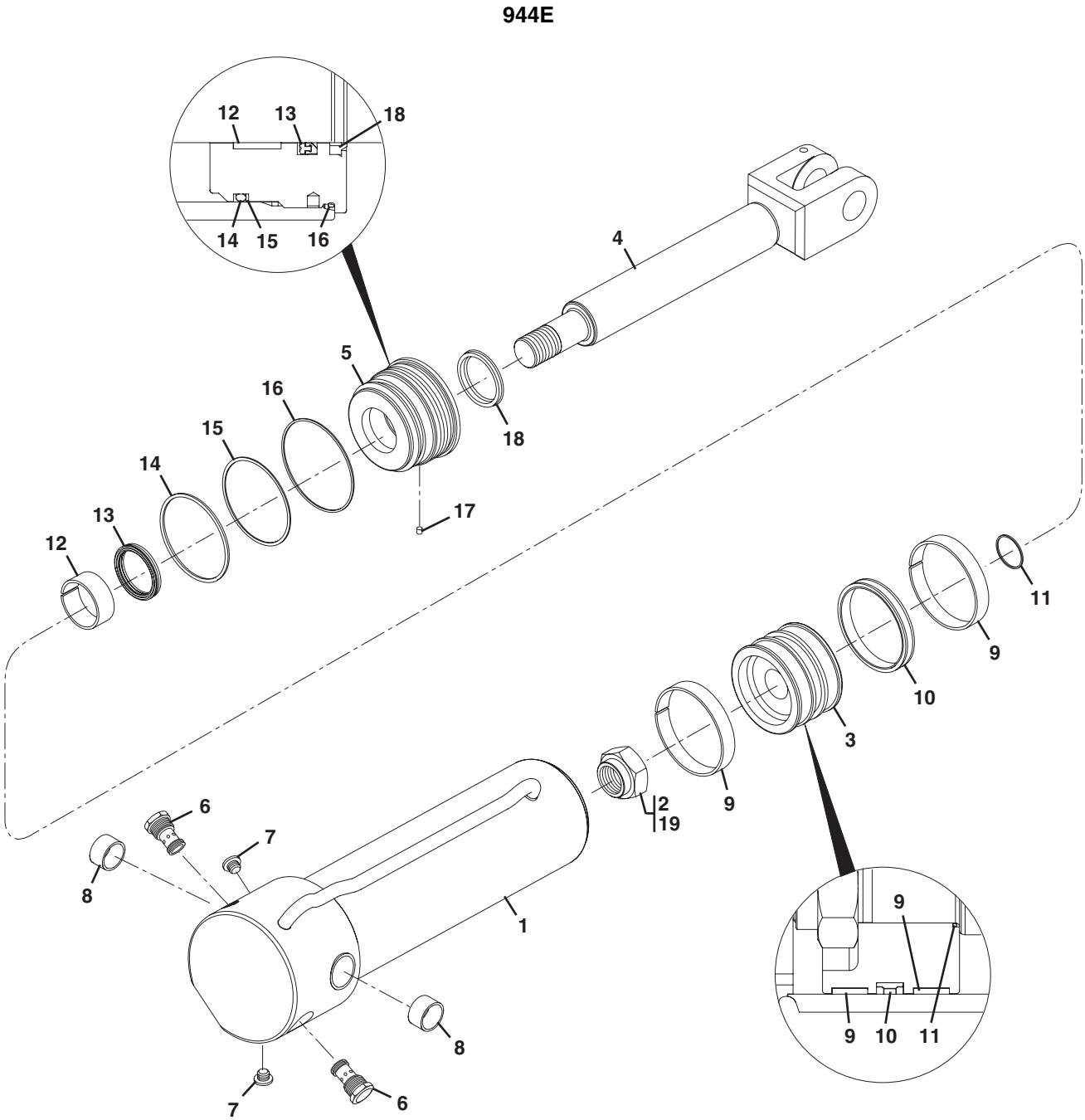

Figure 9-4 Frame Sway Cylinder

Item	Part Number	Qty.	Description	Rev.
	2717012	1	FRAME SWAY CYLINDER, (includes items 1 thru 18)	
1		1	WELDMENT TUBE	
2	8035322	1	HEX LOCKNUT, 1.50-12, (torque to 1840-2025 lb-ft)	
3	8035323	1	PISTON	
4	8036584	1	WELDMENT ROD	
5	8036585	1	HEAD GLAND, (torque to 300-400 lb-ft)	
6	8035757	2	PO CHECK VALVE - SERIES 10, (torque to 30-35 lb-ft)	
	8036739	1	SEAL KIT	
7	8035785	2	HOLLOW HEX PLUG, #4, (loctite #243 & torque to 10-12 lb-ft)	
8	8036583	2	POLYLUBE JOURNAL BEARING	
9		2	PRECISION WEARBAND	
10		1	CAPPED T-SEAL, TYPE 730	
11		1	O-RING	
12		1	PRECISION WEARBAND	
13		1	DEEP Z-SEAL - w/ROD BACK-UP	
14		1	O-RING	
15		1	BACK-UP RING	
16		1	O-RING	
17		1	LOCKING INSERT	
18		1	WIPER SEAL	
19	8526011	AR	LOCTITE, #271, (apply to item 2)	
	8036477	1	SEAL KIT, (includes items 9 thru 18)	

Figure 9-5 Stabil-Trak Cylinder

644E

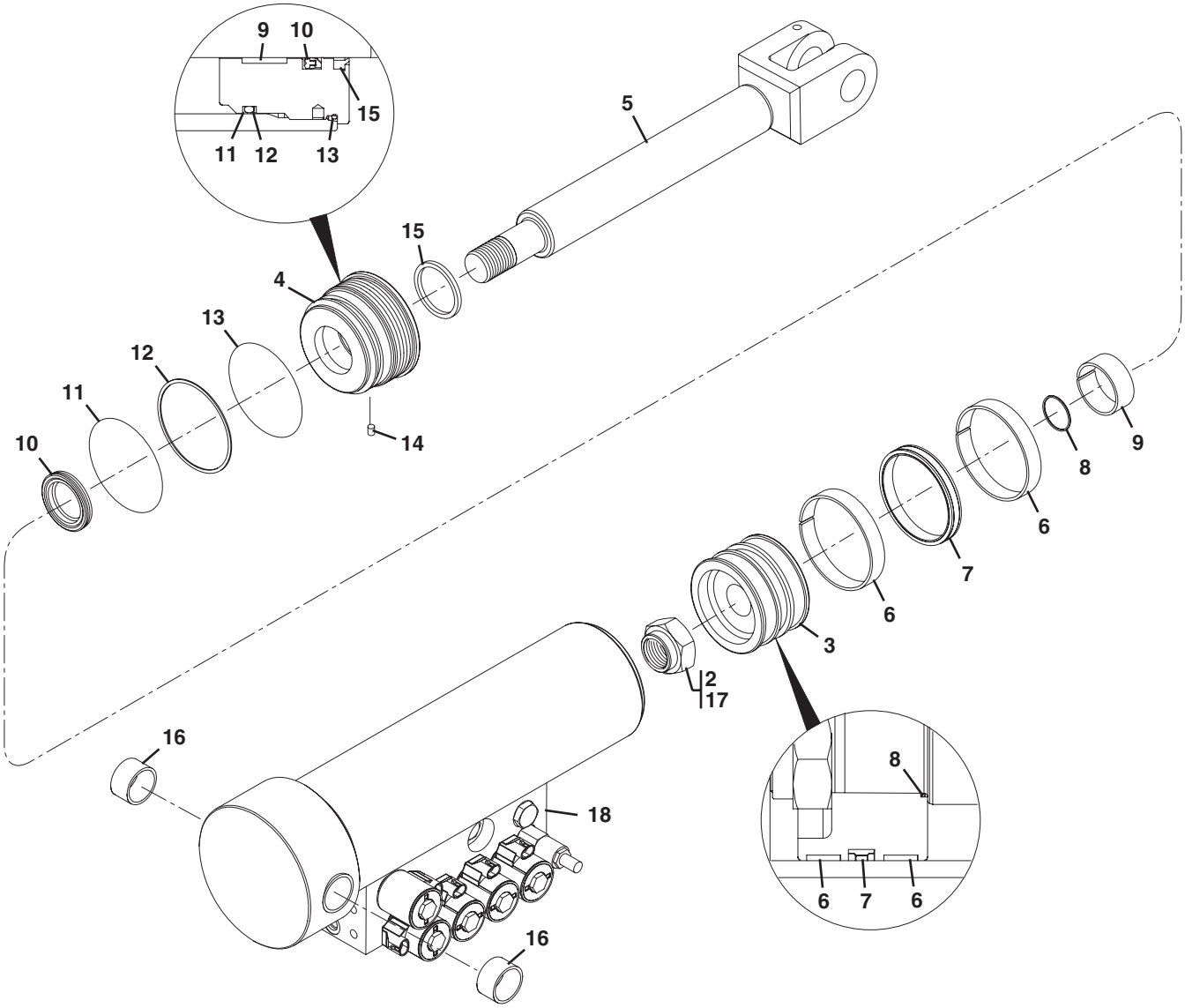

PU2870

Figure 9-5 Stabil-Trak Cylinder

Item	Part Number	Qty.	Description	Rev.
	2717013	1	STABIL-TRAK CYLINDER, (includes items 1 thru 16 on Figure 9-5 & all items on Figure 9-13)	
1		1	WELDMENT TUBE	
2	8035322	1	LOCKNUT, 1.50-12, (loctite & torque to 1840-2025 lb-ft)	
3	8035323	1	PISTON	
4	8036585	1	HEAD GLAND, (torque to 300-400 lb-ft)	
5	8036584	1	WELDMENT ROD	
6		2	PRECISION WEARBAND	
7		1	CAPPED T-SEAL	
8		1	O-RING	
9		1	PRECISION WEARBAND	
10		1	DEEP Z-SEAL - w/ROD BACK-UP	
11		1	O-RING	
12		1	DZR SEAL	
13		1	BACK-UP RING	
14		1	LOCKING INSERT	
15		1	WIPER SEAL	
16	8036583	2	POLYLUBE JOURNAL BEARING	
17	8526011	AR	LOCTITE, #271, (apply to item 2)	
18		Ref	STABIL-TRAK CYLINDER VALVE, (see Figure 9-13 for details)	
	8036477	1	SEAL KIT, (includes items 6 thru 15)	

Figure 9-5 Stabil-Trak Cylinder

944E

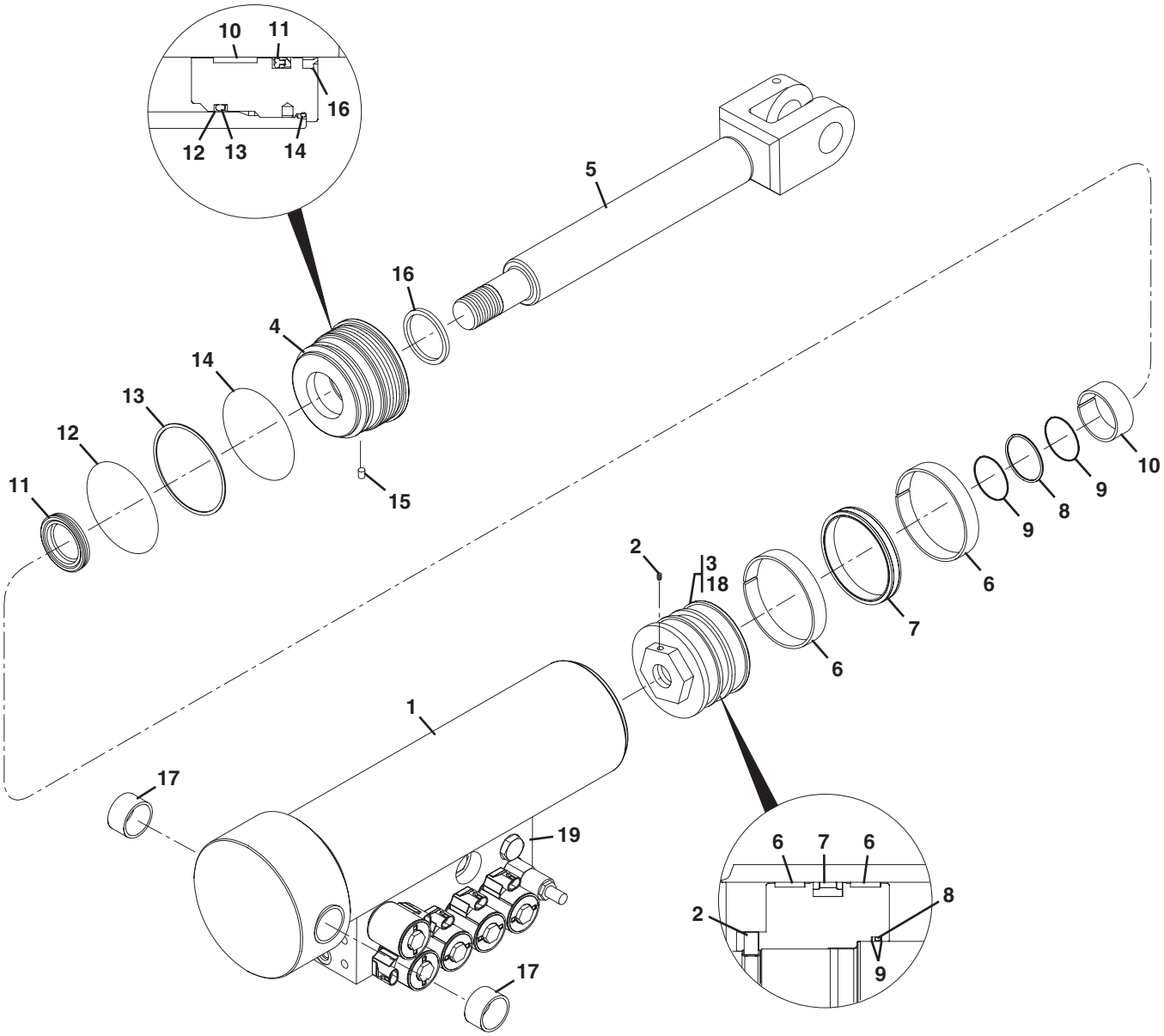

Figure 9-5 Stabil-Trak Cylinder

Item	Part Number	Qty.	Description	Rev.
	2716908	1	STABIL-TRAK CYLINDER, (includes items 1 thru 17 on Figure 9-5 & all items on Figure 9-13)	
1		1	WELDMENT TUBE	
2	8036633	1	SET SCREW, 3/8-16X.63	
3	8036636	1	PISTON, (loctite & torque to 1840-2025 lb-ft)	
4	8036635	1	HEAD GLAND, (torque to 300-400 lb-ft)	
5	8036634	1	WELDMENT ROD	
6		2	PRECISION WEARBAND	
7		1	CAPPED T-SEAL	
8		1	O-RING	
9		2	DYNAMIC BACKUP RING	
10		1	PRECISION WEARBAND	
11		1	DEEP Z-SEAL - w/ROD BACK-UP	
12		1	O-RING	
13		1	DZR SEAL	
14		1	BACK-UP RING	
15		1	LOCKING INSERT	
16		1	WIPER SEAL	
17	8036583	1	POLYLUBE JOURNAL BEARING	
18	8525011	AR	LOCTITE, #271, (apply to item 3)	
19		Ref	STABIL-TRAK CYLINDER VALVE, (see Figure 9-13 for details)	
	8036550	1	SEAL KIT, (includes items 6 thru 16)	

Figure 9-5 Stabil-Trak Cylinder

944E

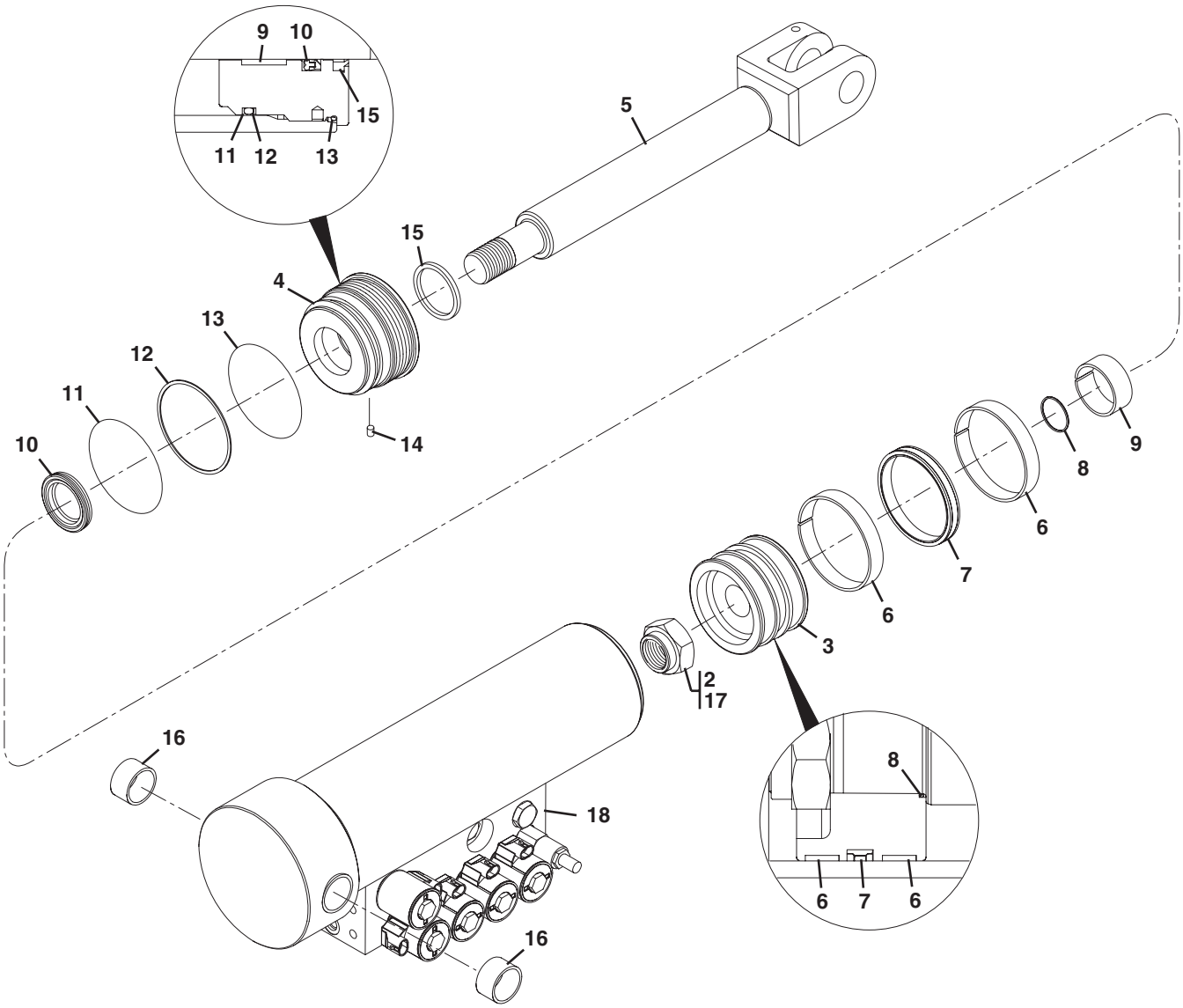

PU2870

Figure 9-5 Stabil-Trak Cylinder

Item	Part Number	Qty.	Description	Rev.
	2717013	1	STABIL-TRAK CYLINDER, (includes items 1 thru 16 on Figure 9-5 & all items on Figure 9-13)	
1		1	WELDMENT TUBE	
2	8035322	1	LOCKNUT, 1.50-12, (loctite & torque to 1840-2025 lb-ft)	
3	8035323	1	PISTON	
4	8036585	1	HEAD GLAND, (torque to 300-400 lb-ft)	
5	8036584	1	WELDMENT ROD	
6		2	PRECISION WEARBAND	
7		1	CAPPED T-SEAL	
8		1	O-RING	
9		1	PRECISION WEARBAND	
10		1	DEEP Z-SEAL - w/ROD BACK-UP	
11		1	O-RING	
12		1	DZR SEAL	
13		1	BACK-UP RING	
14		1	LOCKING INSERT	
15		1	WIPER SEAL	
16	8036583	2	POLYLUBE JOURNAL BEARING	
17	8526011	AR	LOCTITE, #271, (apply to item 2)	
18		Ref	STABIL-TRAK CYLINDER VALVE, (see Figure 9-13 for details)	
	8036477	1	SEAL KIT, (includes items 6 thru 15)	

Figure 9-6 Slave Cylinder

644E

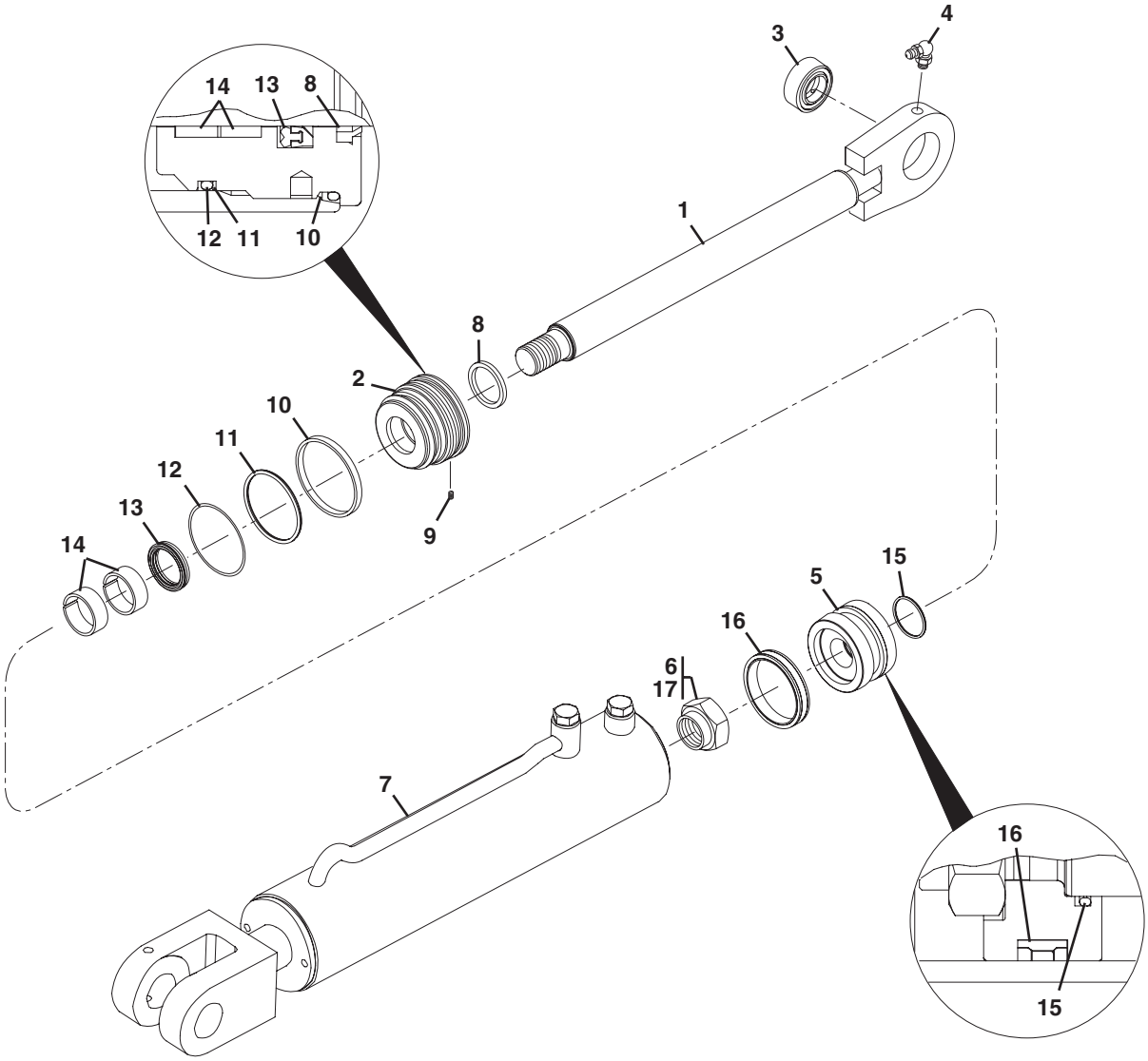

PU2890

Figure 9-6 Slave Cylinder

Item	Part Number	Qty.	Description	Rev.
	2716900	1	SLAVE CYLINDER, (includes items 1 thru 16)	
1	8036600	1	WELDMENT ROD	
2	8035330	1	HEAD GLAND, (torque to 250-300 lb-ft)	
3	8036599	1	SPHERICAL BEARING w/SEALS	
4	8520021	1	LUBE FITTING, 90 DEGREES, 1/8-27	
5	8035329	1	PISTON	
6	8037080	1	HEX LOCKNUT, 1-1/8-12, (loctite & torque to 445-515 lb-ft)	
7		1	TUBE	
8		1	WIPER SEAL	
9		1	LOCKING INSERT	
10		1	O-RING	
11		1	BACK-UP RING	
12		1	O-RING	
13		1	DEEP Z-SEAL - w/ROD BACK-UP	
14		2	PRECISION WEAR	
15		1	O-RING	
16		1	PRECISION WEARBAND	
17	8526011	AR	LOCTITE, #271, (apply to item 6)	
	8035332	1	SEAL KIT, (includes items 8 thru 16)	

Figure 9-6 Slave Cylinder

944E

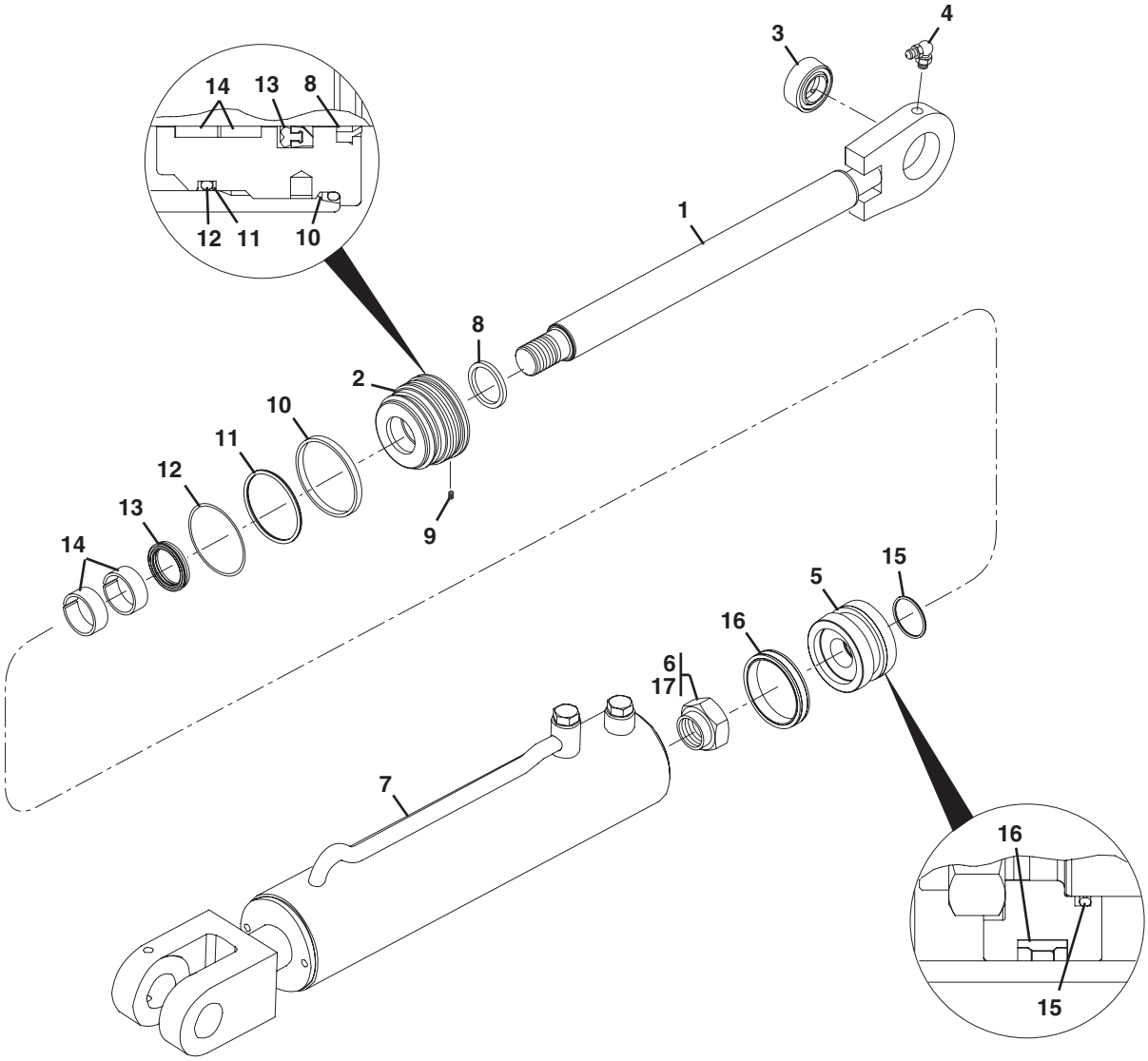

PU2900

Figure 9-6 Slave Cylinder

Item	Part Number	Qty.	Description	Rev.
	2716901	1	SLAVE CYLINDER, (includes items 1 thru 16)	
1	8036641	1	WELDMENT ROD	
2	8036642	1	HEAD GLAND, (torque to 250-300 lb-ft)	
3	8036599	1	SPHERICAL BEARING w/SEALS	
4	8520021	1	LUBE FITTING, 90 DEGREES, DELF TAP 1/8-27	
5	8036643	1	PISTON	
6	8035547	1	HEX LOCKNUT, 1-1/8-12, (loctite & torque to 590-625 lb-ft)	
7		1	TUBE	
8		1	WIPER SEAL	
9		1	LOCKING INSERT	
10		1	O-RING	
11		1	BACK-UP RING	
12		1	O-RING	
13		1	DEEP Z-SEAL - w/ROD BACK-UP	
14		2	PRECISION WEARBAND	
15		1	O-RING	
16		1	PRECISION WEARBAND	
17	8526011	AR	LOCTITE, #271, (apply to item 6)	
	8036551	1	SEAL KIT, (includes items 8 thru 16)	

Figure 9-7 Transfer Cylinder

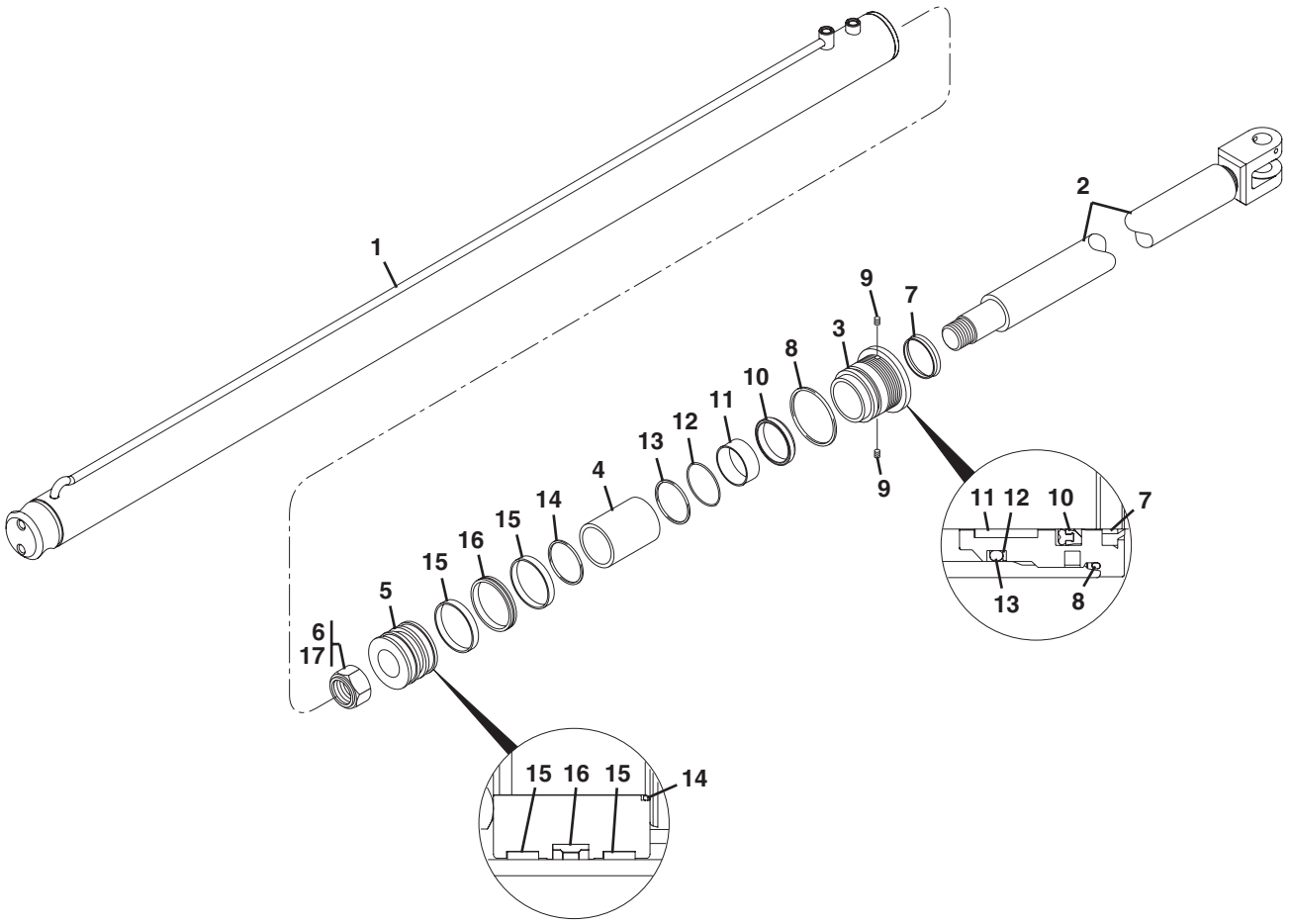

PU2910

Figure 9-7 Transfer Cylinder

Item	Part Number	Qty.	Description	Rev.
	2716850	1	TRANSFER CYLINDER, (includes items 1 thru 16)	
1		1	WELDMENT TUBE	
2	8036586	1	WELDMENT ROD	
3	8036588	1	HEAD GLAND, (torque to 250-300 lb-ft)	
4	8036587	1	ROD SPACER	
5	8036589	1	PISTON	
6	8035322	1	LOCKNUT, 1.50-12, (loctite & torque to 500-550 lb-ft)	
7		1	WIPER SEAL	
8		1	O-RING	
9		2	LOCKING INSERT	
10		1	DZR SEAL	
11		1	PRECISION WEARBAND	
12		1	BACKUP RING	
13		1	O-RING	
14		1	O-RING	
15		2	PECISION WEARBAND	
16		1	CAPPED T-SEAL	
17	8526011	AR	LOCTITE, #271, (apply to item 6)	
	8036476	1	SEAL KIT, (includes items 7 thru 16)	

Figure 9-8 Gear Pump

644E

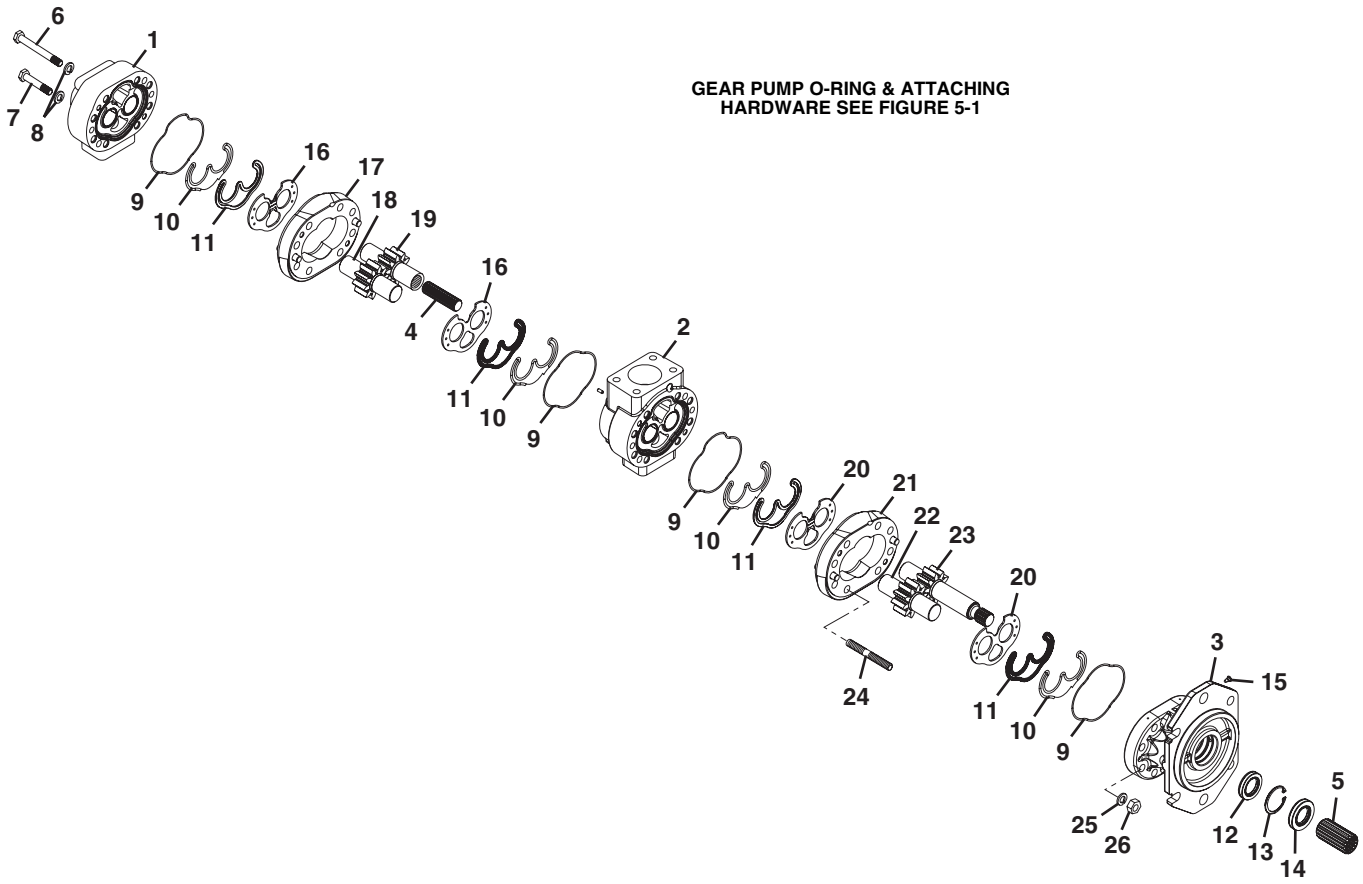

Figure 9-8 Gear Pump

Item	Part Number	Qty.	Description	Rev.
	8440239	1	GEAR PUMP ASSY-TWO STAGE, (includes all items)	
1		1	REAR COVER	
2		1	PORT SECTION	
3		1	“C” MOUNT FRONT COVER	
4	8036485	1	COUPLING	
5	8036541	1	“C” SPLINE COUPLING	
6		4	BOLT, 7/16-14X3.75	
7		4	BOLT, 7/16-14X2.75	
8		8	LOCKWASHER, 7/16	
9		4	O-RING	
10		4	E-RING	
11		4	RETAINING RING	
12		1	INNER SHAFT SEAL	
13		1	SNAP RING	
14		1	OUTER SHAFT SEAL	
15		1	WEEP HOLE PLUG	
16		2	WEAR PLATE	
17		1	CENTER SECTION	
18		1	DRIVEN GEAR	
19		1	REAR DRIVE GEAR	
20		2	WEAR PLATE	
21		1	CENTER SECTION	
22		1	DRIVEN GEAR	
23		1	“B” SPLINE DRIVE GEAR	
24		8	STUD, 7/16X3.51	
25		8	LOCKWASHER, 7/16	
26		8	NUT, 7/16-20X3/8	
	8036481	1	GEAR PUMP SEAL KIT, (includes items 9 thru 15)	
	8036513	1	BOLT KIT, (includes items 6 thru 8)	
	8036524	1	REAR SECTION KIT, (includes items 16 thru 19)	
	8036483	1	FRONT SECTION KIT, (includes items 20 thru 23)	
	8036484	1	FRONT STUD KIT, (includes items 24 thru 26)	

Figure 9-8 Gear Pump

944E

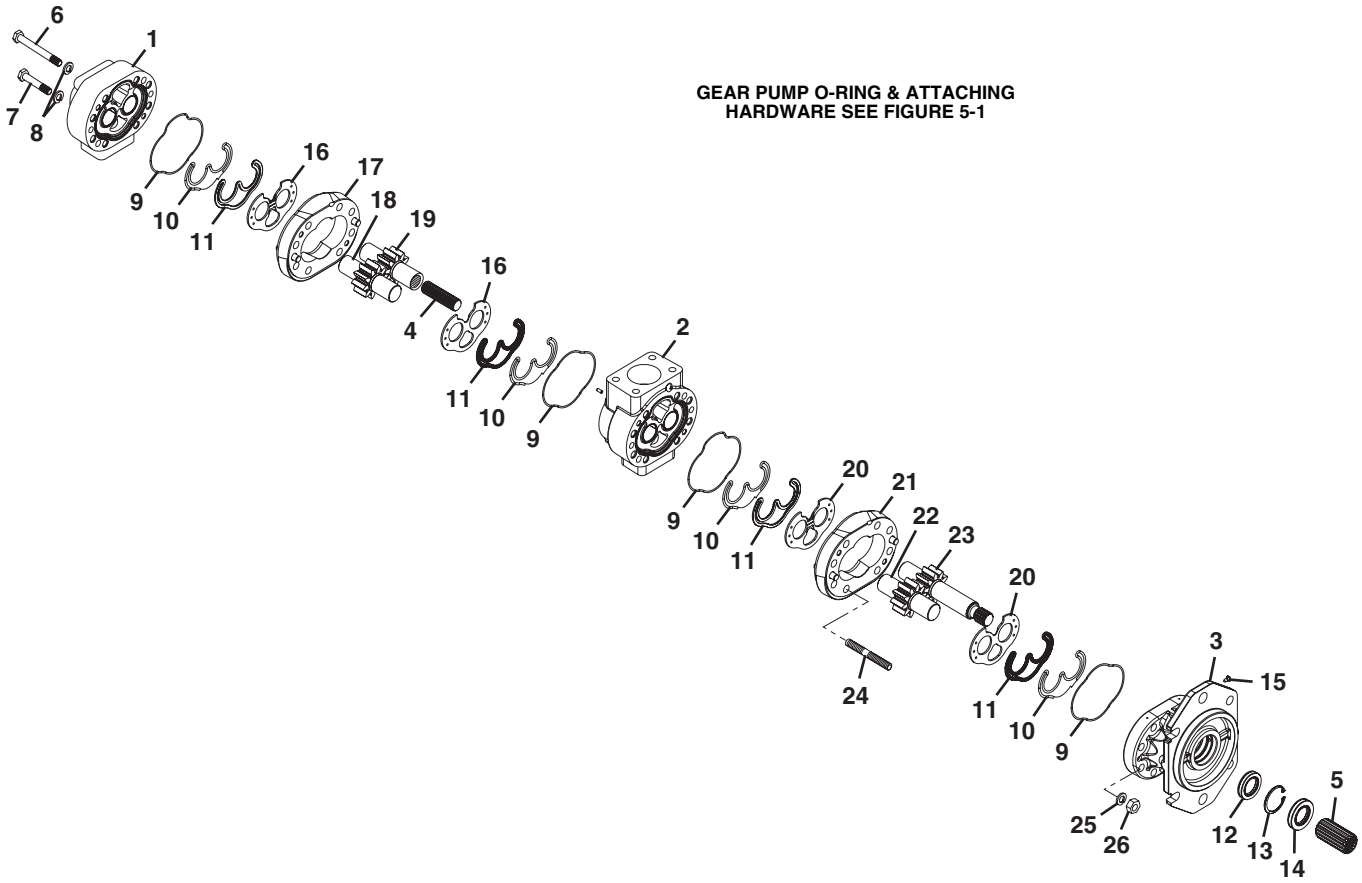

PU3110

Figure 9-8 Gear Pump

Item	Part Number	Qty.	Description	Rev.
	8440240	1	GEAR PUMP ASSY-TWO STAGE, (includes all items)	
1		1	REAR COVER	
2		1	PORT SECTION	
3		1	“C” MOUNT FRONTCOVER	
4	8036485	1	COUPLING	
5	8036541	1	“C” SPLINE COUPLING	
6		4	BOLT, 7/16-14X4.00	
7		4	BOLT, 7/16-14X2.75	
8		8	LOCKWASHER, 7/16	
9		4	O-RING	
10		4	E-RING	
11		4	RETAINING RING	
12		1	INNER SHAFT SEAL	
13		1	SNAP RING	
14		1	OUTER SHAFT SEAL	
15		1	WEEP HOLE PLUG	
16		2	WEAR PLATE	
17		1	CENTER SECTION	
18		1	DRIVEN GEAR	
19		1	REAR DRIVE GEAR	
20		2	WEAR PLATE	
21		1	CENTER SECTION	
22		1	DRIVEN GEAR	
23		1	“B” SPLINE DRIVE GEAR	
24		8	STUD, 7/16X3.51	
25		8	LOCKWASHER, 7/16	
26		8	NUT, 7/16-20X3/8	
	8036481	1	GEAR PUMP SEAL KIT, (includes items 9 thru 15)	
	8036480	1	BOLT KIT, (includes items 6 thru 8)	
	8036482	1	REAR SECTION KIT, (includes items 16 thru 19)	
	8036483	1	FRONT SECTION KIT, (includes items 20 thru 23)	
	8036484	1	FRONT STUD KIT, (includes items 24 thru 26)	

Figure 9-9 Main Control Valve

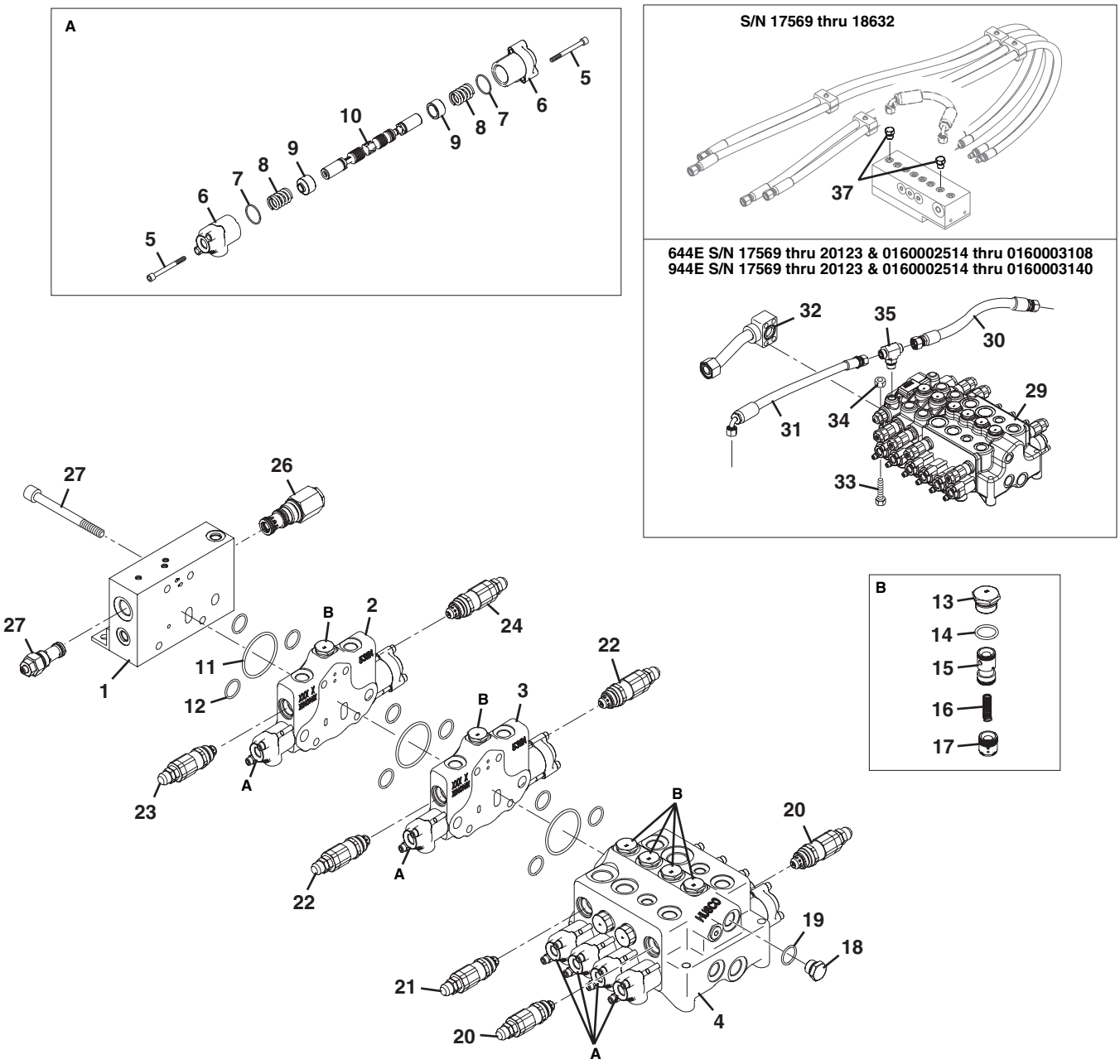

Figure 9-9 Main Control Valve

Item	Part Number	Qty.	Description	Rev.
		1	MAIN CONTROL VALVE ASSY, (includes items 1 thru 27)	
1	8036504	1	INLET SECTION ASSY, (includes item 26)	
2	8036510	1	TRANSFER CARRIAGE SECTION ASSY, (includes items 5 thru 17)	
3	8036511	1	AUXILIARY SECTION ASSY, (includes items 5 thru 17)	
4		1	LIFT/LOWER, EXTEND/RETRACT, FRAME SWAY & ATTACHMENT TILT MONO BLOCK	
5		2	SOCKET HD CAPSCREW	
6		1	SPOOL CAP	
7	10837924	1	O-RING	
8		1	SPRING	
9		1	SPRING SEAT	
10		1	SPOOL	
11		3	O-RING	
12		9	O-RING	
13	8036512	6	PLUG ASSY, (includes item 14)	
14	8036513	6	O-RING	
15		6	SPOOL-ISOLATOR	
16	8036514	6	SPRING	
17		6	SPOOL-COMPENSATOR	
18	8036516	1	PLUG, (includes item 19)	
19	8036517	1	O-Ring	
20	8036523	2	RELIEF CARTRIDGE, 4000 PSI, (275 Bar)	
	8035855	1	SEAL KIT	
21	8036519	1	RELIEF CARTRIDGE, 2400 PSI, (165 Bar)	
	8036185	1	SEAL KIT	
22	8036520	2	RELIEF CARTRIDGE, 2650 PSI, (182 Bar)	
	8036185	1	SEAL KIT	
23	8036521	1	RELIEF CARTRIDGE, 3700 PSI, (255 Bar)	
	8036185	1	SEAL KIT	
24	8036518	1	RELIEF CARTRIDGE, 2180 PSI, (150 Bar)	
	8036185	1	SEAL KIT	
25	8036507	1	REGULATOR ASSY 3275 PSI, (226 Bar)	
	8036508	1	SEAL KIT	
26	8036505	1	UNLOADER CARTRIDGE ASSY	
	8036506	1	SEAL KIT	
27	8036509	4	SOCKET HD CAPSCREW, (metric)	
28	4150512	1	MAIN VALVE SERVICE KIT PROCEDURE, (not shown)	
29	8902329	1	PILOT ACCUATION MAIN CONTROL VALVE ASSY	
30	2717193	1	HOSE ASSY	
31	2717194	1	HOSE ASSY	
32	7301843	1	PUMP TEE TUBE ASSY	
33	8303550	1	HEX HD CAPSCREW, M8-1.25X60mm, PC8.8	
34	8305654	1	HEX LOCKNUT, M8-1.25	
35	8770112	1	BRANCH TEE	
36	7301831	1	INSTRUCTION SHEET FOR REPLACING JUMPER LOOP HOSE W/PRESSURE BLEED PLUGS, (not shown), **(S/N 17569 thru 18633)**	
37	7301301	2	PRESSURE BLEED PLUG, **(S/N 17569 thru 18633)**	

Figure 9-9 Main Control Valve (Continued)

Item	Part Number	Qty.	Description	Rev.
	8036515	12	SPOOL CAP KIT, (includes items 5 thru 9)	
	8036503	1	SECTION ASSEMBLIES SEAL KIT, (includes items 11 & 12)	
	2915007	1	MAIN CONTROL VALVE REPLACEMENT KIT, (includes items 28 thru 37), (one time replacement only)	

Figure 9-9 Main Control Valve (Continued)

Item	Part Number	Qty.	Description	Rev.

Figure 9-9 Main Control Valve

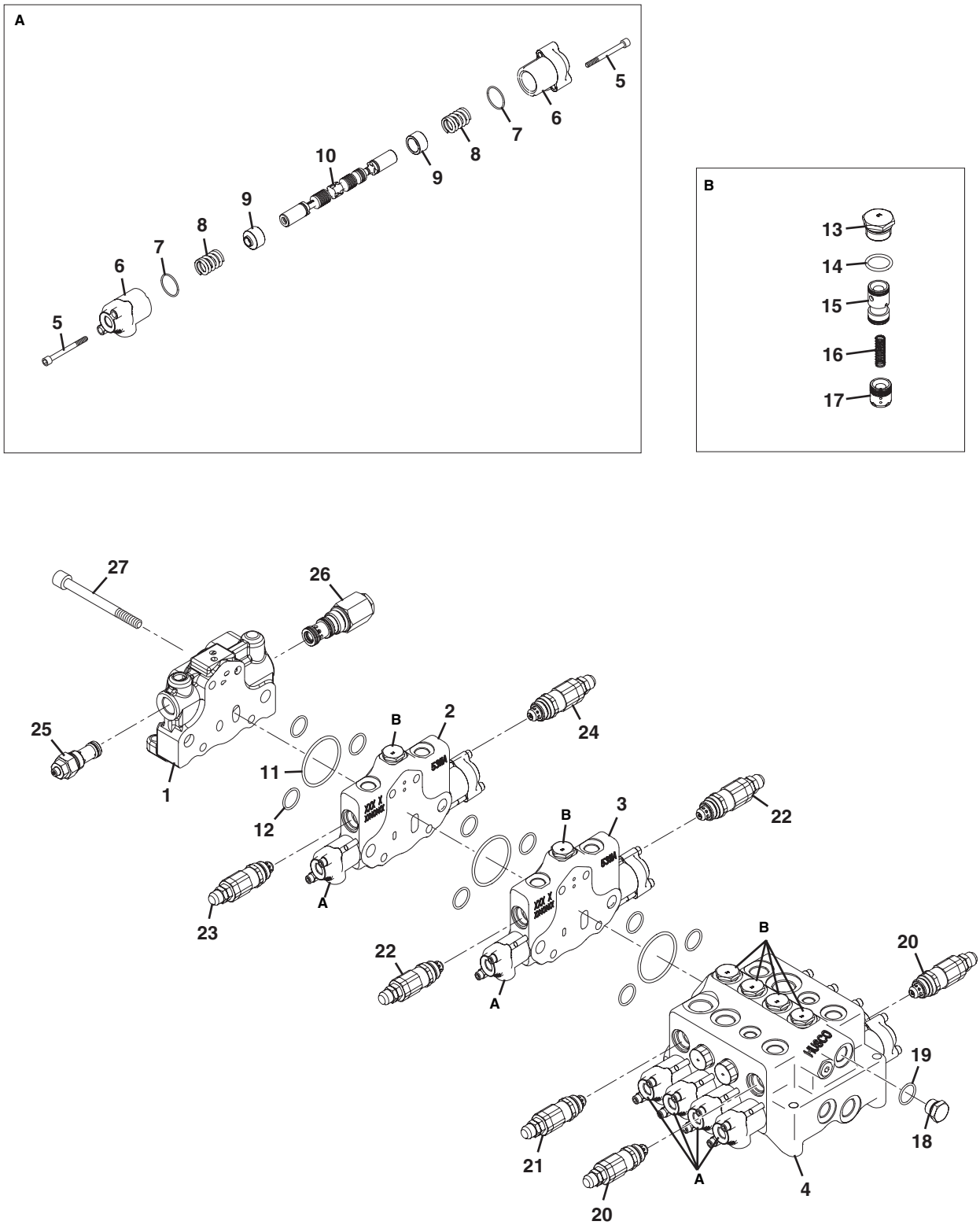

Figure 9-9 Main Control Valve

Item	Part Number	Qty.	Description	Rev.
	8902329	1	MAIN CONTROL VALVE ASSY, (includes all items)	
1	8036787	1	INLET SECTION ASSY, (includes item 26)	
2	8036510	1	TRANSFER CARRIAGE SECTION ASSY, (includes items 5 thru 17)	
3	8036511	1	AUXILIARY SECTION ASSY, (includes items 5 thru 17)	
4		1	LIFT/LOWER, EXTEND/RETRACT, FRAME SWAY & ATTACHMENT TILT MONO BLOCK	
5		2	SOCKET HD CAPSCREW	
6		1	SPOOL CAP	
7	10837924	1	O-RING	
8		1	SPRING	
9		1	SPRING SEAT	
10		1	SPOOL	
11		3	O-RING	
12		9	O-RING	
13	8036512	6	PLUG ASSY, (includes item 14)	
14	8036513	6	O-RING	
15		6	SPOOL-ISOLATOR	
16	8036514	6	SPRING	
17		6	SPOOL-COMPENSATOR	
18	8036516	1	PLUG, (includes item 19)	
19	8036517	1	O-RING	
20	8036523	2	RELIEF CARTRIDGE, 4000 PSI, (275 bar)	
	8035855	1	SEAL KIT	
21	8036519	1	RELIEF CARTRIDGE, 2400 PSI, (165 bar)	
	8036185	1	SEAL KIT	
22	8036520	2	RELIEF CARTRIDGE, 2650 PSI, (182 bar)	
	8036185	1	SEAL KIT	
23	8036521	1	RELIEF CARTRIDGE, 3700 PSI, (255 bar)	
	8036185	1	SEAL KIT	
24	8036518	1	RELIEF CARTRIDGE, 2180 PSI, (150 bar)	
	8036185	1	SEAL KIT	
25	8036507	1	REGULATOR ASSY, 3275 PSI, (226 bar)	
	8036508	1	SEAL KIT	
26	8036505	1	UNLOADER CARTRIDGE ASSY	
	8036506	1	SEAL KIT	
27	8036509	4	SOCKET HD CAPSCREW, (metric)	
	8036515	12	SPOOL CAP KIT, (includes items 5 thru 9)	
	8036503	1	SECTION ASSEMBLIES SEAL KIT, (includes items 11 & 12)	

Figure 9-10 Pilot Select Valve Assembly, (Dual Joystick)

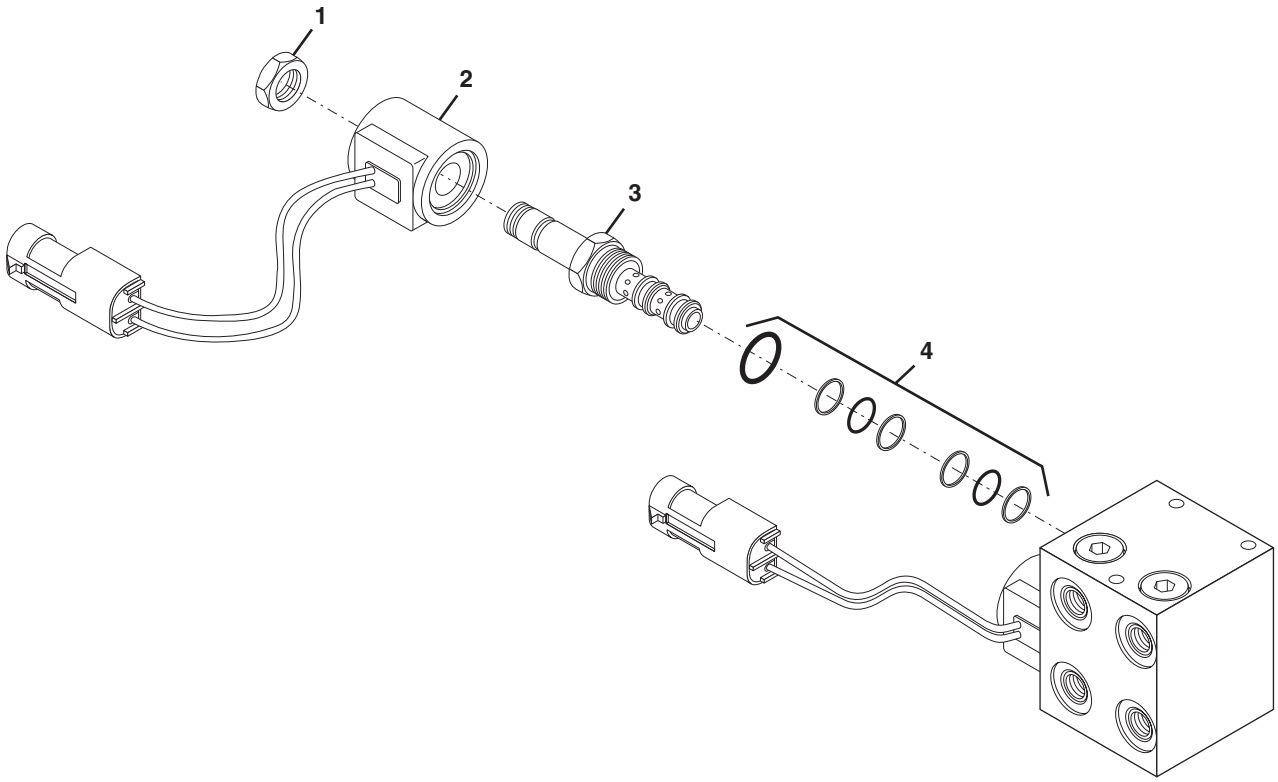

PU2960

Figure 9-10 Pilot Select Valve Assembly, (Dual Joystick)

Item	Part Number	Qty.	Description	Rev.
	10339076	1	PILOT SELECT VALVE -DUAL JOYSTICK, (includes all items)	
1	10740662	2	NUT	
2	10138329	2	COIL	
3	10837352	2	SOLENOID VALVE	
4	10837355	2	SEAL KIT	

Figure 9-11 Pilot Select Valve Assembly, (Single Joystick)

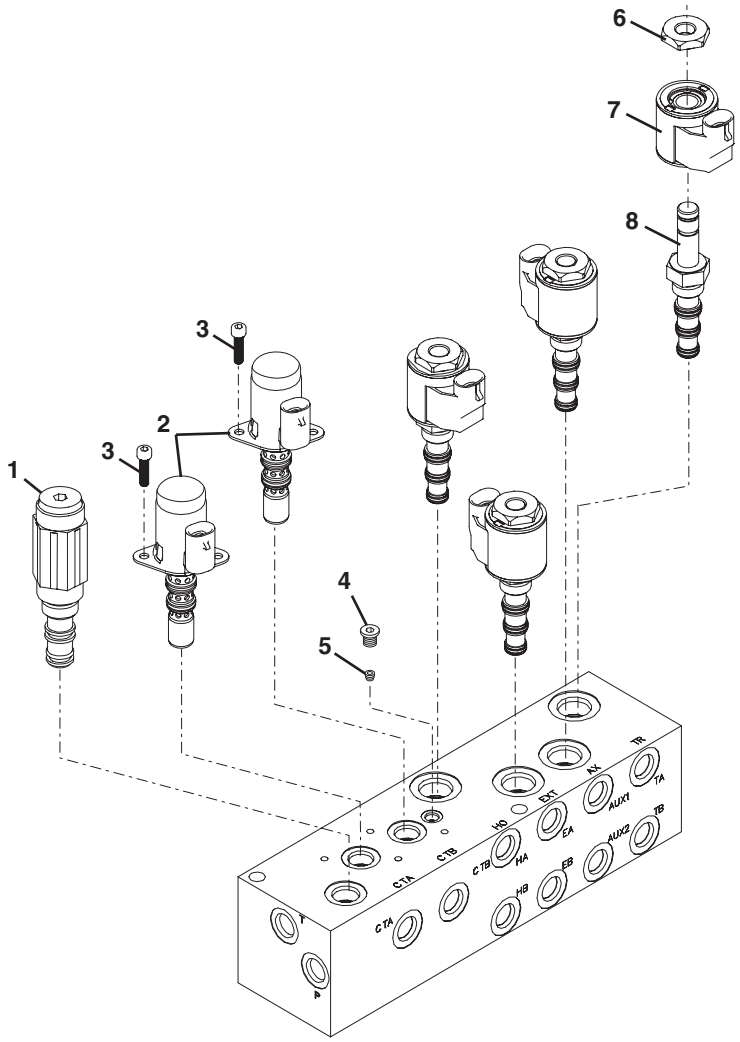

PU2970

Figure 9-11 Pilot Select Valve Assembly, (Single Joystick)

Item	Part Number	Qty.	Description	Rev.
	8902317	1	PILOT SELECT VALVE - SINGLE JOYSTICK, (includes all items)	
1	8036647	1	PRESSURE REDUCING/RELIEVING VALVE, 425 PSI, (29.3 bar)	
	8036648	1	SEAL KIT	
2	8036649	2	PROP PRESSURE REDUCING/RELIEVING VALVE	
	8036650	1	SEAL KIT	
3	8036651	4	SOCKET HD CAPSCREW, M5-0.8X8mm	
4	8036653	1	HOLLOW HEX PLUG, #4	
5	8036652	1	ORIFICE PLUG, 1/16X.020 DIA	
6	8036574	4	SPECIAL NUT	
7	8036573	4	COIL SOLENOID w/INTEGRATED DIODE	
8	1101244	4	SOLENOID VALVE, 2 POSITION 4 WAY	
	8033761	1	SEAL KIT	

Figure 9-12 Accumulator Charge Valve Assembly

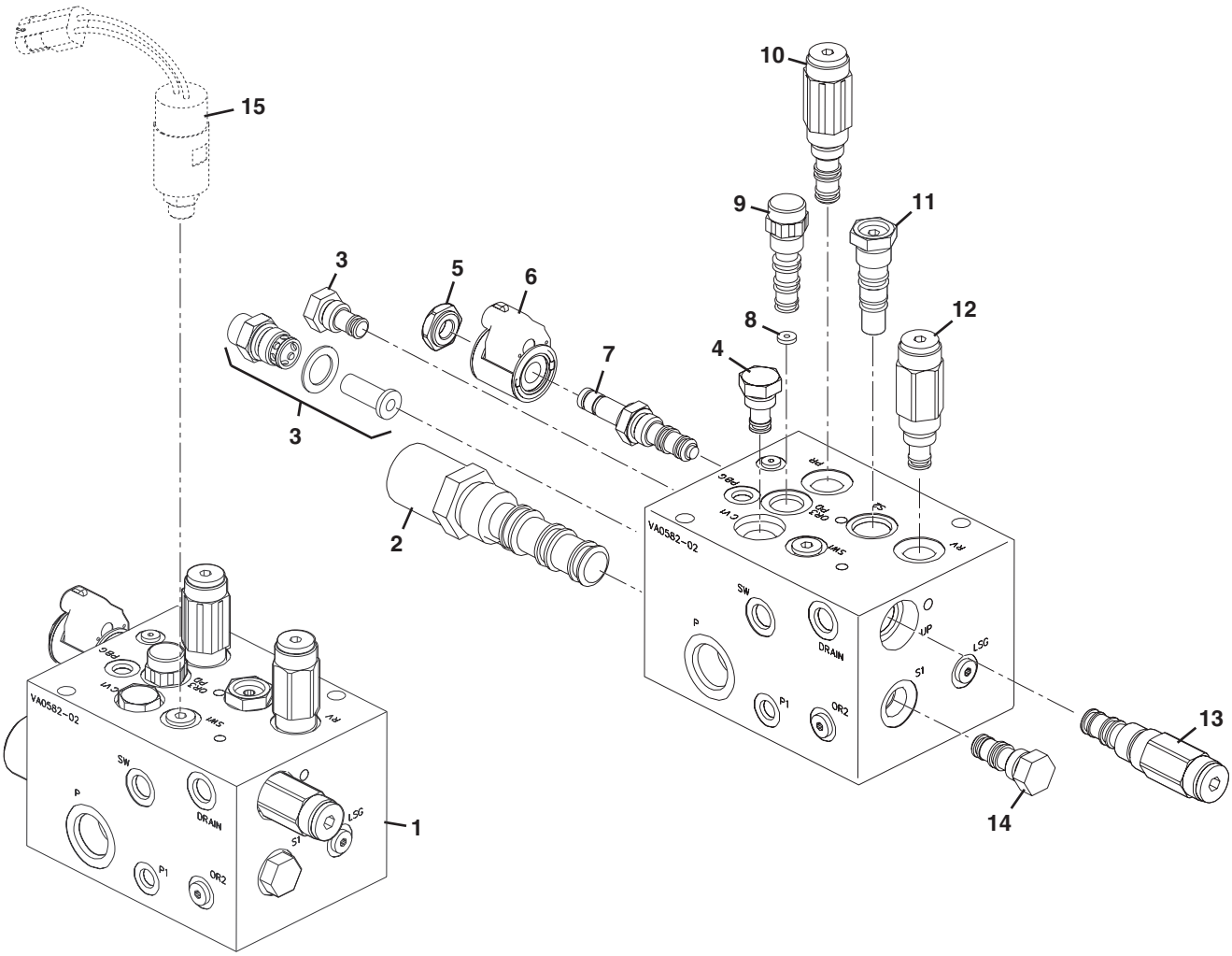

PU2980

Figure 9-12 Accumulator Charge Valve Assembly

Item	Part Number	Qty.	Description	Rev.
1	8902313	1	ACCUMULATOR CHARGE/SECONDARY FUNCTION VALVE	
	1001103491	1	ACCUMULATOR CHARGE/SECONDARY FUNCTION VALVE, **(644-E S/N 0160036724, 0160036811, 0160036907 & 0160037012)**, **(944-E S/N 0160034634, 0160036710, 0160036722, 0160036735 & 0160036738)**	
2	8036460	1	LOAD SENSE COMPENSATOR, 150 PSI, (10 bar), (torque to 75-80 lb-ft)	
	8036493	1	SEAL KIT	
3	8036564	1	FILTER ASSY	
	8036565	1	SEAL KIT	
4	8033769	2	CHECK VALVE CARTRIDGE, 4 PSI, (0.3 bar)	
	10868086	1	SEAL KIT	
	7010543	1	SEAL KIT, **(644-E S/N 0160036724, 0160036811, 0160036907 & 0160037012)**, **(944-E S/N 0160034634, 0160036710, 0160036722, 0160036735 & 0160036738)**	
5	8036574	1	SPECIAL NUT	
6	8036573	1	SOLENOID w/INTERGRATED DIODE COIL, (park brake solenoid)	
7	10837352	1	SOLENOID CARTRIDGE, 2 POSITION, 3 WAY	
	7012941	1	SOLENOID CARTRIDGE, 2 POSITION, 3 WAY, **(644-E S/N 0160036724, 0160036811, 0160036907 & 0160037012)**, **(944-E S/N 0160034634, 0160036710, 0160036722, 0160036735 & 0160036738)**	
	10868086	1	SOLENOID CARTRIDGE SEAL KIT	
	7010543	1	SEAL KIT, **(644-E S/N 0160036724, 0160036811, 0160036907 & 0160037012)**, **(944-E S/N 0160034634, 0160036710, 0160036722, 0160036735 & 0160036738)**	
8	8036457	1	ORIFICE DISC, 0.032	
9	8036456	1	PILOT DIRECTIONAL CARTRIDGE, 2 POSITION, 3 WAY	
	10868902	1	SEAL KIT	
	7017402	1	SEAL KIT, **(644-E S/N 0160036724, 0160036811, 0160036907 & 0160037012)**, **(944-E S/N 0160034634, 0160036710, 0160036722, 0160036735 & 0160036738)**	
10	8036571	1	PRESSURE REDUCING CARTRIDGE, 550 PSI, (37 bar)	
	8036572	1	SEAL KIT	
11	8036568	1	INVERTED SHUTTLE CARTRIDGE	
	8036569	1	INVERTED SHUTTLE SEAL KIT	
12	8036570	1	DIRECT ACTING RELIEF CARTRIDGE, 2450 PSI, (168 bar)	
		1	DIRECT ACTING RELIEF CARTRIDGE, 2700 PSI, (186 bar), **(644-E S/N 0160036724, 0160036811, 0160036907 & 0160037012)**, **(944-E S/N 0160034634, 0160036710, 0160036722, 0160036735 & 0160036738)**	
	10868086	1	SEAL KIT	
	7010543	1	SEAL KIT, **(644-E S/N 0160036724, 0160036811, 0160036907 & 0160037012)**, **(944-E S/N 0160034634, 0160036710, 0160036722, 0160036735 & 0160036738)**	
13	8036566	1	CHARGE LOGIC CARTRIDGE, 1050-1950 PSI, (72-134 bar)	
		1	CHARGE LOGIC CARTRIDGE, 1245-2300 PSI, (86-158 bar)	
	8036567	1	SEAL KIT	
	2900707	1	SEAL KIT, **(644-E S/N 0160036724, 0160036811, 0160036907 & 0160037012)**, **(944-E S/N 0160034634, 0160036710, 0160036722, 0160036735 & 0160036738)**	
14	10837580	1	LOAD SHUTTLE CARTRIDGE	
	7010542	1	LOAD SHUTTLE CARTRIDGE, **(644-E S/N 0160036724, 0160036811, 0160036907 & 0160037012)**, **(944-E S/N 0160034634, 0160036710, 0160036722, 0160036735 & 0160036738)**	

Figure 9-12 Accumulator Charge Valve Assembly (Continued)

Item	Part Number	Qty.	Description	Rev.
	8036572	1	SEAL KIT	
	7010543	1	SEAL KIT, **(644-E S/N 0160036724, 0160036811, 0160036907 & 0160037012)**, **(944-E S/N 0160034634, 0160036710, 0160036722, 0160036735 & 0160036738)**	
15		Ref	BRAKE PRESSURE SWITCH, (see Figure 10-3 for details)	

Figure 9-12 Accumulator Charge Valve Assembly (Continued)

Item	Part Number	Qty.	Description	Rev.

Figure 9-13 Stabil-Trak Cylinder Valves

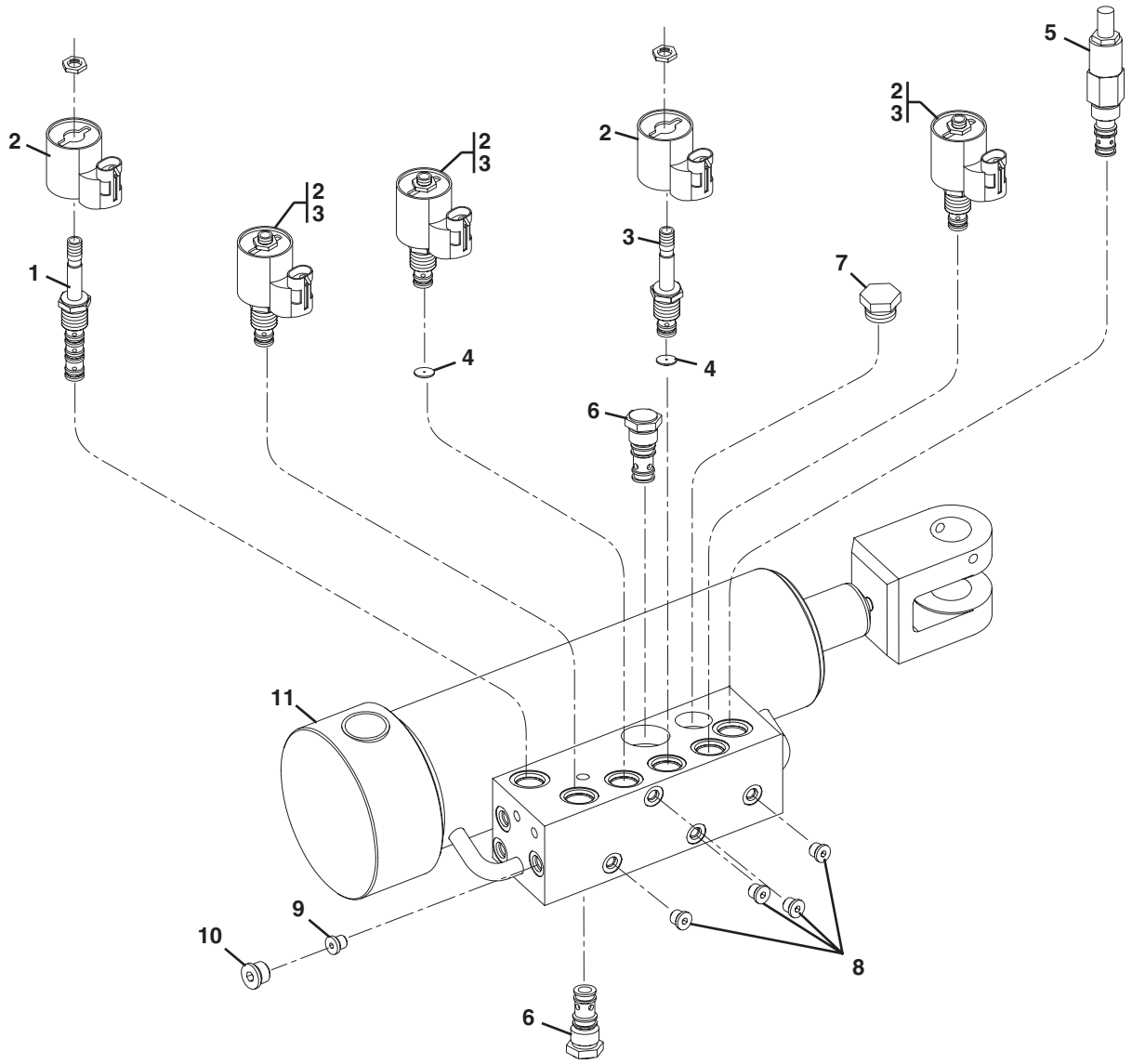

Figure 9-13 Stabil-Trak Cylinder Valves

Item	Part Number	Qty.	Description	Rev.
	8036831	1	SOLENOID VALVE ASSY - 4 WAY, 12V, (includes items 1 & 2)	
	8036740	1	SEAL KIT	
	8036832	4	SOLENOID VALVE ASSY - 2 WAY, 12V, (includes items 2 & 3)	
	7017496	1	SEAL KIT	
1	8036580	1	SOLENOID VALVE CARTRIDGE, (includes nut)	
2	8036579	5	SOLENOID COIL	
3	8036581	4	SOLENOID VALVE CARTRIDGE, (includes nut)	
4	8035781	2	CONICAL ORIFICE DISK, .060 DIA	
5	8036162	1	PRESSURE REDUCING VALVE, 100 PSI, (7 bar)	
	8032994	1	SEAL KIT	
6	8035757	2	PO CHECK VALVE - SERIES 10	
	8036739	1	SEAL KIT	
7	8036582	1	CHECK RELIEF VALVE, 200 PSI, (13 bar)	
	7017496	1	SEAL KIT	
8	8035785	4	HOLLOW HEX PLUG, #4	
9	8035782	1	ORIFICE PLUG, .030 DIA	
10	8035784	1	HOLLOW HEX PLUG, #6	
11		Ref	STABIL-TRAK CYLINDER, (see Figure 9-5 for details)	

Figure 9-14 Auxiliary Dump Valve Assemblies

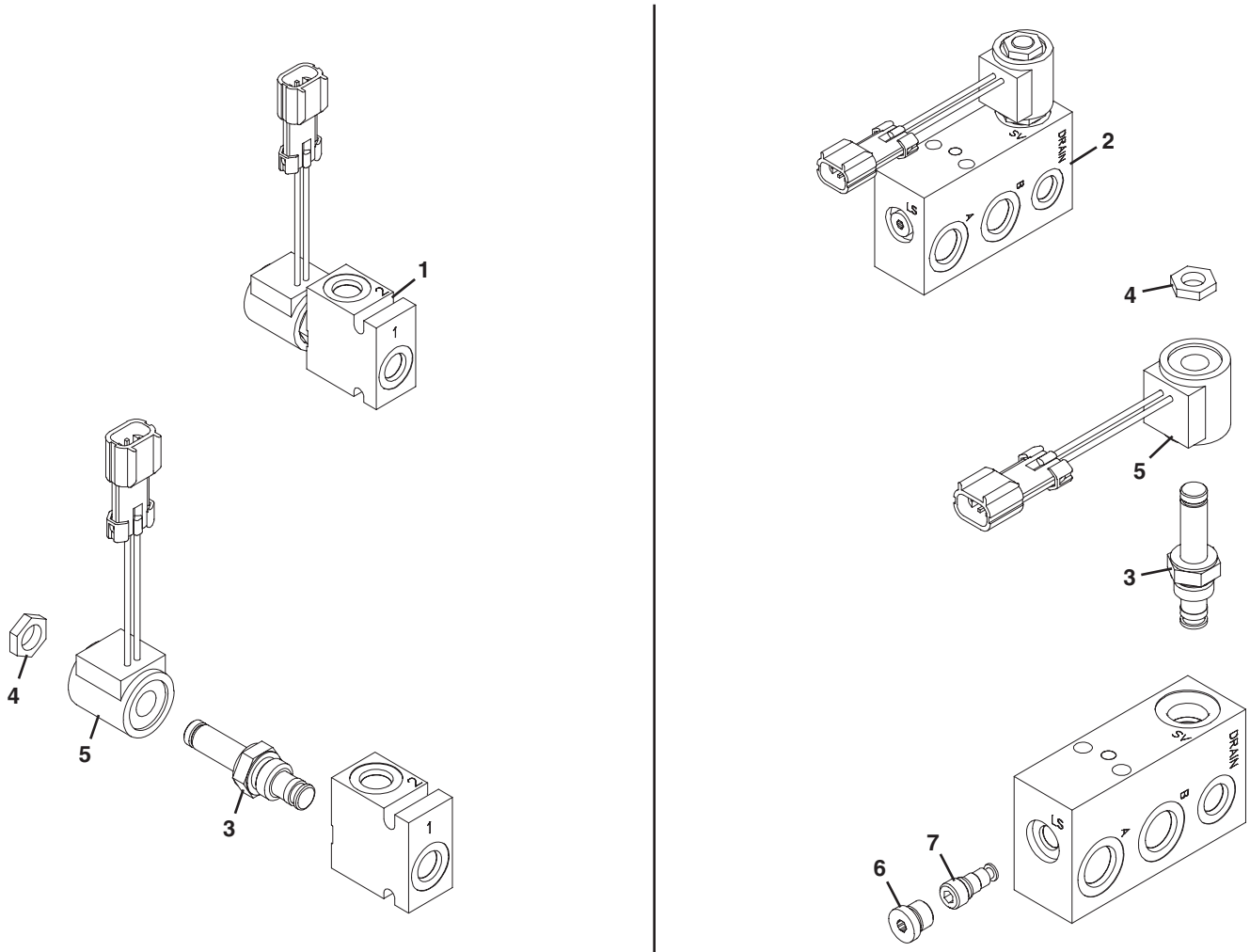

PU3000

Figure 9-14 Auxiliary Dump Valve Assemblies

Item	Part Number	Qty.	Description	Rev.
1	8902321	1	SOLENOID AUX PRESSURE DUMP VALVE, (includes items 3 thru 5), **(644E & 944E S/N 17569 thru 19041)**	
2	8902322	1	SOLENOID AUX PRESSURE DUMP VALVE, (includes items 3 thru 7), **(644E S/N 19042 thru 20123 & 016002514 thru 0160003074), (944E S/N 19042 thru 20123 & 016002514 thru 0160003072)**	
3	10867167	1	SOLENOID CARTRIDGE, 2 WAY, (includes item 4)	
	8036526	1	SEAL KIT	
4		1	SPECIAL NUT	
5	8036525	1	SOLENOID w/DIODE COIL	
6	8036527	1	HOLLOW HEX O-RING PLUG	
7	10837247	1	SHUTTLE VALVE	

Figure 9-15 Valve Tray Assembly, (Dual Joystick)

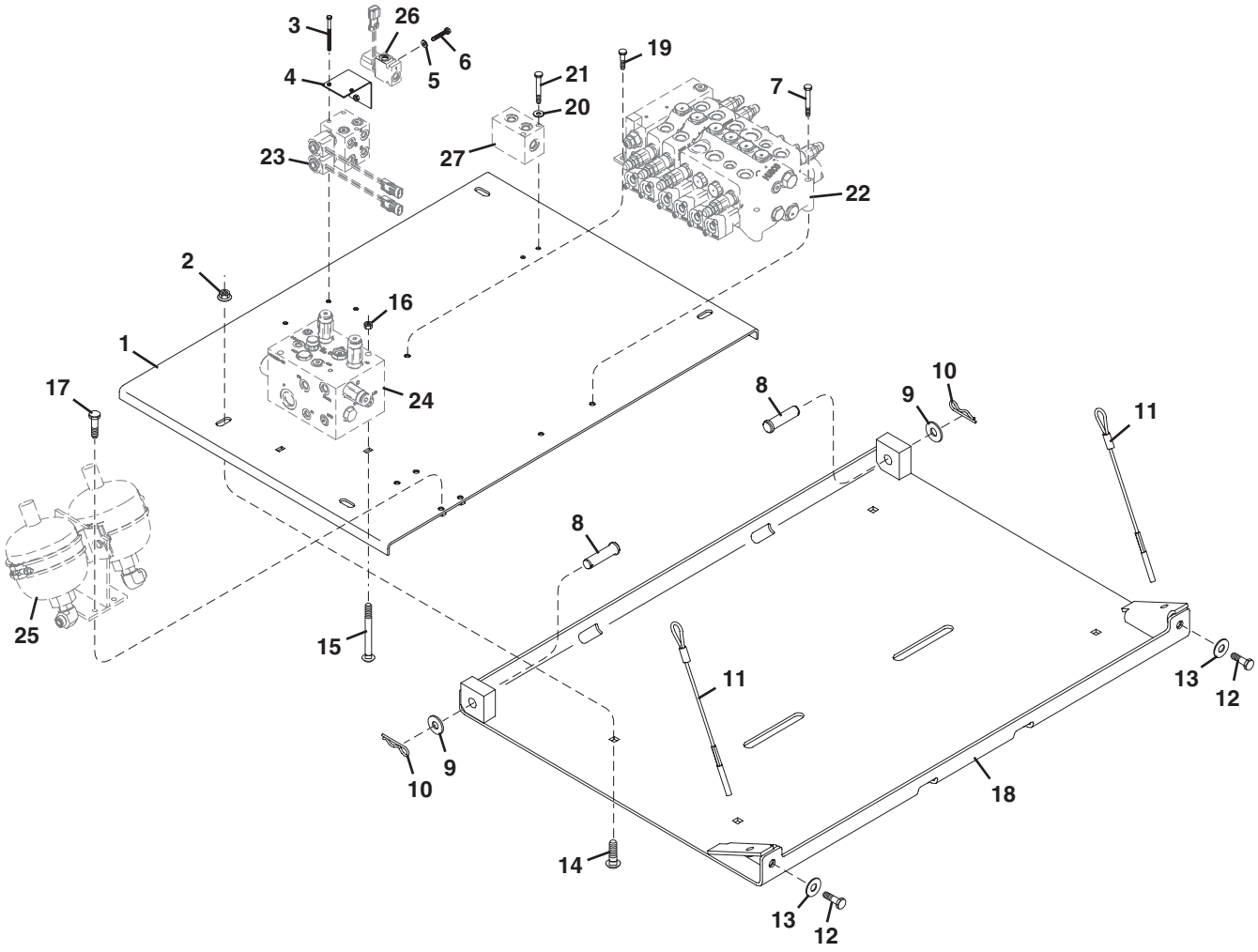

Figure 9-15 Valve Tray Assembly, (Dual Joystick)

Item	Part Number	Qty.	Description	Rev.
1	7300490	1	VALVE MOUNTING PLATE	
2	8310194	4	FLANGE NUT, M12-1.75	
3	8310638	2	HEX HD CAPSCREW, M6X1X90mm, PC8.8	
4	7301605	1	AUX DUMP VALVE MOUNTING BRACKET	
5	8307219	2	FLAT WASHER, M6	
6	8303541	2	HEX HD CAPSCREW, M6-1.0X35mm, PC8.8	
7	8310030	2	HEX HD CAPSCREW, M8-1.25X80mm, PC8.8	
8	8301453	2	CLEVIS PIN, 3/4	
9	8307104	2	FLAT WASHER, 3/4	
10	8310211	2	COTTER HAIR PIN	
11	7130412	2	TETHER	
12	8303519	2	HEX HD CAPSCREW, M12-1.75X35mm, PC8.8	
13	8310308	2	FLAT HARDENED WASHER, 1/2	
14	8310604	4	CARRIAGE BOLT, M12-1.75X50mm, PC8.8	
15	8310711	2	CARRIAGE BOLT, M8-1.25X140mm, PC8.8	
16	8305043	2	HEX NUT, M8-1.25	
17	8303783	4	HEX HD CAPSCREW, M8-1.25X25mm, PC8.8	
18	7300218	1	VALVE TRAY MOUNTING PLATE	
19	8303606	1	HEX HD CAPSCREW, M8-1.25X20mm, PC8.8	
20	8307219	2	FLAT WASHER, M6	
21	8310714	2	HEX HD CAPSCREW, M6-1X80mm, PC8.8	
22		Ref	MAIN CONTROL VALVE, (see Figure 9-9 for details)	
23		Ref	PILOT SELECT VALVE, (see Figure 9-10 for details)	
24		Ref	ACCUMULATOR CHARGE VALVE, (see Figure 9-12 for details)	
25		Ref	ACCUMULATORS, (see Figure 9-18 for details)	
26		Ref	AUXILIARY DUMP VALVE, (see Figure 9-14 for details)	
27		Ref	MANIFOLD, (see Figure 8-2 for details)	

Figure 9-15 Valve Tray Assembly, (Dual Joystick)

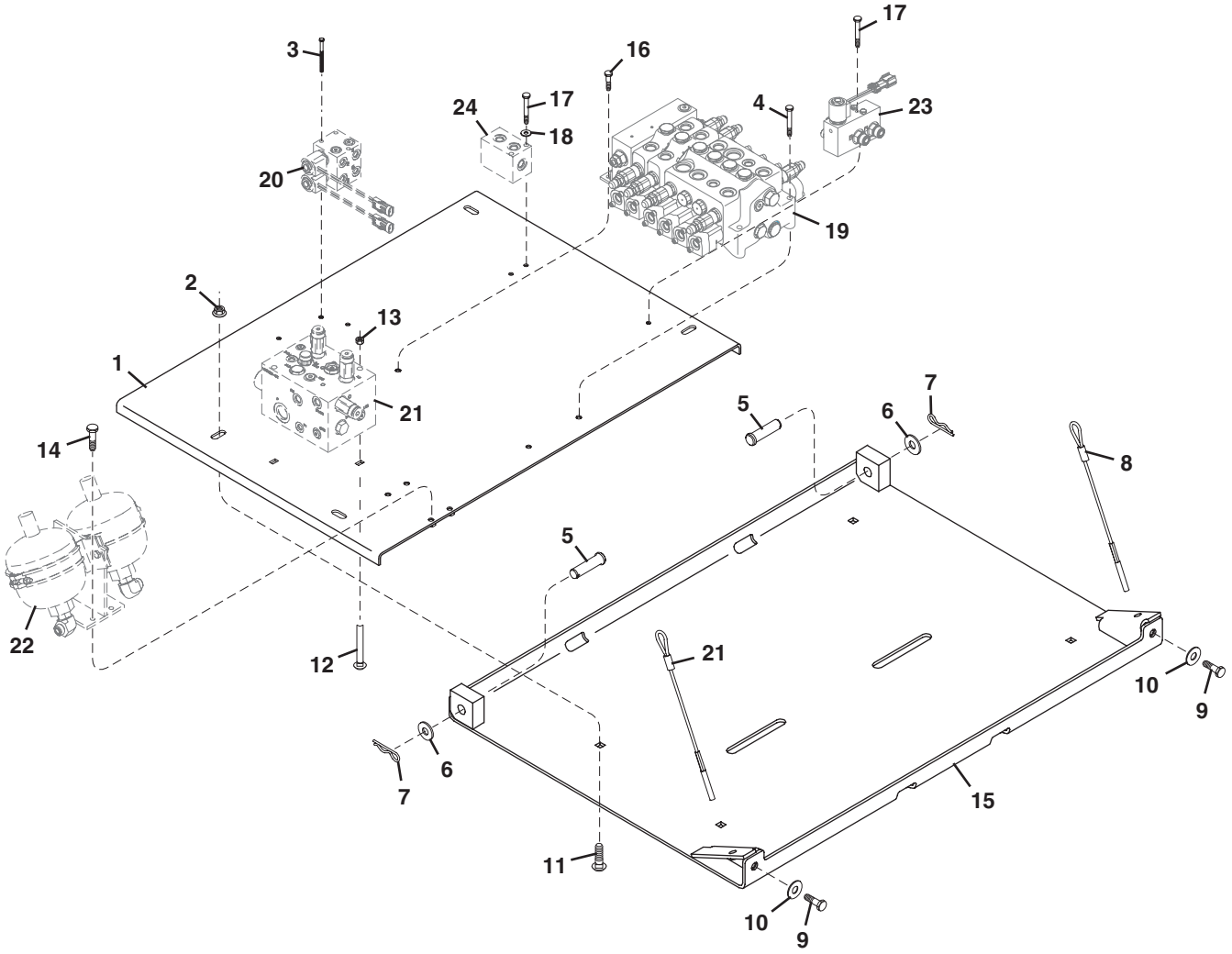

Figure 9-15 Valve Tray Assembly, (Dual Joystick)

Item	Part Number	Qty.	Description	Rev.
1	7300490	1	VALVE MOUNTING PLATE	
2	8310194	4	FLANGE NUT, M12X1.75	
3	8310638	2	HEX HD CAPSCREW, M6X1X90mm, PC8.8	
4	8310030	2	HEX HD CAPSCREW, M8-1.25X80mm, PC8.8	
5	8301453	2	CLEVIS PIN, 3/4	
6	8307104	2	FLAT WASHER, 3/4	
7	8310211	2	COTTER HAIR PIN	
8	7130412	2	TETHER	
9	8303519	2	HEX HD CAPSCREW, M12-1.75X35mm, PC8.8	
10	8310308	2	FLAT HARDENED WASHER, 1/2	
11	8310604	4	CARRIAGE BOLT, M12-1.75X50mm, PC8.8	
12	8310711	2	CARRIAGE BOLT, M8-1.25X140mm, PC8.8	
13	8305043	2	HEX NUT, M8-1.25	
14	8303783	4	HEX HD CAPSCREW, M8-1.25X25mm, PC8.8	
15	7300218	1	VALVE TRAY MOUNTING PLATE	
16	8303606	1	HEX HD CAPSCREW, M8-1.25X20mm, PC8.8	
17	8310714	4	HEX HD CAPSCREW, M6-1.0X80mm, PC8.8	
18	8307219	2	FLAT WASHER, M6	
19		Ref	MAIN CONTROL VALVE, (see Figure 9-9 for details)	
20		Ref	PILOT SELECT VALVE, (see Figure 9-10 for details)	
21		Ref	ACCUMULATOR CHARGE VALVE, (see Figure 9-12 for details)	
22		Ref	ACCUMULATORS, (see Figure 9-18 for details)	
23		Ref	AUXILIARY DUMP VALVE, (see Figure 9-14 for details)	
24		Ref	MANIFOLD, (see Figure 8-2 for details)	

Figure 9-15 Valve Tray Assembly, (Dual Joystick)

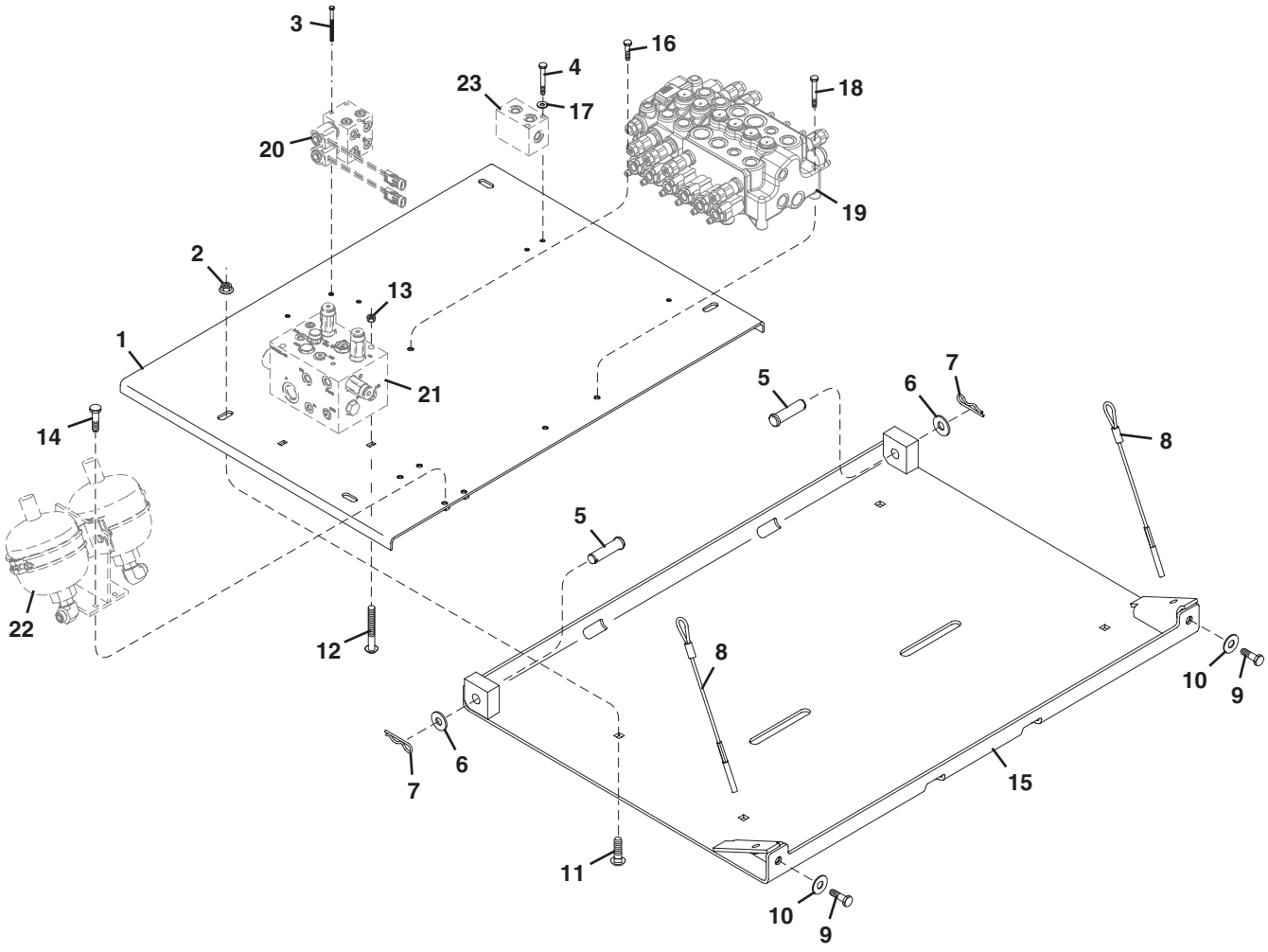

Figure 9-15 Valve Tray Assembly, (Dual Joystick)

Item	Part Number	Qty.	Description	Rev.
1	7300490	1	VALVE MOUNTING PLATE	
2	8310194	4	FLANGE NUT, M12X1.75	
3	8310638	2	HEX HD CAPSCREW, M6X1X90mm, PC8.8	
4	8310714	2	HEX HD CAPSCREW, M6X1X80mm, PC8.8	
5	8301453	2	CLEVIS PIN, 3/4	
6	8307104	2	FLAT WASHER, 3/4	
7	8310211	2	COTTER HAIR PIN	
8	7130412	2	TETHER	
9	8303519	2	HEX HD CAPSCREW, M12-1.75X35mm, PC8.8	
10	8310308	2	FLAT HARDENED WASHER, 1/2	
11	8310604	4	CARRIAGE BOLT, M12-1.75X50mm, PC8.8	
12	8310711	2	CARRIAGE BOLT, M8-1.25X140mm, PC8.8	
13	8305043	2	HEX NUT, M8-1.25	
14	8303783	4	HEX HD CAPSCREW, M8-1.25X25mm, PC8.8	
15	7300218	1	VALVE TRAY MOUNTING PLATE	
16	8303611	1	HEX HD CAPSCREW, M8-1.25X30mm, PC8.8	
17	8307219	4	FLAT WASHER, M6	
18	8310030	2	HEX HD CAPSCREW, M8-1.25X80mm, PC8.8	
19		Ref	MAIN CONTROL VALVE, (see Figure 9-9 for details)	
20		Ref	PILOT SELECT VALVE, (see Figure 9-10 for details)	
21		Ref	ACCUMULATOR CHARGE VALVE, (see Figure 9-12 for details)	
22		Ref	ACCUMULATORS, (see Figure 9-18 for details)	
23		Ref	MANIFOLD, (see Figure 8-2 for details)	

Figure 9-16 Valve Tray Assembly, (Single Joystick)

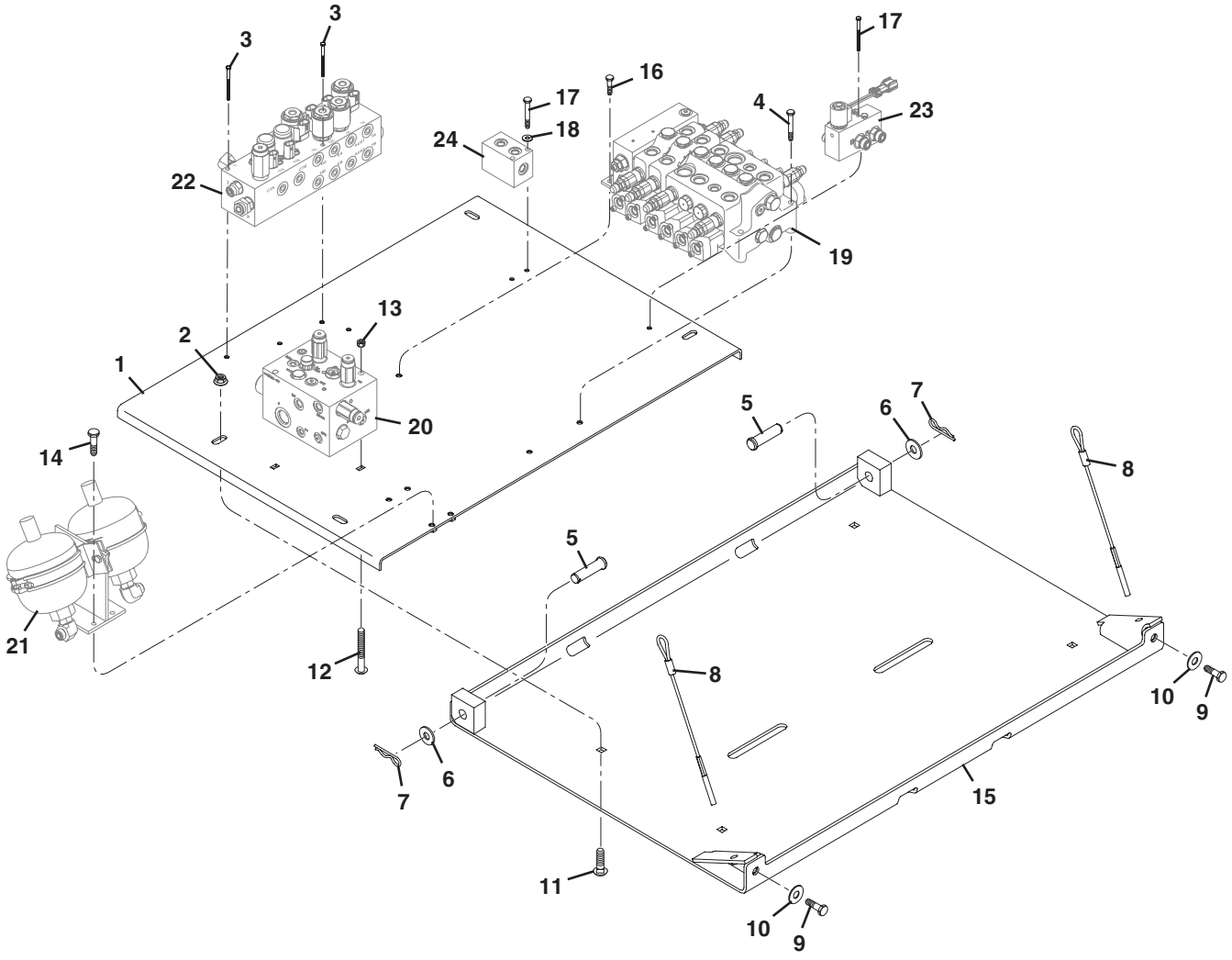

Figure 9-16 Valve Tray Assembly, (Single Joystick)

Item	Part Number	Qty.	Description	Rev.
1	7300490	1	VALVE MOUNTING PLATE	
2	8310194	4	FLANGE NUT, M12X1.75	
3	8310638	2	HEX HD CAPSCREW, M6-1.0X90mm, PC8.8	
4	8310030	4	HEX HD CAPSCREW, M8-1.25X80mm, PC8.8	
5	8301453	2	CLEVIS PIN, 3/4	
6	8307104	2	FLAT WASHER, 3/4	
7	8310211	2	COTTER HAIR PIN	
8	7130412	2	TETHER	
9	8303519	2	HEX HD CAPSCREW, M12-1.75X35mm, PC8.8	
10	8310308	2	FLAT HARDENED WASHER, 1/2	
11	8310604	4	CARRIAGE BOLT, M12-1.75X50mm, PC8.8	
12	8310711	2	CARRIAGE BOLT, M8-1.25X140mm, PC8.8	
13	8305043	2	HEX NUT, M8-13.25	
14	8303783	4	HEX HD CAPSCREW, M8-1.25X25mm, PC8.8	
15	7300218	1	VALVE TRAY MOUNTING PLATE	
16	8303606	1	HEX HD CAPSCREW, M8-1.25X20mm, PC8.8	
17	8310714	2	HEX HD CAPSCREW, M6-1.0X80mm, PC8.8	
18	8307219	2	FLAT WASHER, M6	
19		Ref	MAIN CONTROL VALVE, (see Figure 9-9 for details)	
20		Ref	ACCUMULATOR CHARGE VALVE, (see Figure 9-12 for details)	
21		Ref	ACCUMULATORS, (see Figure 9-18 for details)	
22		Ref	PILOT SELECT VALVE, (see Figure 9-10 for details)	
23		Ref	AUXILIARY DUMP VALVE, (see Figure 9-14 for details)	
24		Ref	MANIFOLD, (see Figure 8-2 for details)	

Figure 9-16 Valve Tray Assembly, (Single Joystick)

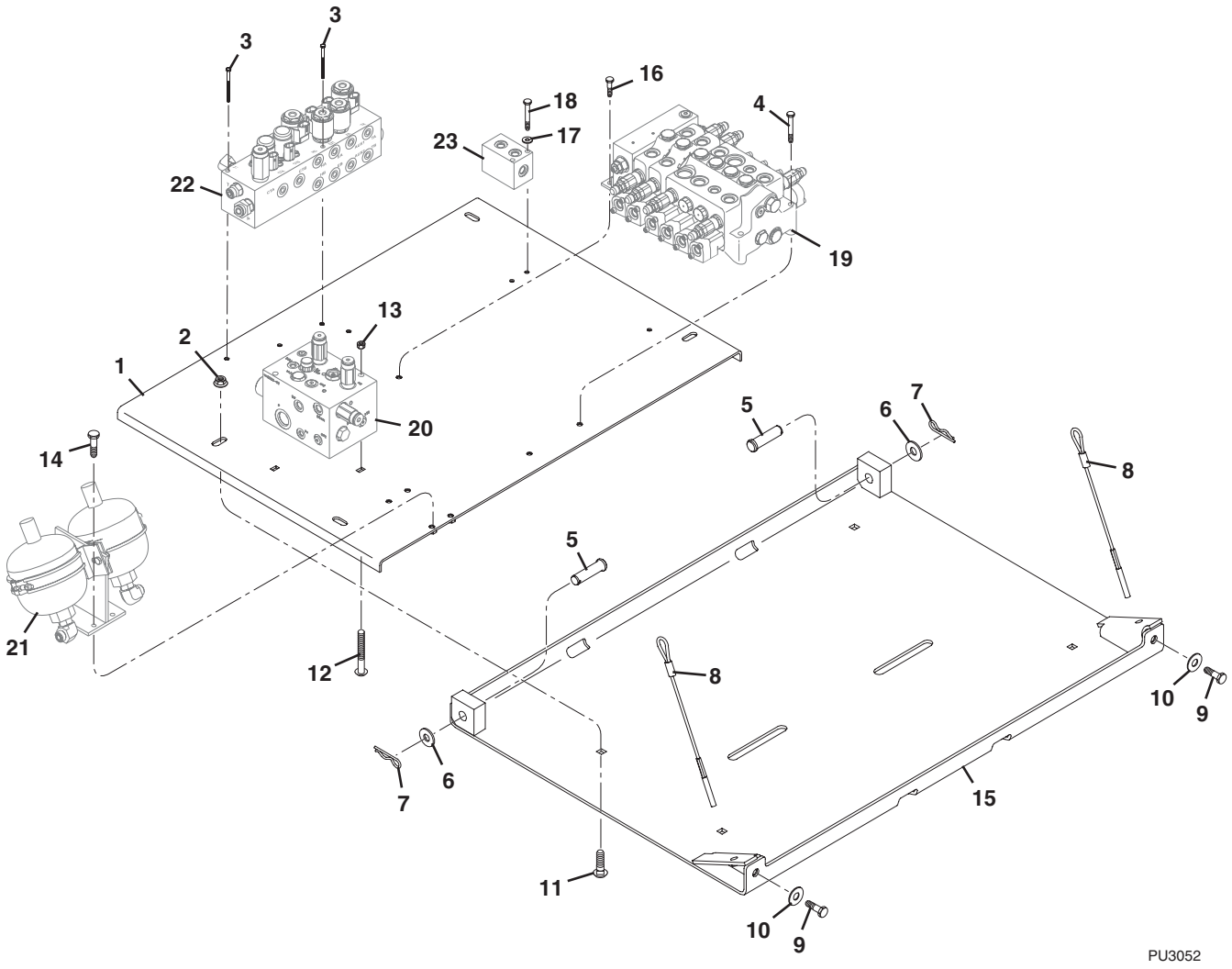

Figure 9-16 Valve Tray Assembly, (Single Joystick)

Item	Part Number	Qty.	Description	Rev.
1	7300490	1	VALVE MOUNTING PLATE	
2	8310194	4	FLANGE NUT, M12X1.75	
3	8310638	2	HEX HD CAPSCREW M6-1.0X90mm, PC8.8	
4	8310030	4	HEX HD CAPSCREW, M8-1.25X80mm, PC8.8	
5	8301453	2	CLEVIS PIN, 3/4	
6	8307104	2	FLAT WASHER, 3/4	
7	8310211	2	COTTER HAIR PIN	
8	7130412	2	TETHER	
9	8303519	2	HEX HD CAPSCREW, M12-1.75X35mm, PC8.8	
10	8310308	2	FLAT HARDENED WASHER, 1/2	
11	8310604	4	CARRIAGE BOLT, M12-1.75X50mm, PC8.8	
12	8310711	2	CARRIAGE BOLT, M8-1.25X140mm, PC8.8	
13	8305043	2	HEX NUT, M8-1.25	
14	8303783	4	HEX HD CAPSCREW, M8-1.25X25mm, PC8.8	
15	7301093	1	VALVE TRAY MOUNTING PLATE	
16	8303606	1	HEX HD CAPSCREW, M8-1.25X20mm, PC8.8	
17	8307219	2	FLAT WASHER, M6	
18	8310714	2	HEX HD CAPSCREW, M6-1.0X80mm, PC8.8	
19		Ref	MAIN CONTROL VALVE, (see Figure 9-9 for details)	
20		Ref	ACCUMULATOR CHARGE VALVE, (see Figure 9-12 for details)	
21		Ref	ACCUMULATORS, (see Figure 9-18 for details)	
22		Ref	PILOT SELECT VALVE, (see Figure 9-10 for details)	
23		Ref	MANIFOLD, (see Figure 8-2 for details)	

Figure 9-17 Hydraulic Reservoir Assembly

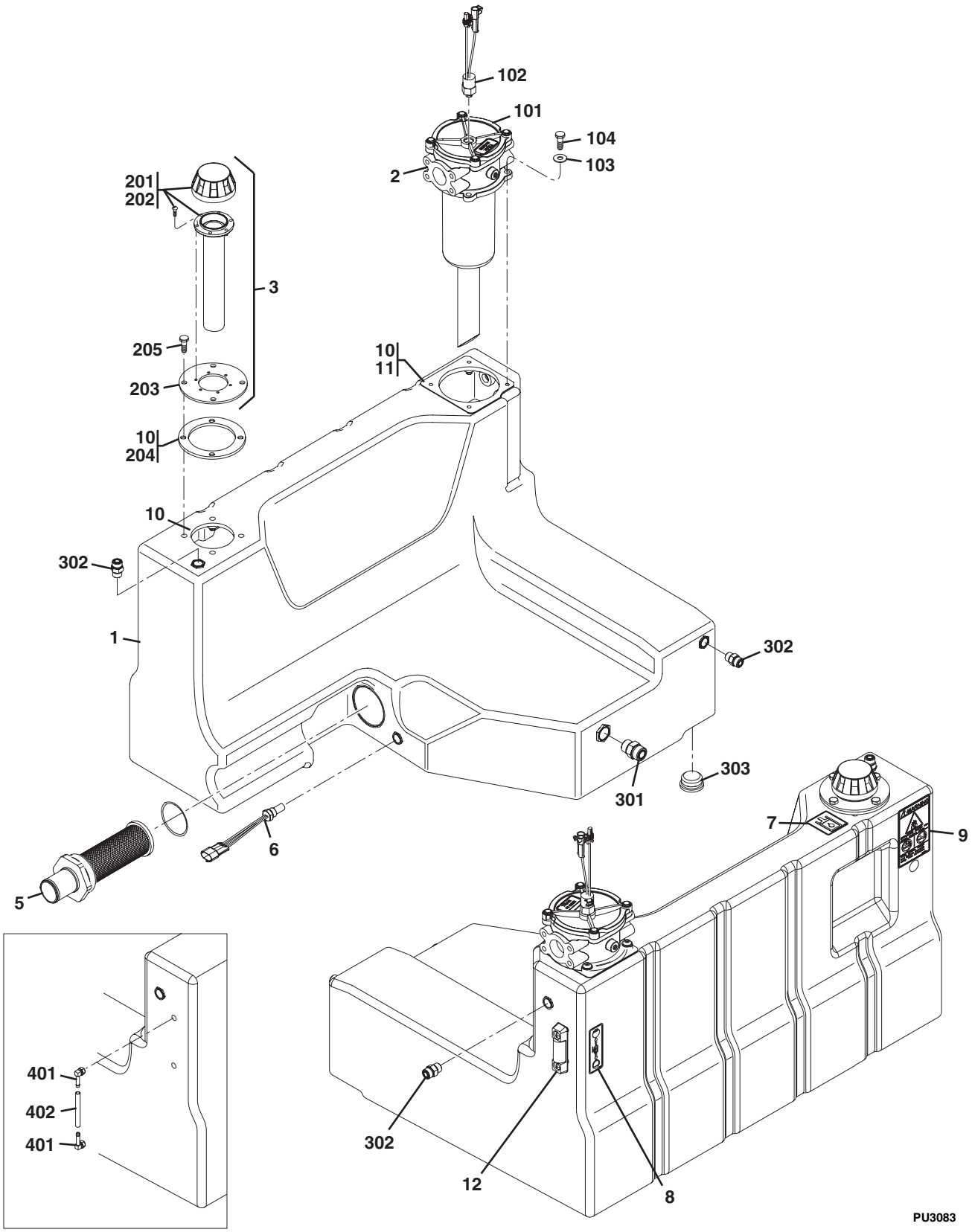

Figure 9-17 Hydraulic Reservoir Assembly

Item	Part Number	Qty.	Description	Rev.
	7300226	1	RESERVOIR ASSY, (includes items 1 thru 11)	G
1		1	HYDRAULIC TANK ASSY, (order Service Kit, 1001092281), **(644E S/N 17569 thru 20123 & 0160002514 thru 0160029565), (944E S/N 17569 thru 20123 & 0160002514 thru 0160029564)**	
	1001091304	1	HYDRAULIC TANK ASSY, **(644E S/N 0160029567 & After), (944E S/N 0160029566 & After)**	
2	7300537	1	RETURN FILTER ASSY, (includes items 101 thru 104)	
3	7300538	1	FILLER CAP w/STRAINER ASSY, (includes items 201 thru 205)	
4	7300539	1	HYDRAULIC RESERVOIR FITTING KIT, (includes items 301 thru 303)	
5	7138740	1	SUCTION STRAINER, (torque to 65-85 lb-ft)(	
	7029716	1	O-RING	
6	8223240	1	DUAL TEMPERATURE SWITCH, (torque to 25-40 lb-ft)(	
7	4100181	1	HYDRAULIC OIL FILL DECAL, **(644E S/N 17569 thru 20123 & 0160002514 thru 0160025030), (944E S/N 17569 thru 20123 & 0160002514 thru 0160025029)**	
	1707079	1	HYDRAULIC OIL FILL DECAL, **(644E S/N 0160025031 & After), (944E S/N 0160025032 & After)**	
8	4108302	1	HYDRAULIC OIL LEVEL DECAL, **(644E S/N 17569 thru 20123 & 0160002514 thru 0160025030), (944E S/N 17569 thru 20123 & 0160002514 thru 0160025029)**	
	1707114	1	HYDRAULIC OIL LEVEL DECAL, **(644E S/N 0160025031 & After), (944E S/N 0160025032 & After)**	
9	1707077	1	BATTERY EXPLOSION, WARNING DECAL	
10	8320055	1	GASKET	
11	0100087	A/R	GASKET SEALANT ADHESIVE	
12	91563136	1	FLUID LEVEL GAUGE, **(644E S/N 0160015631 & After), (944E S/N 0160015628 & After)**	
101	8320053	1	HEAD & ELEMENT FILTER ASSY	
	8320054	1	HYDRAULIC OIL FILTER, (not shown)	
	7028932	1	SEAL KIT	
	8320055	1	GASKET	
102	8223526	1	HYDRAULIC OIL FILTER PRESSURE SWITCH, (torque to 25-40 lb-ft)	
103	8307221	4	PLAIN WASHER, M10	
104	8310668	4	BUTTON HD CAPSCREW, M10-1.2X25MM, PC10.9, (torque to 40-50 lb-in)	
201	7300487	1	FILL NECK ASSY, (includes 202 & 203)	
202	7300479	1	FILLER CAP, NO BREATHER ASSY	
203	0080268	1	FILL NECK ADAPTER	
204	7138209	1	HYDRAULIC TANK GASKET	
205	8303798	4	HEX HD CAPSCREW, M10X1.5X25MM, PC8.8, (torque to 40-50 lb-in)	
301		Ref	CONNECTOR, (see Figure 8-1 for details)	
302		Ref	CONNECTOR, (see Figure 8-1 for details)	
303	8770223	1	SOCKET PLUG, HD #16, (torque to 25-40 lb-ft)	
401	8430034	2	ELBOW, 90 DEGREES, O-RING BEADED #6-6, **(644E S/N 17569 thru 20123 & 0160002514 thru 0160015606), (944E S/N 17569 thru 20123 & 0160002514 thru 0160015601)**	
402	8036627	1	SIGHT GAUGE TUBING, **(644E S/N 17569 thru 20123 & 0160002514 thru 0160015606), (944E S/N 17569 thru 20123 & 0160002514 thru 0160015601)**	
	1001092281		HYDRAULIC TANK ASSEMBLY KIT, (includes items 1 & 12)	
			NOTE: ITEM NUMBERS NOT LISTED ARE NOT USED ON THIS FIGURE	

Figure 9-18 Accumulators Assembly

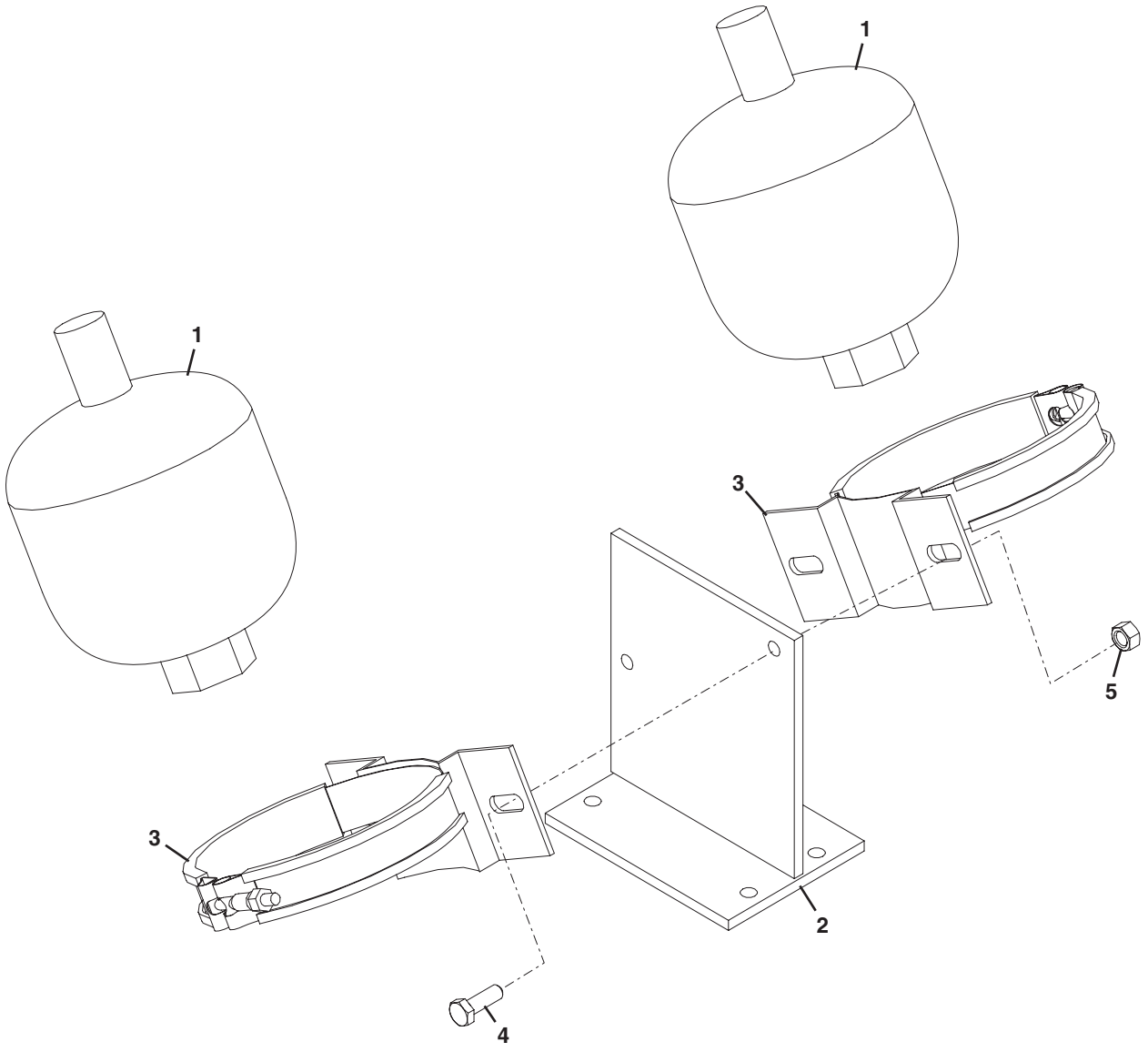

PU3120

Figure 9-18 Accumulators Assembly

Item	Part Number	Qty.	Description	Rev.
1	8742009	2	HYDRAULIC ACCUMULATOR, 1 LITER DIAPHRAGM, **(644-E excluding S/N 0160036724, 0160036811, 0160036907 & 0160037012)**, **(944-E excluding S/N 0160034634, 0160036710, 0160036722, 0160036735 & 0160036738)**	
	1001103492	2	HYDRAULIC ACCUMULATOR, 1 LITER DIAPHRAGM, **(644-E S/N 0160036724, 0160036811, 0160036907 & 0160037012)**, **(944-E S/N 0160034634, 0160036710, 0160036722, 0160036735 & 0160036738)**	
2	7300987	1	ACCUMULATOR MOUNTING BRACKET	
3	7301013	2	ACCUMULATOR MOUNT CLAMP	
4	8303783	2	HEX HD CAPSCREW, M8-1.25X25mm, PC8.8	
5	8305043	2	HEX NUT, M8-1.25	
	10268992	1	ACCUMULATOR CHARGE KIT	

Figure 9-19 Diagnostic Pressure Taps

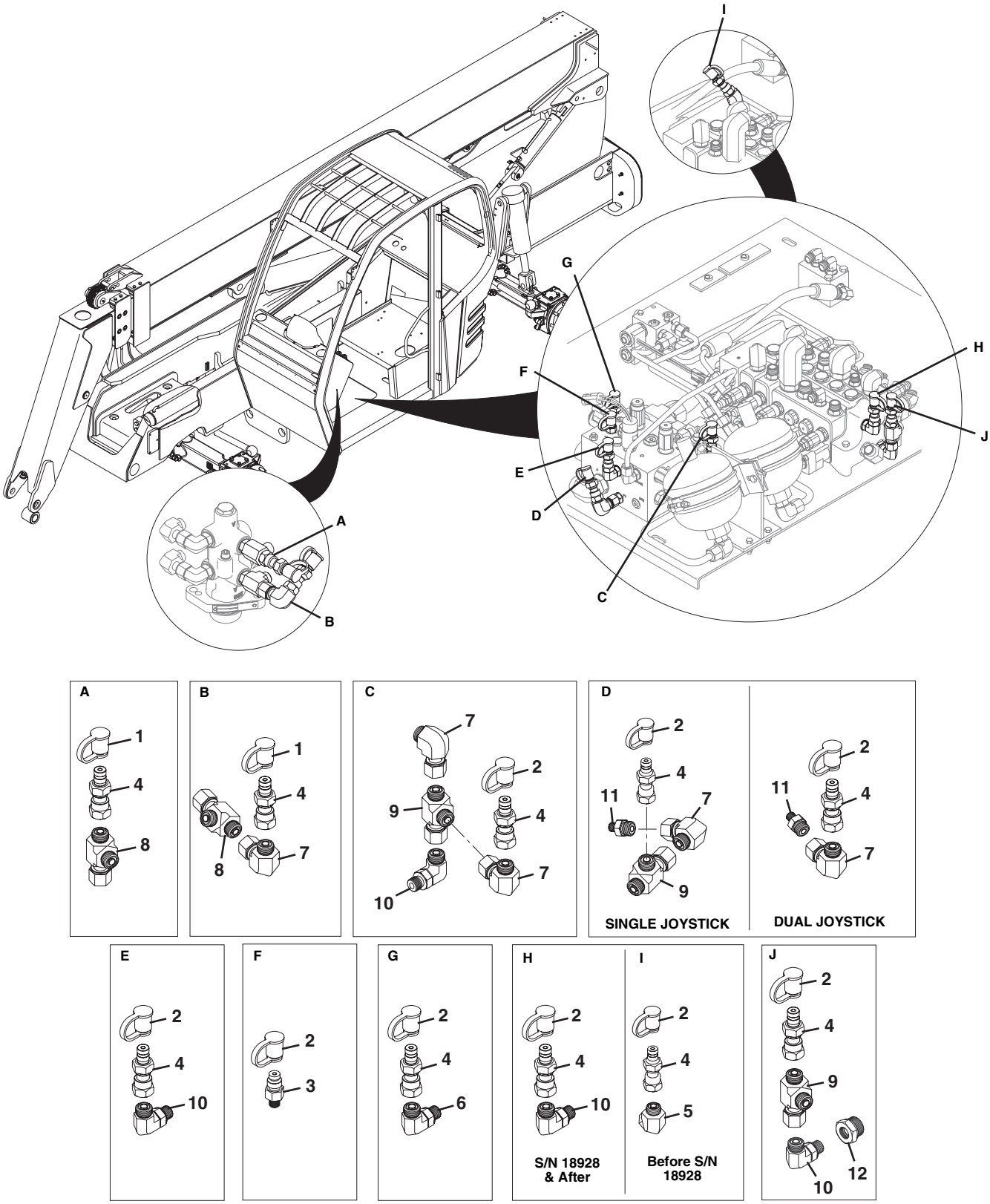

Figure 9-19 Diagnostic Pressure Taps

Item	Part Number	Qty.	Description	Rev.
1	8430032	2	BLACK DUST CAP	
2	8430098	7	YELLOW DUST CAP	
3	8430033	1	DIAGNOSTIC ADAPTER, 1/8 BODY, .438-20 MALE OR	
4	8430081	8	DIAGNOSTIC ADAPTER, 1/8 BODY	
5	8770140	1	ELBOW, 45 DEGREES	
6	2130604	1	ELBOW, 90 DEGREES	
7	2172106	4	ELBOW, 90 DEGREES, (swivel nut)	
8	2170306	2	SWIVEL RUN TEE	
9	2170706	3	SWIVEL RUN TEE	
10	2130606	3	ELBOW, 90 DEGREES	
11	2110604	1	CONNECTOR	
12	2220218	1	REDUCER/EXPANDER, #10-6	

Figure 9-20 Side Tilt Carriage Cylinder

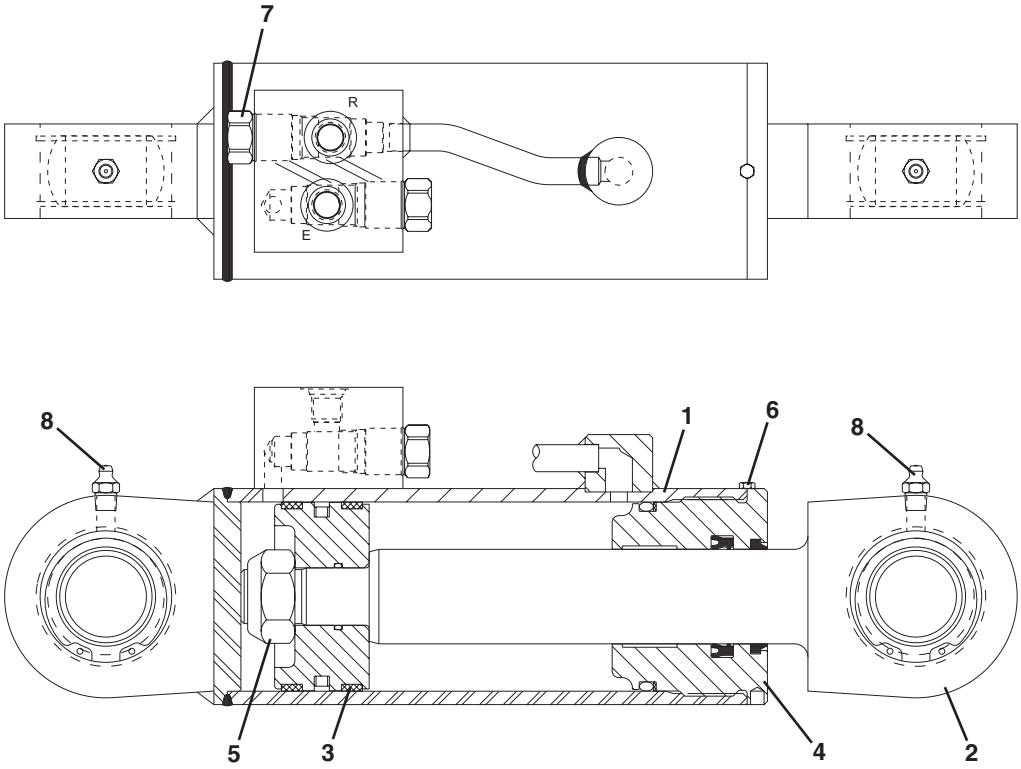

Figure 9-20 Side Tilt Carriage Cylinder

Item	Part Number	Qty.	Description	Rev.
	1001090134	1	SIDE TILT CARRIAGE CYLINDER, (includes all items)	B
1	70022038	1	BARREL ASSY	
2	70022039	1	ROD ASSY	
3	70022040	1	PISTON	
	70022042	1	SEAL KIT	
4	70021908	1	ROD BEARING	
	70022043	1	SEAL KIT	
5	90022230	1	HEX NUT	
6	7029760	1	CAPSCREW	
7	4640438	2	CHECK VALVE	
	2900770	1	SEAL KIT	
8	91044080	2	GREASE FITTING	
	70022041		SEAL KIT, (contains 70022042 & 70022043)	

Figure 9-21 72” 90 Degree Swing Carriage Cylinder

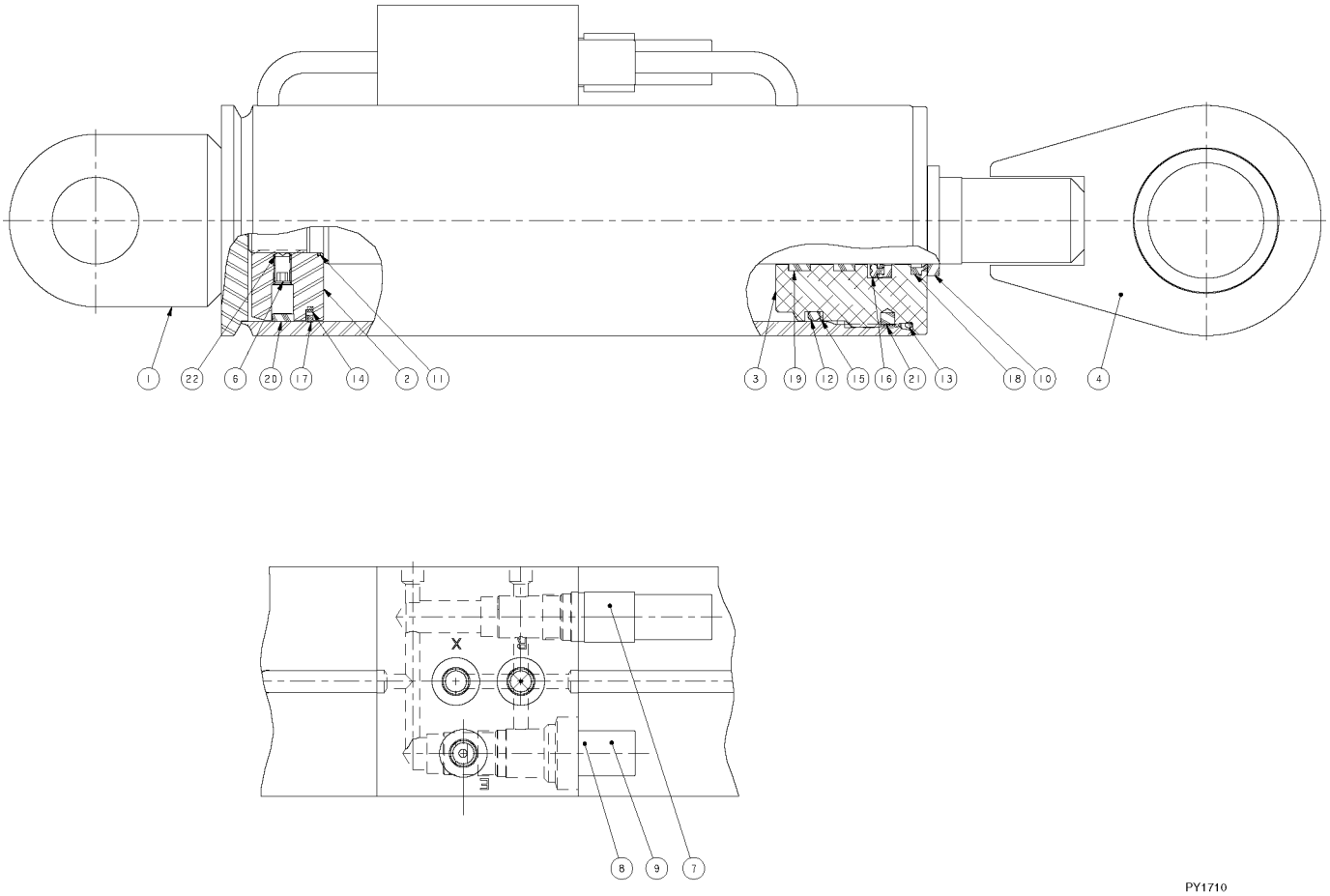

Figure 9-21 72” 90 Degree Swing Carriage Cylinder

Item	Part Number	Qty.	Description	Rev.
	1001103182	1	SWING CARRIAGE CYLINDER, (includes items 1 thru 22)	A
1	70022044	1	TUBE ASSY	
2	8035863	1	PISTON	
3	8035862	1	HEAD GLAND	
4	70022045	1	ROD ASSY	
5	70022046	1	BEARING	
6	8035536	2	SET SCREW, 5/16-18X1/2	
7	8902842	1	RELIEF VALVE, (preset to 2000 psi)	
	7024574	1	SEAL KIT	
8	8033786	1	COUNTER BALANCE VALVE, (preset to 3000 psi)	
	8205655	1	SEAL KIT	
11		1	O-RING	
12		1	O-RING	
13		1	O-RING	
14		1	SQUARE RING	
15		1	BACKUP RING	
16		1	SEAL	
17		1	PISTON SEAL	
18		1	ROD WIPER	
19		2	WEARBAND	
20		1	WEARBAND	
21		2	INSERT	
22		2	INSERT	
23	8036131	1	SEAL KIT, (includes items 11 thru 22)	
24	8033789	1	SEAL KIT	
25	8035830	1	SEAL KIT, (includes items 23 & 24)	
			NOTE: ITEM NUMBERS NOT LISTED ARE NOT USED ON THIS FIGURE	

Figure 9-22 Grapple Bucket Cylinder

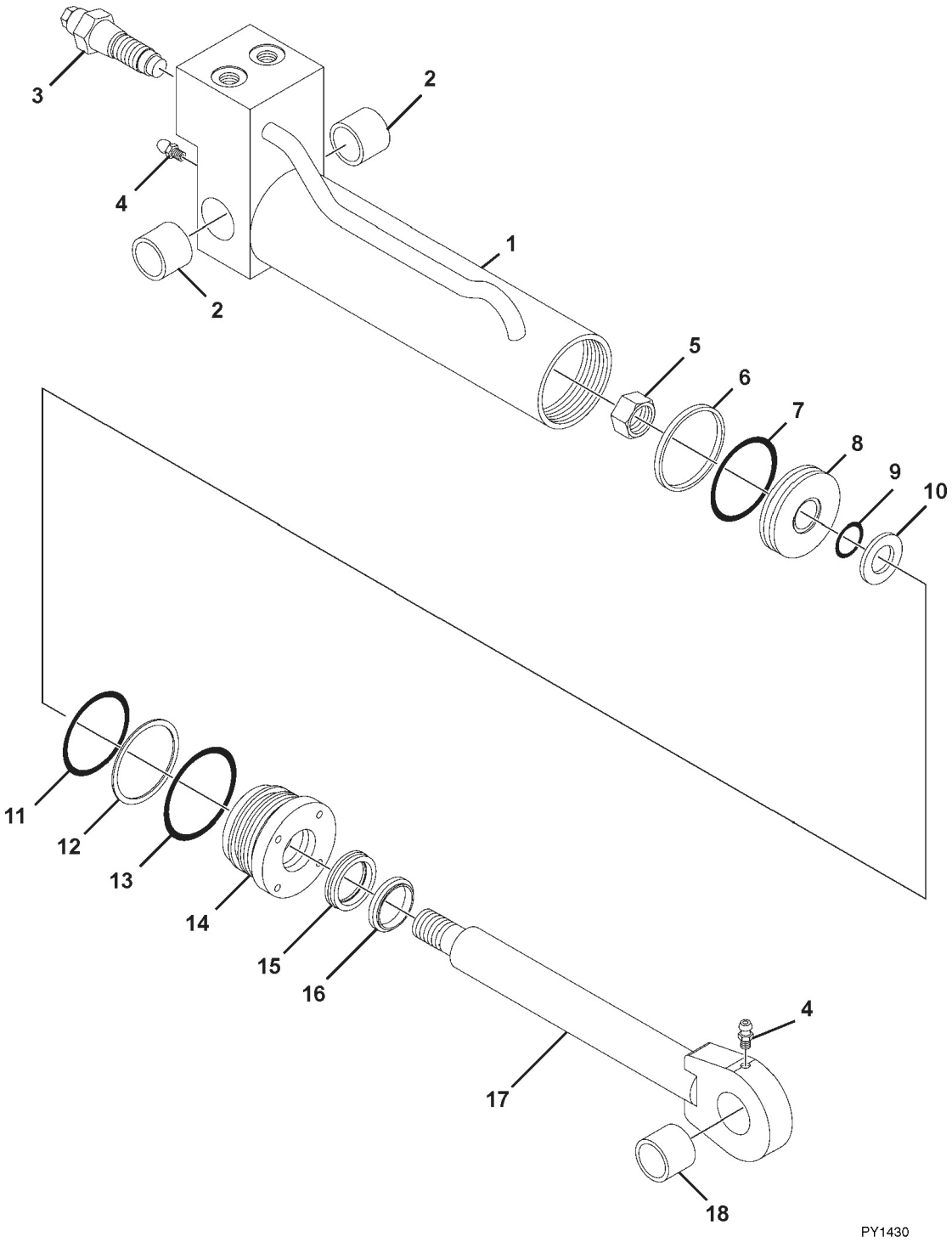

Figure 9-22 Grapple Bucket Cylinder

Item	Part Number	Qty.	Description	Rev.
	70021393	1	GRAPPLE BUCKET CYLINDER, (includes all items)	
1	70021465	1	CYLINDER TUBE	
2	70021448	2	BUSHING	
3	70021464	2	VALVE CARTRIDGE	
4	90554045	2	GREASE FITTING	
5	70021440	1	HEX NUT	
6		1	PISTON RING	
7		1	O-RING	
8	70021451	1	PISTON	
9		1	O-RING	
10	70021444	1	WASHER	
11		1	O-RING	
12		1	BACK-UP WASHER	
13		1	O-RING	
14	70021446	1	CYLINDER GLAND	
15		1	POLY-PAK SEAL	
16		1	ROD WIPER	
17	70021466	1	PISTON ROD	
18	70021447	1	BUSHING	
	70021452	1	SEAL KIT (includes items 6, 7, 9, 11 thru 13, 15 & 16)	

This Page Intentionally Left Blank

SECTION 10
ELECTRICAL

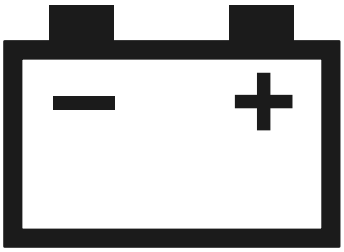

Figure 10-1 Battery & Vehicle Ground Cables

644E

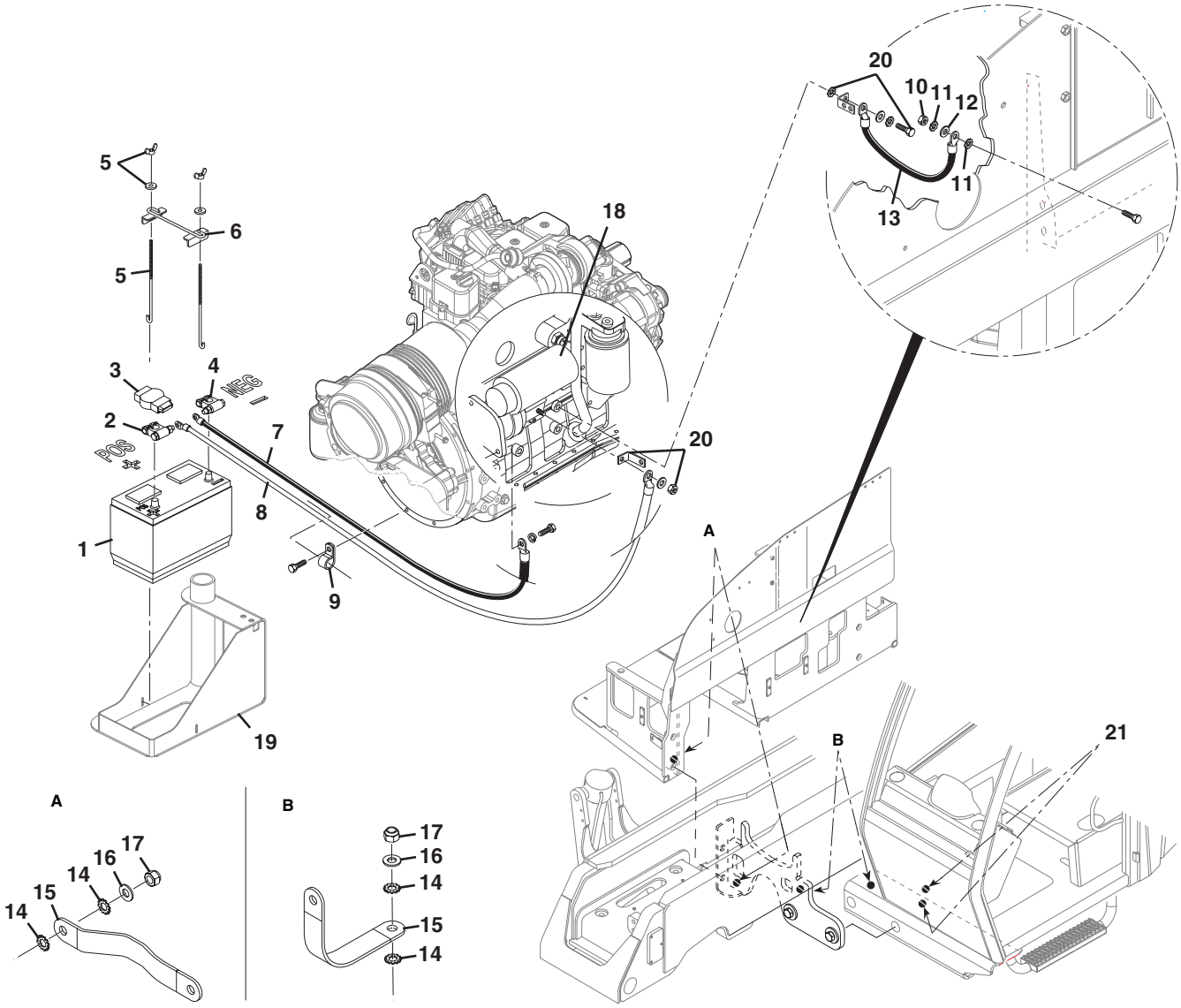

PU3140

Figure 10-1 Battery & Vehicle Ground Cables

Item	Part Number	Qty.	Description	Rev.
1	8270144	1	12 VOLT BATTERY	
2	8270148	1	POSITIVE POLARITY BATTERY CLAMP	
3	7301893	1	BATTERY TERMINAL INSULATOR	
4	8270147	1	NEGATIVE POLARITY BATTERY CLAMP	
5	8270146	2	BATTERY HOLD DOWN BOLT ASSY	
6	8270145	1	BATTERY HOLD DOWN BRACKET ASSY	
7	7300342	1	NEGATIVE BATTERY CABLE	
8	7300341	1	POSITIVE BATTERY CABLE	
9	8406201	1	TUBE CLIP, 1-1/2	
10	8305038	1	HEX LOCKNUT, M10-1.5	
11	8310046	2	LOCKWASHER, M10, (external tooth)	
12	8307221	1	PLAIN WASHER, M10	
13	7300343	1	FRAME GROUNDING CABLE	
14	8310647	4	LOCKWASHER, M8, (external tooth)	
15	6611172	2	GROUND STRAP	
16	8307222	2	PLAIN WASHER, M8	
17	8305654	2	HEX LOCKNUT, M8-1.25	
18		Ref	STARTER, (see Figure 4-1 for details)	
19		Ref	LOWER BATTERY SUPPORT, (see Figure 1-1 for details)	
20		Ref	GROUNDING HARDWARE, (see Figure 10-2 for details)	
21		Ref	GROUND CABLE, (see Figure 10-3 for details)	

Figure 10-1 Battery & Vehicle Ground Cables

944E

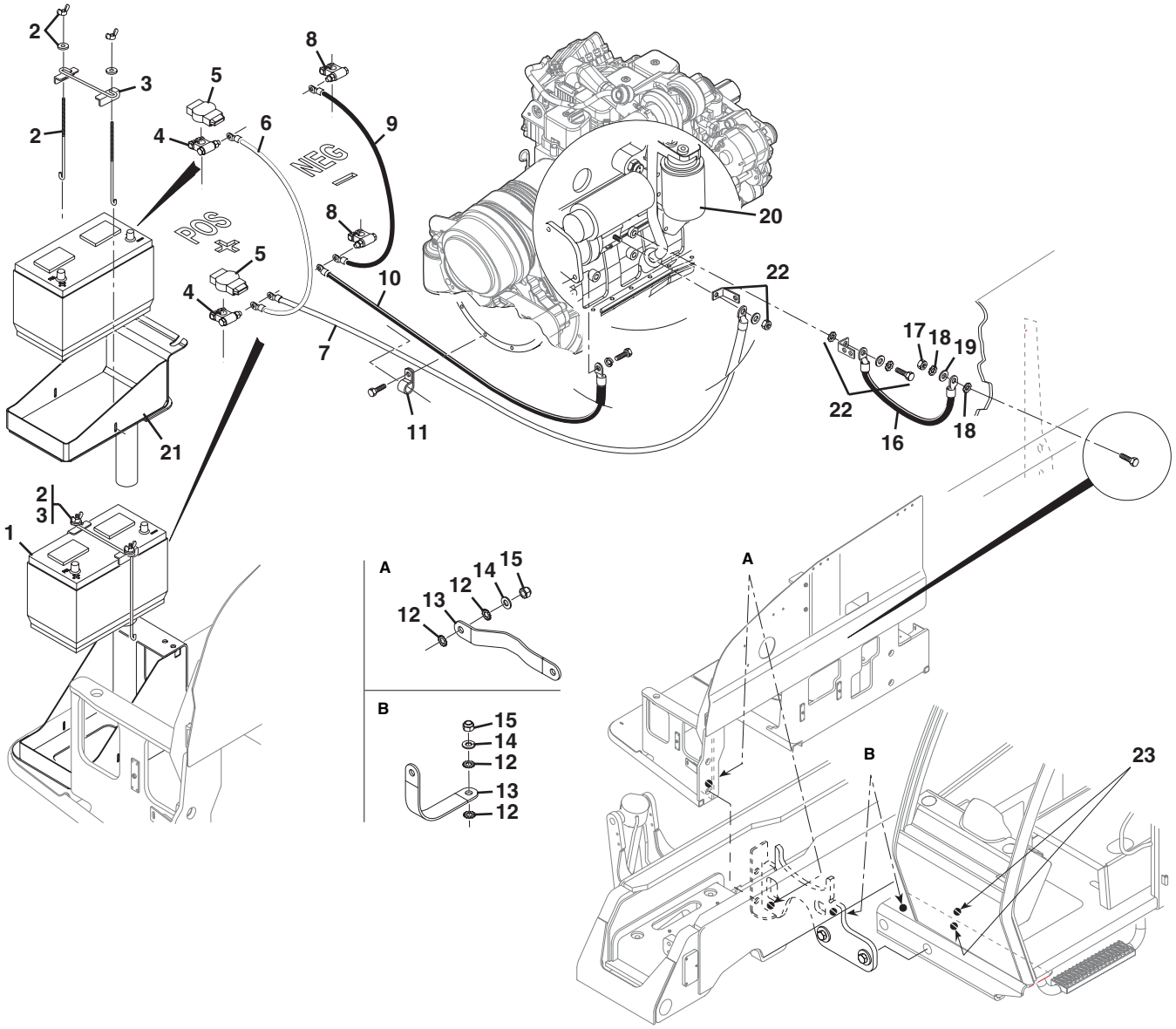

Figure 10-1 Battery & Vehicle Ground Cables

Item	Part Number	Qty.	Description	Rev.
1	8270144	2	12 VOLT BATTERY	
2	8270146	4	BATTERY HOLD DOWN BOLT ASSY	
3	8270145	2	BATTERY HOLD DOWN BRACKET ASSY	
4	8270148	2	POSITIVE POLARITY BATTERY CLAMP	
5	7301893	2	BATTERY TERMINAL INSULATOR	
6	7300433	1	POSITIVE BATTERY CABLE, (dual)	
7	7300341	1	POSITIVE BATTERY CABLE	
8	8270147	2	NEGATIVE POLARITY BATTERY CLAMP	
9	7301523	1	NEGATIVE BATTERY CABLE, (dual)	
10	7300342	1	NEGATIVE BATTERY CABLE	
11	8406201	1	TUBE CLIP, 1-1/2	
12	8310647	4	LOCKWASHER, M8, (external tooth)	
13	6611172	2	GROUND STRAP	
14	8307222	2	PLAIN WASHER, M8	
15	8305654	2	HEX LOCKNUT, M8-1.25	
16	7300343	1	FRAME GROUNDING CABLE	
17	8305038	1	HEX LOCKNUT, M10-1.5	
18	8310046	2	LOCKWASHER, M10, (external tooth)	
19	8307221	1	PLAIN WASHER, M10	
20		Ref	STARTER, (see Figure 4-1 for details)	
21		Ref	LOWER BATTERY SUPPORT, (see Figure 1-1 for details)	
22		Ref	GROUNDING HARDWARE, (see Figure 10-2 for details)	
23		Ref	GROUND CABLE, (see Figure 10-3 for details)	

Figure 10-2 Power Components

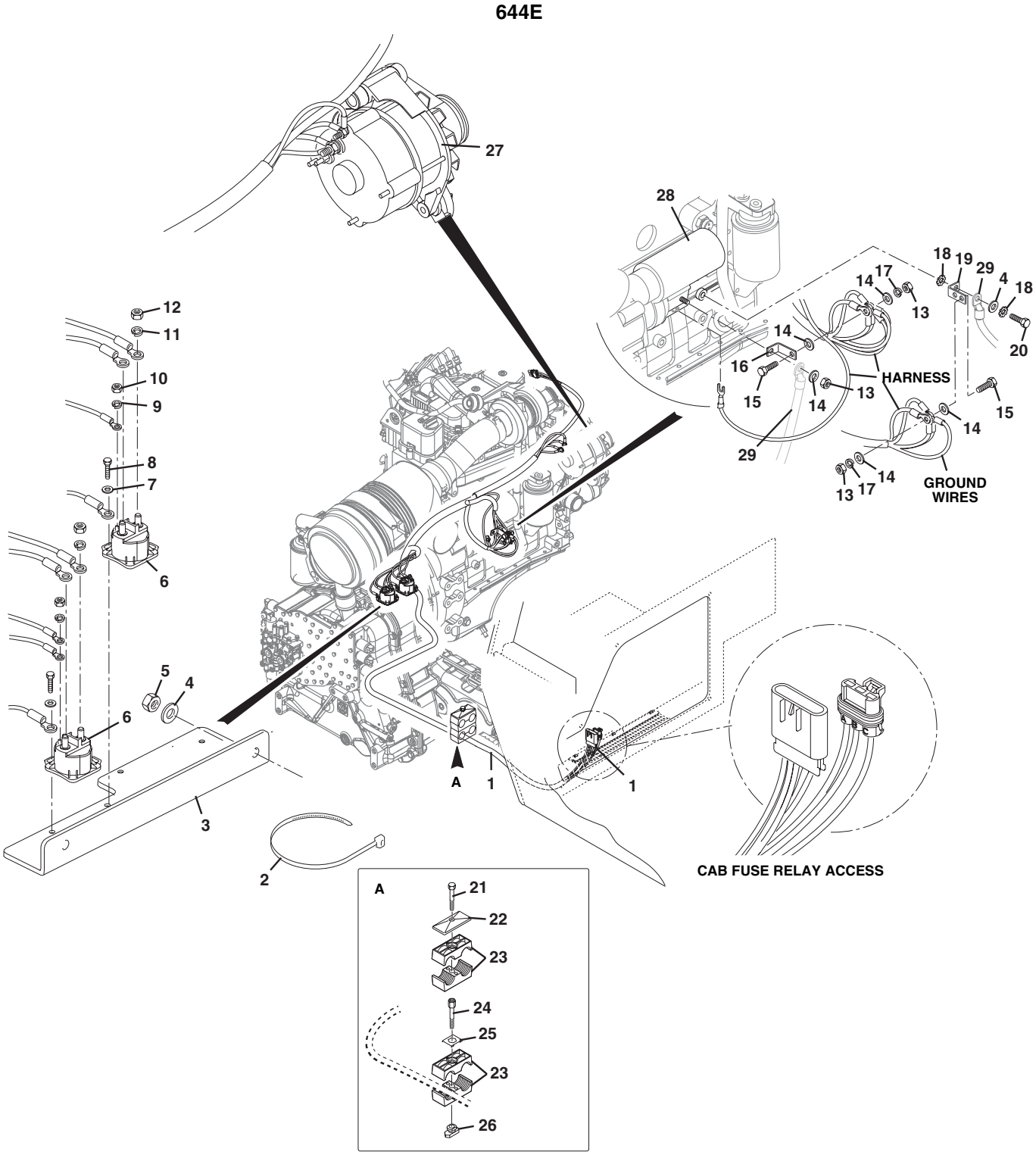

Figure 10-2 Power Components

Item	Part Number	Qty.	Description	Rev.
1	7300339	1	POWER HARNESS	
2	8584001	AR	TY-RAP	
3	7300853	1	RELAY MOUNTING BRACKET	
4	8307220	3	PLAIN WASHER, M12	
5	8305044	3	HEX NUT, M12-1.75	
6	10167789	2	3 POST w/DIODE RELAY	
7	8307219	4	PLAIN WASHER, M6	
8	8303545	4	HEX HD CAPSCREW, M6-1X16mm, PC8.8	
9	8307003	2	LOCKWASHER, #10	
10	8305003	2	HEX NUT, #10-32	
11	8307004	4	LOCKWASHER, .312	
12	8305006	4	HEX NUT, .312-18, GR2	
13	8305038	3	HEX NUT, M10-1.5	
14	8307221	5	PLAIN WASHER, M10	
15	8303777	2	HEX HD CAPSCREW, M10-1.5X35mm, PC8.8	
16	6621412	1	STARTER TERMINAL, 90 DEGREES	
17	8307023	2	SPRING LOCKWASHER, M10	
18	8310650	2	LOCKWASHER, M12, (external tooth)	
19	7300344	1	NEGATIVE STARTER BUS BAR	
20	8303533	1	HEX HD CAPSCREW, M12-1.75X20mm, PC8.8	
21	8303528	1	HEX HD CAPSCREW, M8-1.25X65mm, PC8.8	
22	8750025	1	TWIN COVER PLATE	
23	8750024	2	TWIN CLAMP SET, 1.18 DIA	
24	8750039	1	METRIC BOLT STACKING	
25	8750017	1	LOCKING PLATE	
26	8750043	1	RAIL NUT, M8	
27		Ref	ALTERNATOR, (see Figure 4-1 for details)	
28		Ref	STARTER, (see Figure 4-1 for details)	
29		Ref	FRAME GROUNDING HARDWARE, (see Figure 10-1 for details)	

Figure 10-2 Power Components

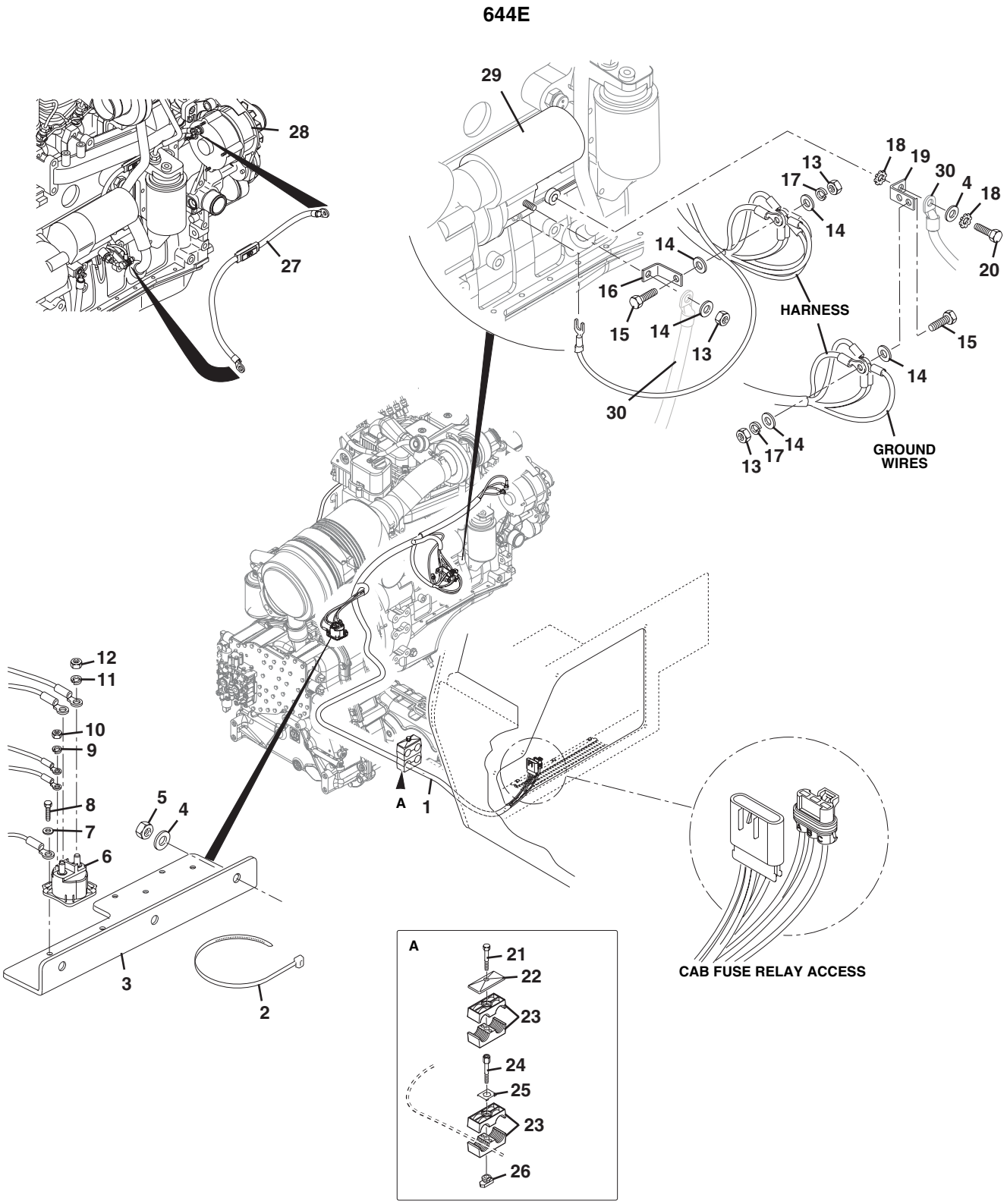

Figure 10-2 Power Components

Item	Part Number	Qty.	Description	Rev.
1	4922986	1	POWER HARNESS, **(S/N 0160003690 thru 0160014863)**	
	4923359	1	POWER HARNESS, **(S/N 0160014889 & After)**	
2	8584001	AR	TY-RAP	
3	7300853	1	RELAY MOUNTING BRACKET	
4	8307220	4	PLAIN WASHER, M12	
5	8305044	3	HEX NUT, M12-1.75	
6	10167789	1	3 POST w/DIODE RELAY	
7	8307219	2	PLAIN WASHER, M6	
8	8303545	2	HEX HD CAPSCREW, M6-1X16mm, PC8.8	
9	8307003	1	LOCKWASHER, #10	
10	8305003	1	HEX NUT, #10-32	
11	8307004	2	LOCKWASHER, .312	
12	8305006	2	HEX NUT, .312-18, GR2	
13	8305038	3	HEX NUT, M10-1.5	
14	8307221	5	PLAIN WASHER, M10	
15	8303777	2	HEX HD CAPSCREW, M10-1.5X35mm, PC8.8	
16	6621412	1	STARTER TERMINAL, 90 DEGREES	
17	8307023	2	SPRING LOCKWASHER, M10	
18	8310650	2	LOCKWASHER, M12, (external tooth)	
19	7300344	1	NEGATIVE STARTER BUS BAR	
20	8303533	1	HEX HD CAPSCREW, M12-1.75X20mm, PC8.8	
21	8303528	1	HEX HD CAPSCREW, M8-1.25X65mm, PC8.8	
22	8750025	1	TWIN COVER PLATE	
23	8750024	2	TWIN CLAMP SET, 1.18 DIA	
24	8750039	1	BOLT STACKING, METRIC	
25	8750017	1	LOCKING PLATE	
26	8750043	1	RAIL NUT, M8	
27	7310012	1	FUSIBLE LINK ASSY	
28		Ref	ALTERNATOR, (see Figure 4-1 for details)	
29		Ref	STARTER, (see Figure 4-1 for details)	
30		Ref	FRAME GROUNDING HARDWARE, (see Figure 10-1 for details)	

Figure 10-2 Power Components

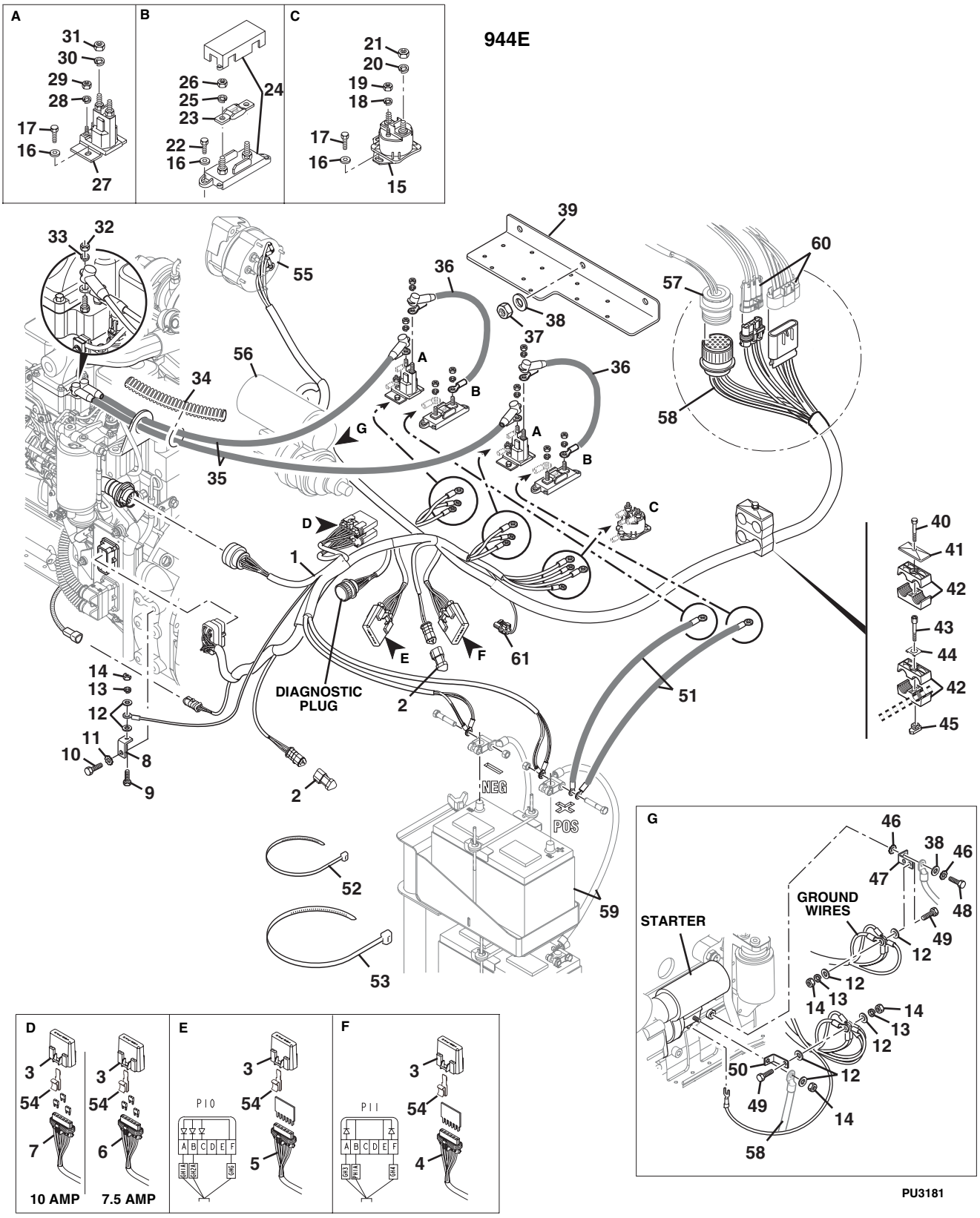

Figure 10-2 Power Components

Item	Part Number	Qty.	Description	Rev.
1	7301412	1	ECM VEHICLE POWER HARNESS, (includes items 2 thru 7), **(S/N 17569 thru 20123 & 0160002514 thru 0160010063)**	
	4923216	1	ECM VEHICLE POWER HARNESS, (includes items 2 thru 7), **(S/N 0160010100 thru 0160014857)**	
	4923358	1	ECM VEHICLE POWER HARNESS, (includes items 2 thru 7), **(S/N 0160014891 & After)**	
2	8220553	2	RESISTOR	
3	8220357	4	CLEAR VES-PAC COVER	
4	8220364	1	2 DIODE CIRCUIT BOARD	
5	8220366	1	3 DIODE CIRCUIT BOARD	
6	8229243	3	MINI FUSE, 7.5 AMP	
7	8226234	3	MINI FUSE, 10 AMP	
8	7301529	1	BUSS BAR, 90 DEGREES	
9	8303798	1	HEX HD CAPSCREW, M10-1.5X25mm, PC8.8	
10	8303533	1	HEX HD CAPSCREW, M12-1.75X20mm, PC8.8	
11	8310650	1	LOCKWASHER, M12, (external tooth)	
12	8307221	7	PLAIN WASHER, M10	
13	8307023	3	LOCKWASHER, M10	
14	8305038	4	HEX NUT, M10-1.5	
15	10167789	1	3 POST RELAY	
16	8307219	10	PLAIN WASHER, M6	
17	8303545	6	HEX HD CAPSCREW, M6-1X16mm, PC8.8	
18	8307003	1	LOCKWASHER, #10	
19	8305003	1	HEX NUT, #10-32	
20	8307004	2	LOCKWASHER, 5/16	
21	8305006	2	HEX NUT, 5/16-18	
22	8303544	4	HEX HD CAPSCREW, M6-1X20mm, PC8.8	
23	8229259	2	125A FUSE, MEGA BOLT ON	
24	8229260	2	MEGA FUSEBLOCK, (includes items 25 & 26)	
25		2	LOCKWASHER, M8	
26		2	HEX NUT, M8	
27	8225122	2	4 POST RELAY, (includes items 28 thru 31)	
28	8307003	2	WASHER, LOCK, #10	
29	8305003	2	HEX NUT, #10-32	
30		2	LOCKWASHER, 5/16	
31		2	HEX NUT, 5/16-24	
32	8305047	2	HEX LOCKNUT, M6-1	
33	8310687	2	LOCKWASHER, M6, (external tooth)	
34	7125861	1	CONDUIT, .75 IDX60 LG, (cut to fit)	
35	7301450	2	GRID HEATER CABLE, RELAY TO GRID HEATER	
36	7301448	2	GRID HEATER CABLE, FUSE TO RELAY	
37	8305044	3	HEX NUT, M12-1.75	
38	8307220	4	PLAIN WASHER, M12	
39	7300853	1	RELAY MOUNTING BRACKET	
40	8303528	1	HEX HD CAPSCREW, M8-1.25X65mm, PC8.8	
41	8750025	1	TWIN COVER PLATE	
42	8750024	2	TWIN CLAMP SET, 1.18 DIA	
43	8750039	1	BOLT STACKING, METRIC	
44	8750017	1	LOCKING PLATE	

Figure 10-2 Power Components (Continued)

Item	Part Number	Qty.	Description	Rev.
45	8750043	1	RAIL NUT, M8	
46	8310650	2	LOCKWASHER, M12, (external tooth)	
47	7300344	1	NEGATIVE STARTER BUS BAR	
48	8303533	1	HEX HD CAPSCREW, M12-1.75X20mm, PC8.8	
49	8303777	2	HEX HD CAPSCREW, M10-15X35mm, PC8.8	
50	6621412	1	STARTER TERMINAL, 90 DEGREES	
51	7301449	2	GRID HEATER CABLE, BATTERY TO FUSE	
52	8584001	AR	TY-RAP	
53	8584003	AR	TY-RAP	
54	1380165	4	MOUNTING CLIP, **(644E S/N 0160012410 & After), (944E S/N 0160012745 & After)**	
55		Ref	ALTERNATOR, (see Figure 4-1 for details)	
56		Ref	STARTER, (see Figure 4-1 for details)	
57		Ref	ECM CAB HARNESS, (see Figure 7-2 for details)	
58		Ref	FUSE & RELAY ACCESS, (see Figure 6-5 for details)	
59		Ref	POSITIVE BATTERY CABLE, (see Figure 10-1 for details)	
60		Ref	OPEN CAB HARNESS, (see Figure 10-3 for details)	
61		Ref	SENSOR HARNESS, (see Figure 10-6 for details)	

Figure 10-2 Power Components (Continued)

Item	Part Number	Qty.	Description	Rev.

Figure 10-3 Open Cab Electrical Components

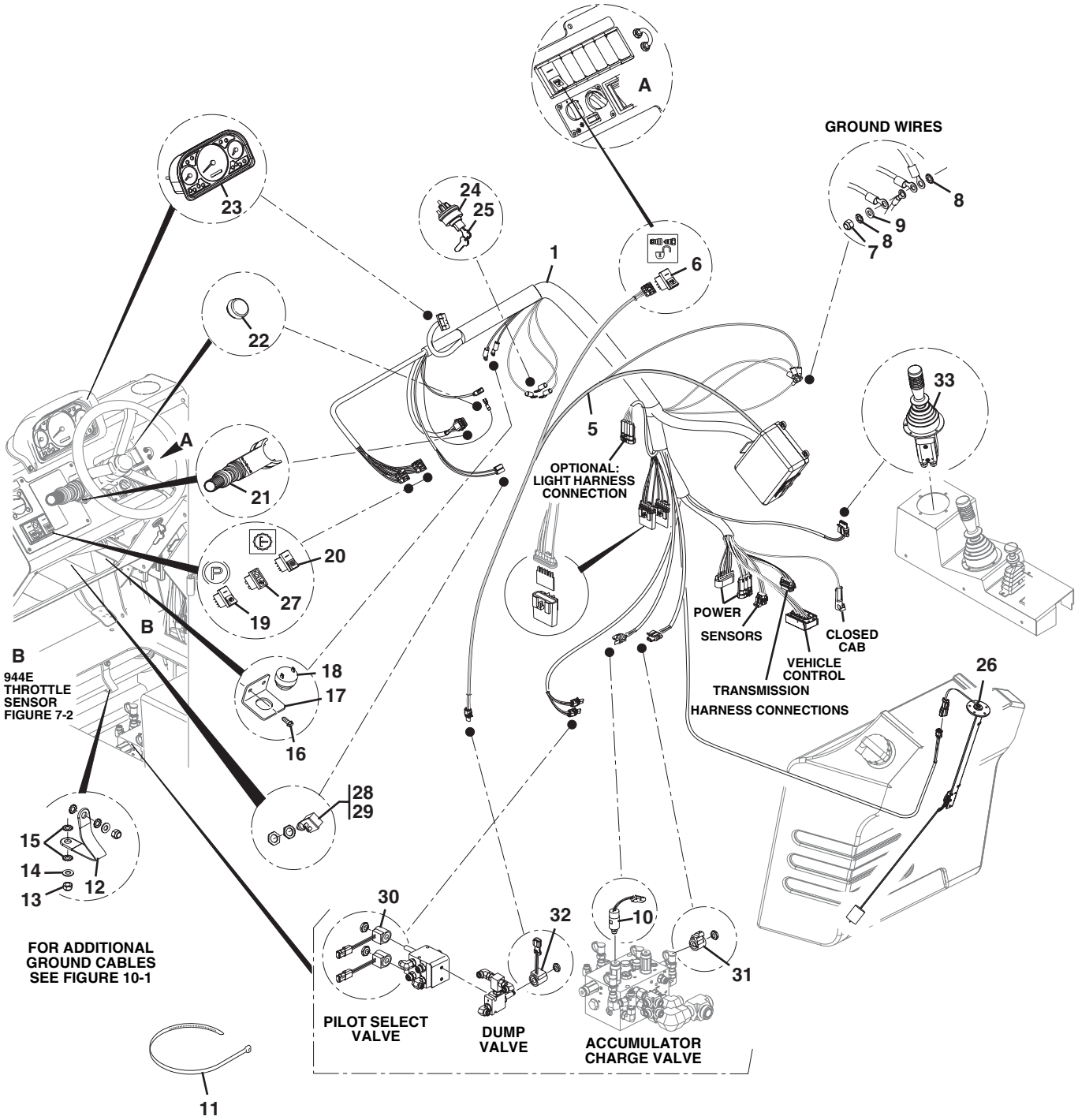

PU2460

Figure 10-3 Open Cab Electrical Components

Item	Part Number	Qty.	Description	Rev.
1		1	OPEN CAB HARNESS, (replaced by 7300336)	
2	8220362	1	FUSE/RELAY BOX, (see Figure 10-5 for details)	
3	8220357	2	CLEAR VES-PAC COVER	
4	8220363	2	CIRCUIT BOARD, 3 DIODE	
5	7301600	1	AUXILIARY HYDRAULIC DUMP VALVE HARNESS	
6	8223050	1	AUXILIARY HYDRAULIC DUMP VALVE SWITCH	
7	8305652	1	HEX LOCKNUT, M6-1.0	
8	8310687	2	LOCKWASHER, M6, (external tooth)	
9	8307219	1	PLAIN WASHER, M6, (metric)	
10	8223241	1	BRAKE PRESSURE SWITCH	
11	8584001	AR	TY-RAP	
12	6611172	1	GROUND CABLE, CAB TO CAB SUPPORT	
13	8305654	2	HEX LOCKNUT, M8-1.25	
14	8307222	2	PLAIN WASHER, M8	
15	8310647	4	LOCKWASHER, M8, (external tooth)	
16	8310683	2	HEX HD SELF TAPPING SCREW, 5/16-18X3/4	
17	7301147	1	BUZZER BRACKET	
18	8270627	1	ALARM BUZZER, 12V	
19	8223054	1	PARK BRAKE SWITCH	
20	8223071	1	TRANSMISSION DISCONNECT SWITCH	
21	8223072	1	SELECTOR TRANSMISSION CONTROL, (includes attaching hardware)	
22	8720017	1	HORN BUTTON w/COVER SWITCH	
23	8220360	1	DASH PANEL	
24	1101202	1	IGNITION SWITCH, (includes item 25)	
25	1101203	1	IGNITION KEY, (set of 2 keys)	
26		Ref	FUEL LEVEL SENDER, (see Figure 4-2 for details)	
27		Ref	ECM INDICATOR SWITCH, (see Figure 7-2 for details)	
28		Ref	STABIL-TRAK SWITCH, (see Figure 7-1 for details)	
29		Ref	BRAKE SWITCH, (see Figure 12-1 for details)	
30		Ref	PILOT SELECT VALVE, (see Figure 9-10 for details)	
31		Ref	ACCUMULATOR CHARGE VALVE, (see Figure 9-12 for details)	
32		Ref	DUMP VALVE, (see Figure 9-14 for details)	
33		Ref	JOYSTICK CONTROL VALVE, (see Figure 8-9 for details)	

Figure 10-3 Open Cab Electrical Components

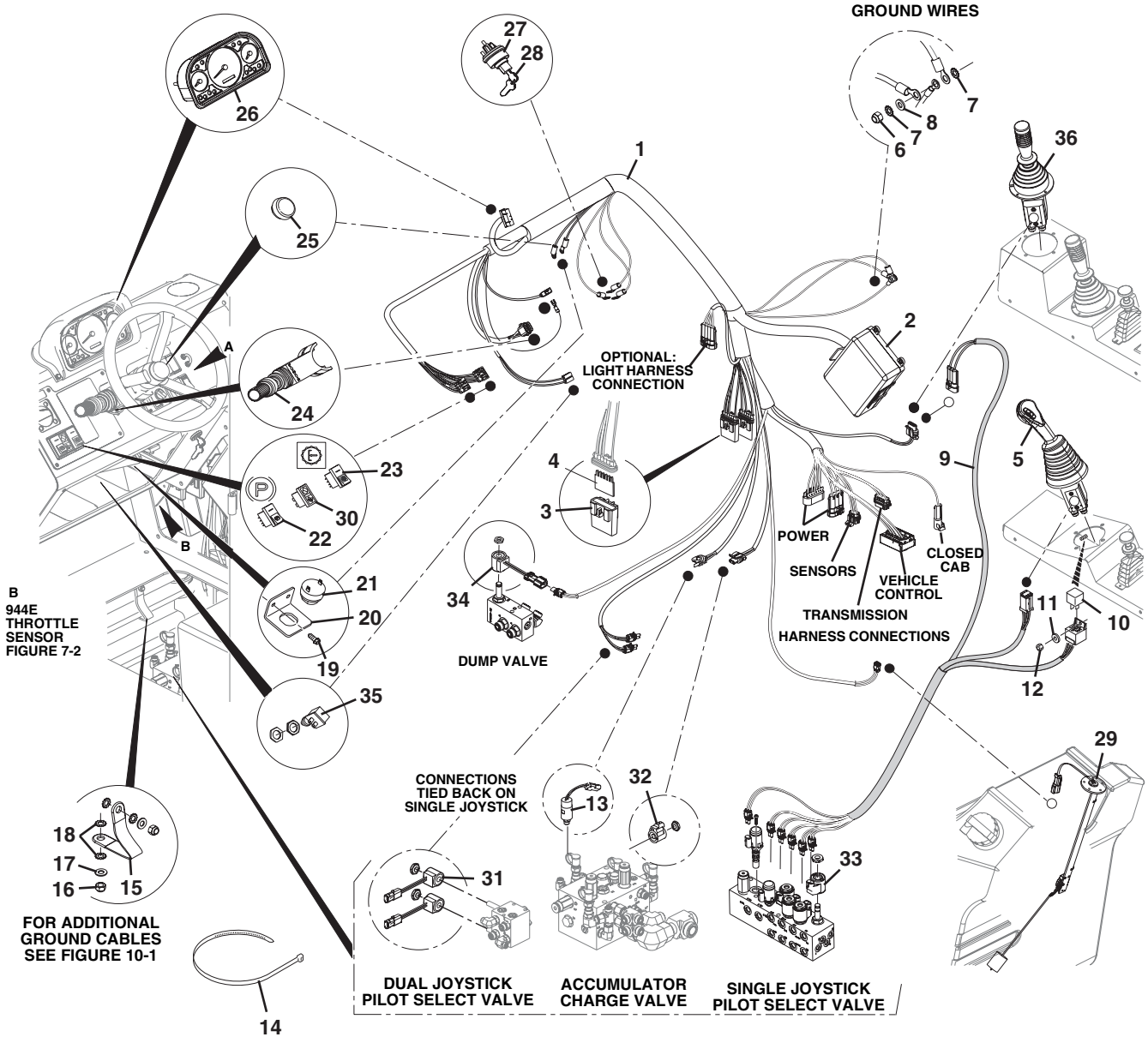

Figure 10-3 Open Cab Electrical Components

Item	Part Number	Qty.	Description	Rev.
1	7300336	1	OPEN CAB HARNESS, (includes items 2 thru 4), **(644E S/N 19042 thru 20123 & 0160002514 thru 0160008489), (944E S/N 19042 thru 20123 & 0160002514 thru 0160008510)**	
	4923054	1	OPEN CAB HARNESS, (includes items 2 thru 4), **(644E S/N 0160008490 thru 0160034284), (944E S/N 0160008511 thru 0160034278)**	B
2	8220362	1	FUSE/RELAY BOX, (see Figure 10-5 for details)	
3	8220357	2	CLEAR VES-PAC COVER	
4	8220363	2	CIRCUIT BOARD, 3 DIODE	
5		Ref	JOYSTICK CONTROL VALVE, (see Figure 7-5 for details)	
6	8305652	1	HEX LOCKNUT, M6-1.0	
7	8310687	2	LOCKWASHER, M6, (external tooth)	
8	8307219	1	PLAIN WASHER, M6	
9	7300353	1	SINGLE JOYSTICK HARNESS	
10	8225119	1	SEALED RELAY	
11	8310390	1	WASHER, M5	
12	8310188	1	HEX NUT, M5-0.8	
13	8223241	1	BRAKE PRESSURE SWITCH	
14	8584001	AR	TY-RAP	
15	6611172	1	GROUND CABLE, CAB TO CAB SUPPORT	
16	8305654	2	HEX LOCKNUT, M8-1.25	
17	8307222	2	PLAIN WASHER, M8	
18	8310647	4	LOCKWASHER, M8, (external tooth)	
19	8310683	2	HEX HD SELF TAPPING, 5/16-18X3/4	
20	7301147	1	BUZZER BRACKET	
21	8270627	1	ALARM BUZZER, 12V	
22	8223054	1	PARK BRAKE SWITCH	
23	8223071	1	TRANSMISSION DISCONNECT SWITCH	
24	8223072	1	SELECTOR TRANSMISSION CONTROL, (includes attaching hardware)	
25	7138878	1	HORN BUTTON w/COVER SWITCH	
26	8220360	1	DASH PANEL	
27	1101202	1	IGNITION SWITCH, (includes item 28)	
28	1101203	1	IGNITION KEY, (set of 2 keys)	
29		Ref	FUEL LEVEL SENDER, (see Figure 4-2 for details)	
30		Ref	ECM INDICATOR SWITCH, (see Figure 7-2 for details)	
31		Ref	PILOT SELECT VALVE, (see Figure 9-10 for details)	
32		Ref	ACCUMULATOR CHARGE VALVE, (see Figure 9-12 for details)	
33		Ref	SOLENOID, (see Figure 9-11 for details)	
34		Ref	DUMP VALVE, (see Figure 9-14 for details)	
35		Ref	STABIL-TRAK SWITCH, (see Figure 7-1 for details)	
36		Ref	JOYSTICK CONTROL, (see Figure 8-9 for details)	

Figure 10-3 Open Cab Electrical Components

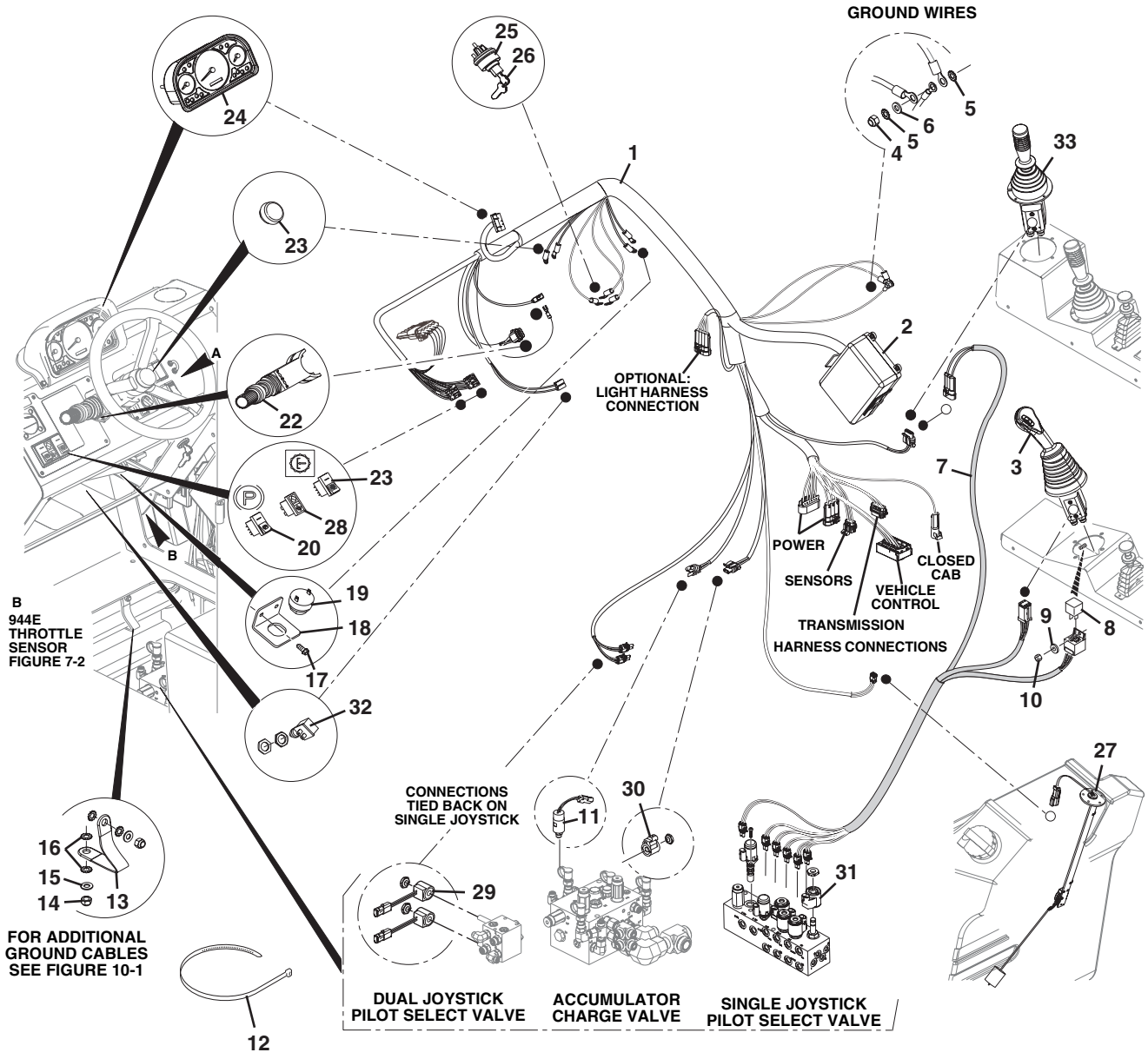

Figure 10-3 Open Cab Electrical Components

Item	Part Number	Qty.	Description	Rev.
1	4923604	1	OPEN CAB HARNESS, (includes items 2 thru 4)	A
2	70021815	1	FUSE/RELAY BOX, (see Figure 10-5 for details)	
3		Ref	JOYSTICK CONTROL VALVE, (see Figure 7-5 for details)	
4	8305652	1	HEX LOCKNUT, M6-1.0	
5	8310687	2	LOCKWASHER, M6, (external tooth)	
6	8307219	1	PLAIN WASHER, M6	
7	7300353	1	SINGLE JOYSTICK HARNESS	
8	8225119	1	SEALED RELAY	
9	8310390	1	WASHER, M5	
10	8310188	1	HEX NUT, M5-0.8	
11	8223241	1	BRAKE PRESSURE SWITCH, **(644-E excluding S/N 0160036724, 0160036811, 0160036907 & 0160037012)**, **(944-E excluding S/N 0160034634, 0160036710, 0160036722, 0160036735 & 0160036738)**	
	1001103494	1	BRAKE PRESSURE SWITCH, **(644-E S/N 0160036724, 0160036811, 0160036907 & 0160037012)**, **(944-E S/N 0160034634, 0160036710, 0160036722, 0160036735 & 0160036738)**	
12	8584001	AR	TY-RAP	
13	6611172	1	GROUND CABLE, CAB TO CAB SUPPORT	
14	8305654	2	HEX LOCKNUT, M8-1.25	
15	8307222	2	PLAIN WASHER, M8	
16	8310647	4	LOCKWASHER, M8, (external tooth)	
17	8310683	2	HEX HD SELF TAPPING, 5/16-18X3/4	
18	7301147	1	BUZZER BRACKET	
19	8270627	1	ALARM BUZZER, 12V	
20	8223054	1	PARK BRAKE SWITCH	
21	8223071	1	TRANSMISSION DISCONNECT SWITCH	
22	8223072	1	SELECTOR TRANSMISSION CONTROL, (includes attaching hardware)	
23	7138878	1	HORN BUTTON w/COVER SWITCH	
24	8220360	1	DASH PANEL	
25	1101202	1	IGNITION SWITCH, (includes item 28)	
26	1101203	1	IGNITION KEY, (set of 2 keys)	
27		Ref	FUEL LEVEL SENDER, (see Figure 4-2 for details)	
28		Ref	ECM INDICATOR SWITCH, (see Figure 7-2 for details)	
29		Ref	PILOT SELECT VALVE, (see Figure 9-10 for details)	
30		Ref	ACCUMULATOR CHARGE VALVE, (see Figure 9-12 for details)	
31		Ref	SOLENOID, (see Figure 9-11 for details)	
32		Ref	STABIL-TRAK SWITCH, (see Figure 7-1 for details)	
33		Ref	JOYSTICK CONTROL, (see Figure 8-9 for details)	

Figure 10-4 Closed Cab Electrical Components

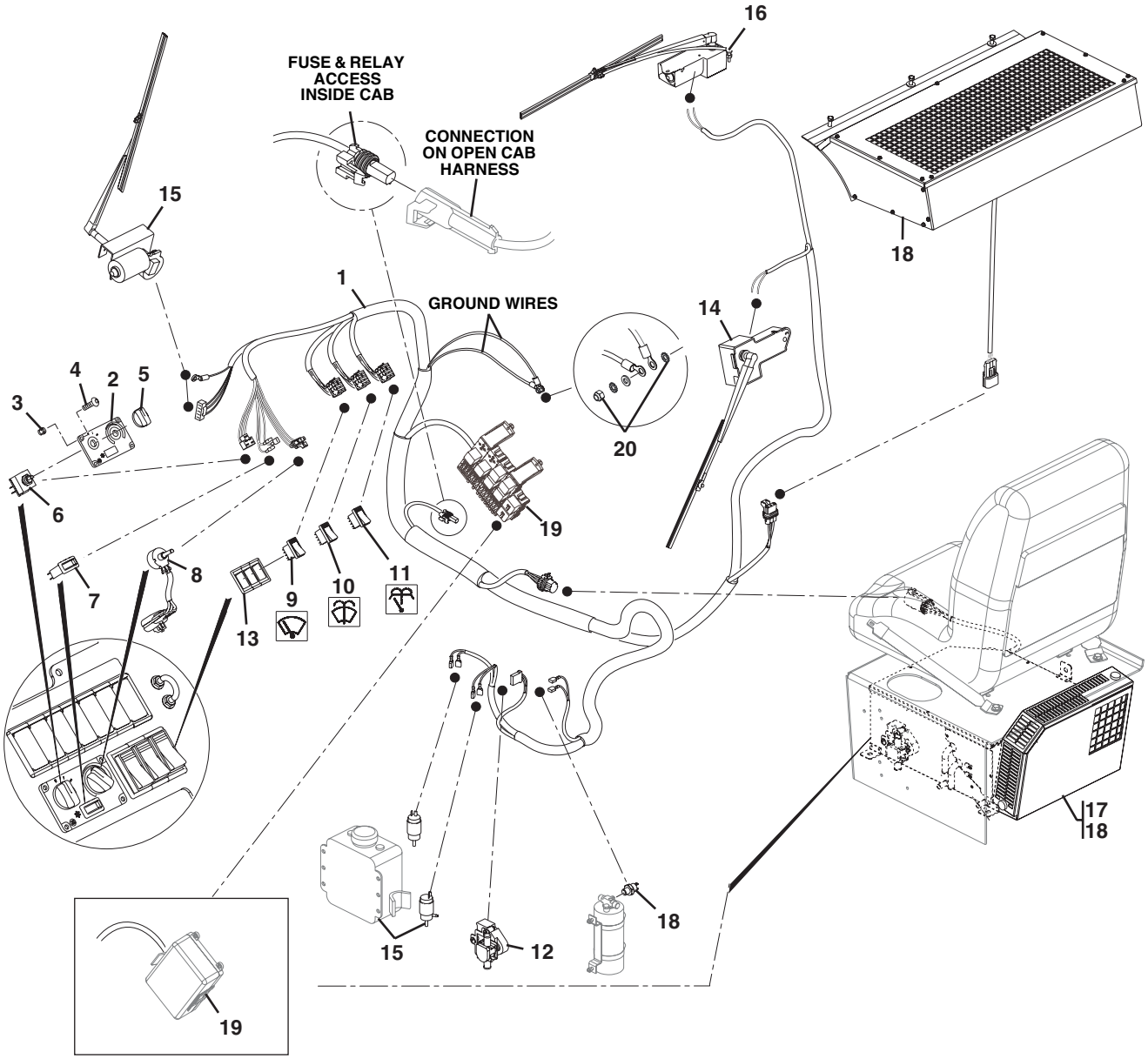

644E S/N 19042 thru 20123 & 0160002514 thru 0160034284
944E S/N 19042 thru 20123 & 0160002514 thru 0160034278

PU2481

Figure 10-4 Closed Cab Electrical Components

Item	Part Number	Qty.	Description	Rev.
1	7300411	1	CLOSED CAB HARNESS, **(644E S/N 17569 thru 20123 & 0160002514 thru 0160034284), (944E S/N 17569 thru 20123 & 0160002514 thru 0160034278)**	H
	1001092360	1	CLOSED CAB HARNESS, **(644E S/N 0160034285 & After), (944E S/N 0160034279 & After)**	A
2	7301260	1	HEATER CONTROL PANEL, (includes items 5, 6 & 8)	
3	8310392	4	HEX LOCKNUT, #10-32	
4	8310358	4	BUTTON HD CAPSCREW, #10-32	
5	8036438	2	POSITIONING KNOB	
6	8036463	1	BLOWER CONTROL SWITCH	
7	7301265	1	AIR CONDITIONING ROCKER SWITCH	
8	8036603	1	TEMPERATURE CONTROL SWITCH	
9	8223043	1	WINDSHIELD WIPER SWITCH	
10	8223044	1	WINDSHIELD WASHER SWITCH	
11	8223040	1	ROOF WIPER/WASHER SWITCH	
12	7301261	1	ELECTRIC HEAT VALVE	
13		Ref	3 POSITION BEZEL SWITCH, (see Figure 6-5 for details)	
14		Ref	REAR WINDOW WIPER ASSY, (see Figure 6-7 for details)	
15		Ref	FRONT WINDSHIELD WIPER ASSY, (see Figure 6-8 for details)	
16		Ref	SKYLIGHT WIPER ASSY, (see Figure 6-9 for details)	
17		Ref	HEATER SYSTEM, (see Figure 6-12 for details)	
18		Ref	AIR CONDITIONING SYSTEM, (see Figure 6-13 for details)	
19		Ref	FUSE/RELAY BOX, (see Figure 10-5 for details)	
20		Ref	GROUND WIRES, (see Figure 10-3 for details)	

Figure 10-5 Fuses, Relays & Flasher Box

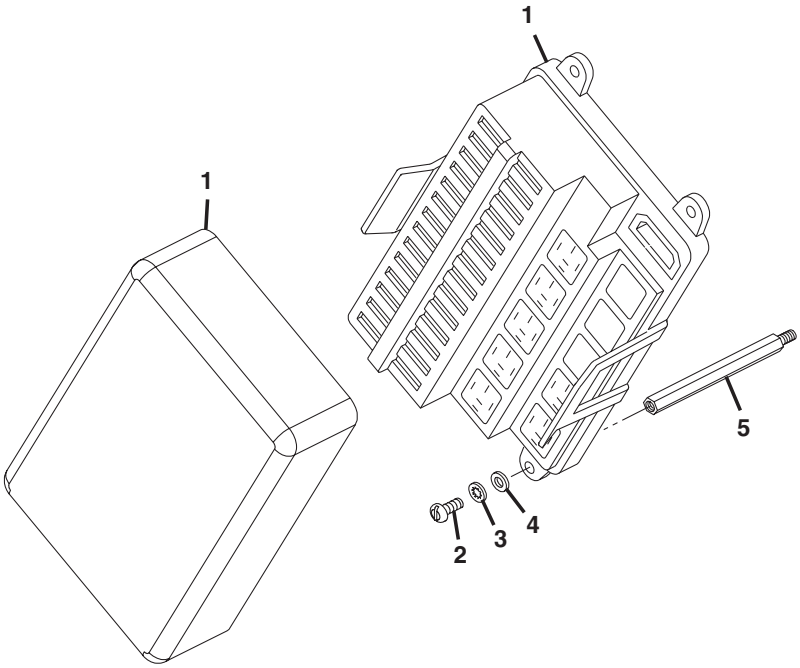

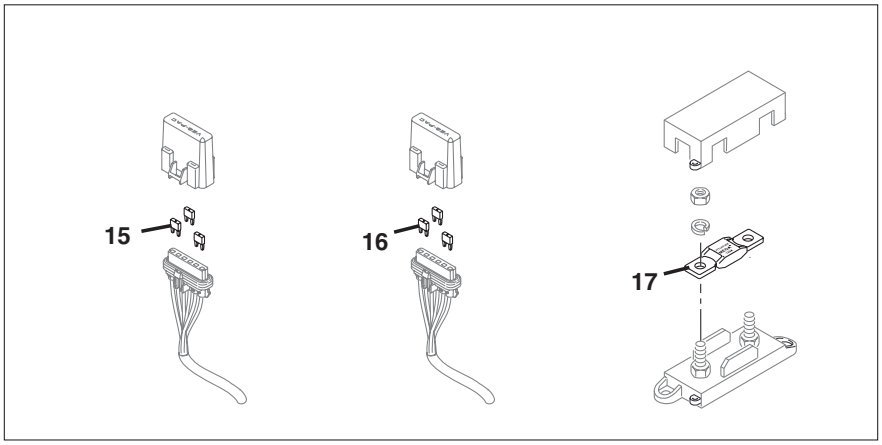

944E ECM POWER HARNESS FIGURE 10-2

PU3191

Figure 10-5 Fuses, Relays & Flasher Box (Continued)

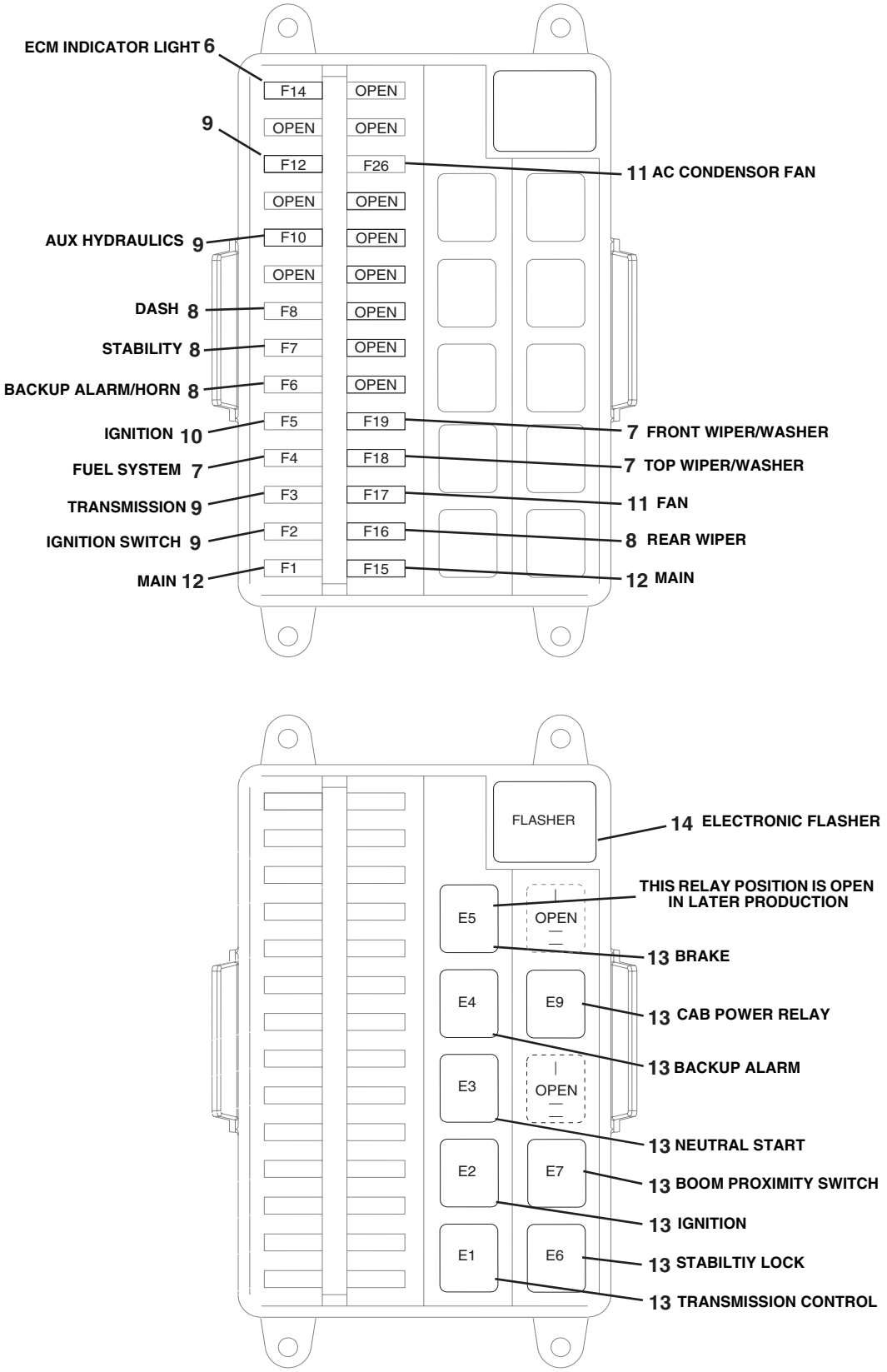

Figure 10-5 Fuses, Relays & Flasher Box

Item	Part Number	Qty.	Description	Rev.
1	8220362	1	FUSE/RELAY BOX	
2	8310642	4	SLOTTED PAN HD SCREW, M5-0.8X12mm	
3	8310641	4	LOCKWASHER, M5, (internal tooth)	
4	8310390	4	PLAIN WASHER, M5	
5	8310640	4	STEEL HEX STANDOFF, 80mm LONG	
6	8229263	1	3 AMP FUSE, (violet), AUTO BLADE TYPE	
7	8229233	3	7.5 AMP FUSE, (brown), AUTO BLADE TYPE	
8	8229234	4	10 AMP FUSE, (red), AUTO BLADE TYPE	
9	8229237	4	15 AMP FUSE, (blue), AUTO BLADE TYPE	
10	8229235	1	20 AMP FUSE, (yellow), AUTO BLADE TYPE	
11	8229262	2	25 AMP FUSE, (clear), AUTO BLADE TYPE	
12	8229238	2	40 AMP FUSE, (orange), AUTO BLADE TYPE	
13	8225119	9	12V SEALED RELAY, (early production)	
14	8270628	1	ELECTRONIC FLASHER, 12V	
15	8229243	3	MINI FUSE, 7.5 AMP	
16	8226234	3	MINI FUSE, 10 AMP	
17	8229259	2	125 AMP FUSE, MEGA BOLT ON	

Figure 10-5 Fuses, Relays & Flasher Box (Continued)

Item	Part Number	Qty.	Description	Rev.

Figure 10-5 Fuses, Relays & Flasher Box

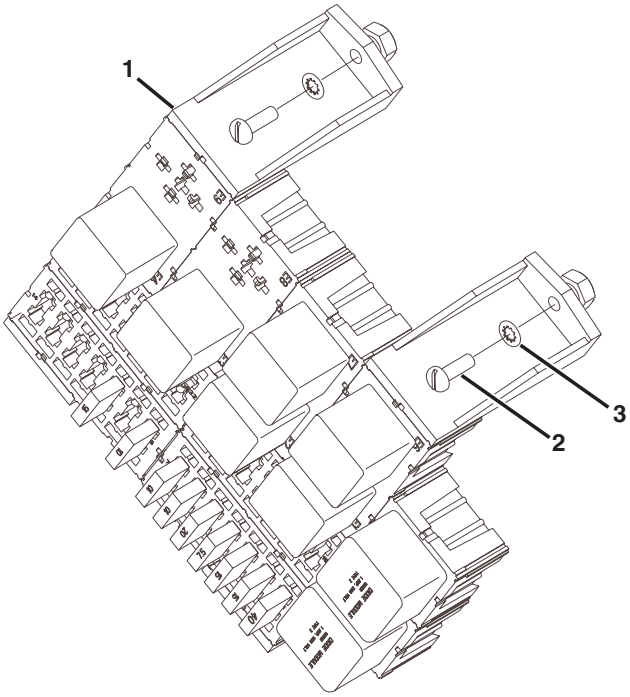

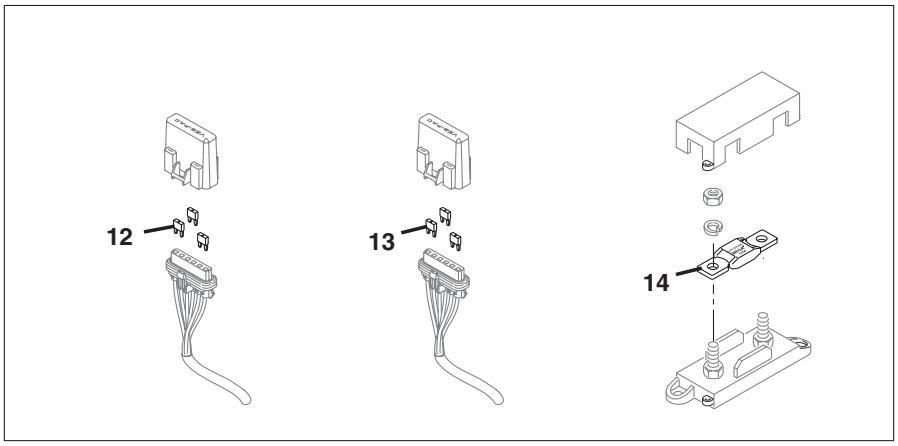

944E ECM POWER HARNESS FIGURE 10-2

PU3192

Figure 10-5 Fuses, Relays & Flasher Box (Continued)

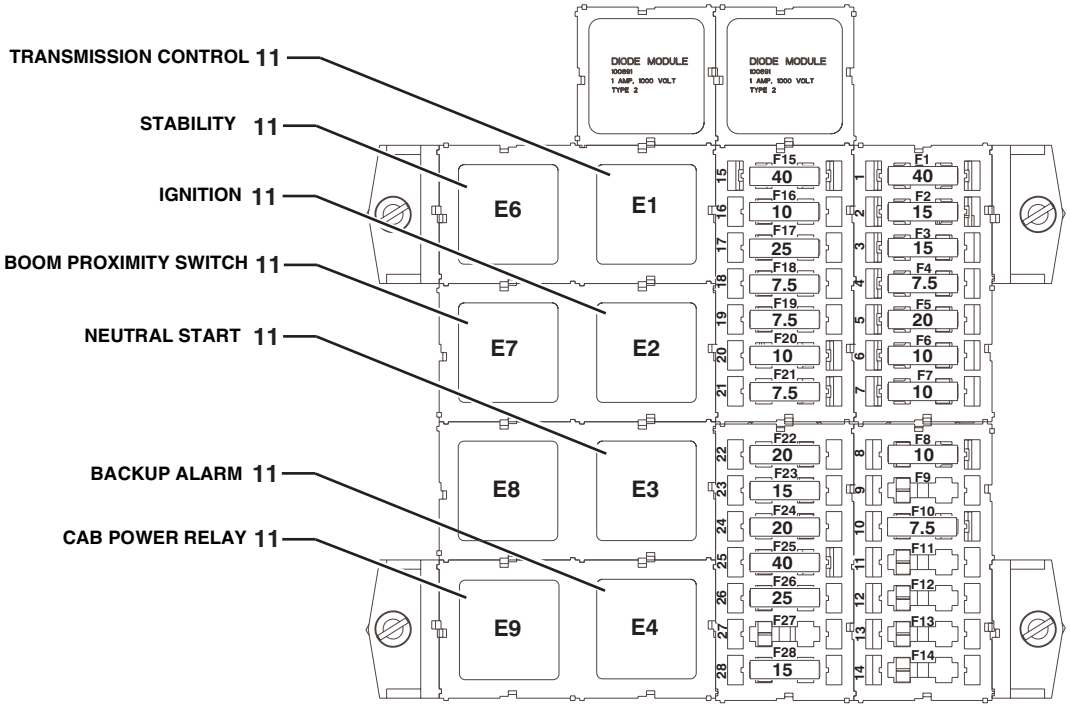

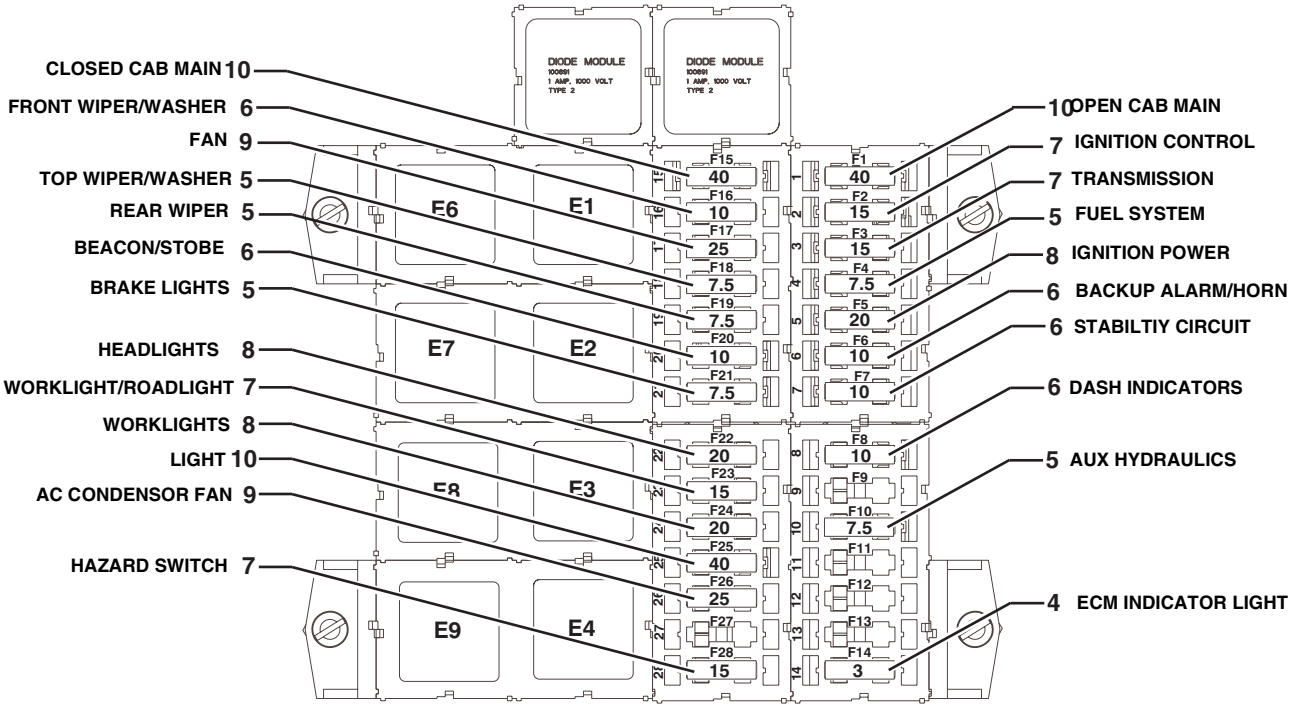

PU3291

Figure 10-5 Fuses, Relays & Flasher Box

Item	Part Number	Qty.	Description	Rev.
1	70021815	1	FUSE/RELAY BOX	
2	8303992	4	SLOTTED PAN HD SCREW, M5-0.8X15mm	
3	8310641	4	LOCKWASHER, M5, (internal tooth)	
4	8229263	1	3 AMP FUSE, (violet), AUTO BLADE TYPE	
5	8229233	5	7.5 AMP FUSE, (brown), AUTO BLADE TYPE	
6	8229234	5	10 AMP FUSE, (red), AUTO BLADE TYPE	
7	8229237	4	15 AMP FUSE, (blue), AUTO BLADE TYPE	
8	8229235	3	20 AMP FUSE, (yellow), AUTO BLADE TYPE	
9	8229262	2	25 AMP FUSE, (clear), AUTO BLADE TYPE	
10	8229238	3	40 AMP FUSE, (orange), AUTO BLADE TYPE	
11	8225119	7	12V SEALED RELAY	
12	8229243	3	MINI FUSE, 7.5 AMP	
13	8226234	3	MINI FUSE, 10 AMP	
14	8229259	2	125 AMP FUSE, MEGA BOLT ON	

Figure 10-5 Fuses, Relays & Flasher Box (Continued)

Item	Part Number	Qty.	Description	Rev.

Figure 10-6 Sensor Components

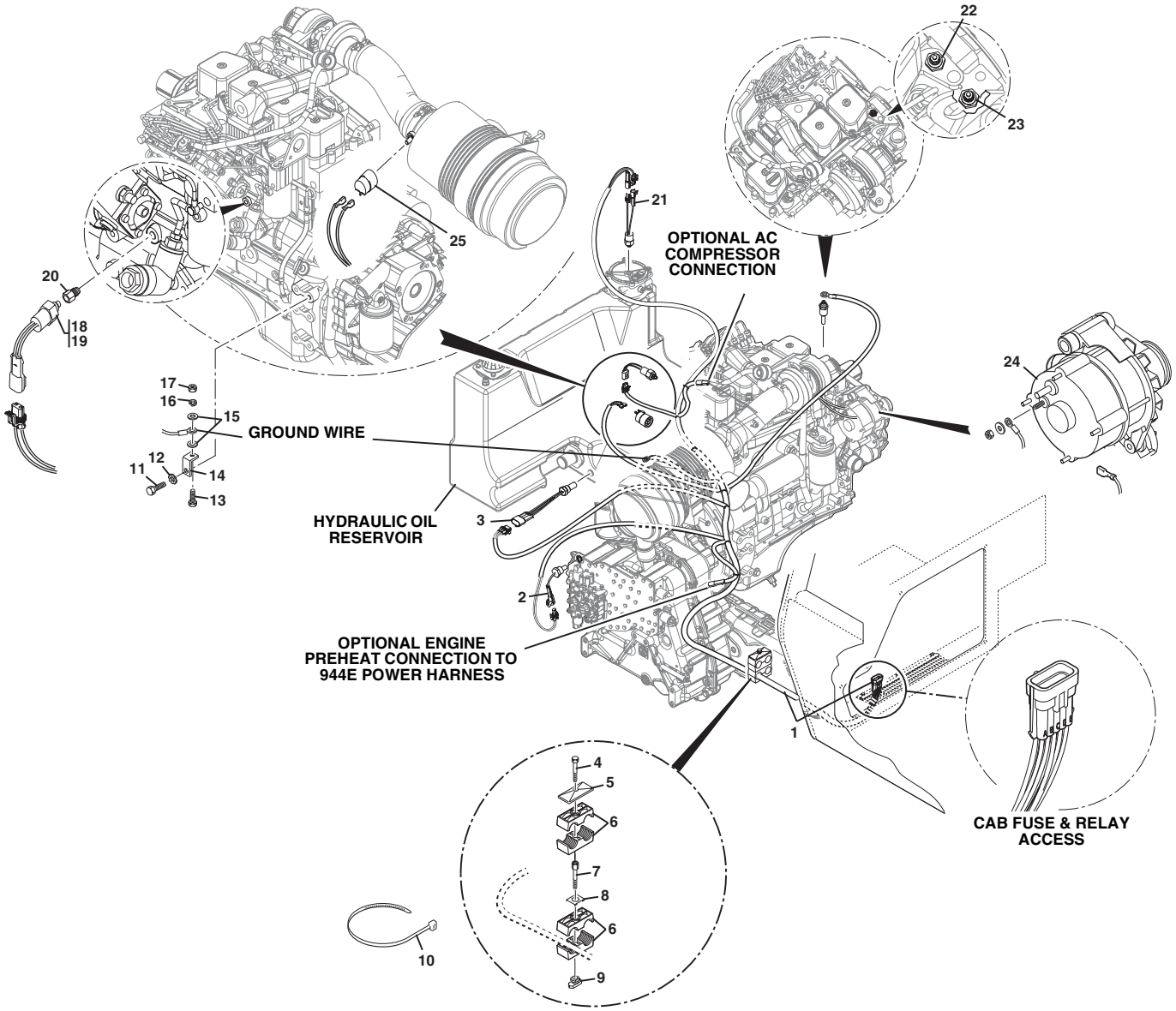

PU3201

Figure 10-6 Sensor Components

Item	Part Number	Qty.	Description	Rev.
1	7300338	1	VEHICLE SENSOR HARNESS, **(644E S/N 17569 thru 20123 & 0160002514 thru 0160012687), (944E S/N 17569 thru 20123 & 0160002514 thru 0160012684)**	I
	4923266	1	VEHICLE SENSOR HARNESS, **(644E S/N 0160012410 & After), (944E S/N 0160012745 thru 0160014857)**	
	4923361	1	VEHICLE SENSOR HARNESS, **(944E S/N 0160014891 & After)**	
2	8223232	1	TRANSMISSION TEMPERATURE SWITCH	
3	8223240	1	DUAL HYDRAULIC TEMPERATURE SWITCH	
4	8303528	1	HEX HD CAPSCREW,M8-1.25X65mm, PC8.8	
5	8750025	1	TWIN COVER PLATE	
6	8750024	2	TWIN CLAMP SET, 1.18 DIA	
7	8750039	1	METRIC BOLT STACKING	
8	8750017	1	LOCKING PLATE	
9	8750043	1	RAIL NUT, M8	
10	8584001	AR	TY-RAP	
11	8303533	1	HEX HD CAPSCREW, M12-1.75X20mm, PC8.8	
12	8310650	1	LOCKWASHER, M12, (external tooth)	
13	8303798	1	HEX HD CAPSCREW, M10-1.5X25mm, PC8.8	
14	7301529	1	BUSS BAR, 90 DEGREES	
15	8307221	2	PLAIN WASHER, M10	
16	8307023	1	LOCKWASHER, M10	
17	8305038	1	HEX NUT, M10-1.5	
18		1	ENGINE OIL PRESSURE SWITCH, **(644E S/N 17569 thru 20123 & 0160002514 thru 0160012687), (944E S/N 17569 thru 20123 & 0160002514 thru 0160012684)**, (no longer available, order pressure switch kit)	
	4360609	1	ENGINE OIL PRESSURE SWITCH, **(644E S/N 0160012410 & After), (944E S/N 0160012745 & After)**	
19	4923263	1	PRESSURE SWITCH JUMPER, **(644E S/N 0160012410 & After), (944E S/N 0160012745 & After)**	
20	77373058	1	ADAPTER, **(644E S/N 0160012410 & After), (944E S/N 0160012745 & After)**	
21	8223526	1	HYDRAULIC OIL FILTER PRESSURE SWITCH, 20 PSI	
22	8223246	1	ENGINE COOLANT TEMPERATURE SENDER, 644E	
23	8223246	1	ENGINE COOLANT TEMPERATURE SENDER, 944E	
24		Ref	ALTERNATOR, (see Figure 4-1 for details)	
25		Ref	VACUUM SWITCH, (see Figure 4-4 for details)	
	2915053	1	PRESSURE SWITCH KIT, (includes item 18, 19 & 20)	

Figure 10-7 Control Components

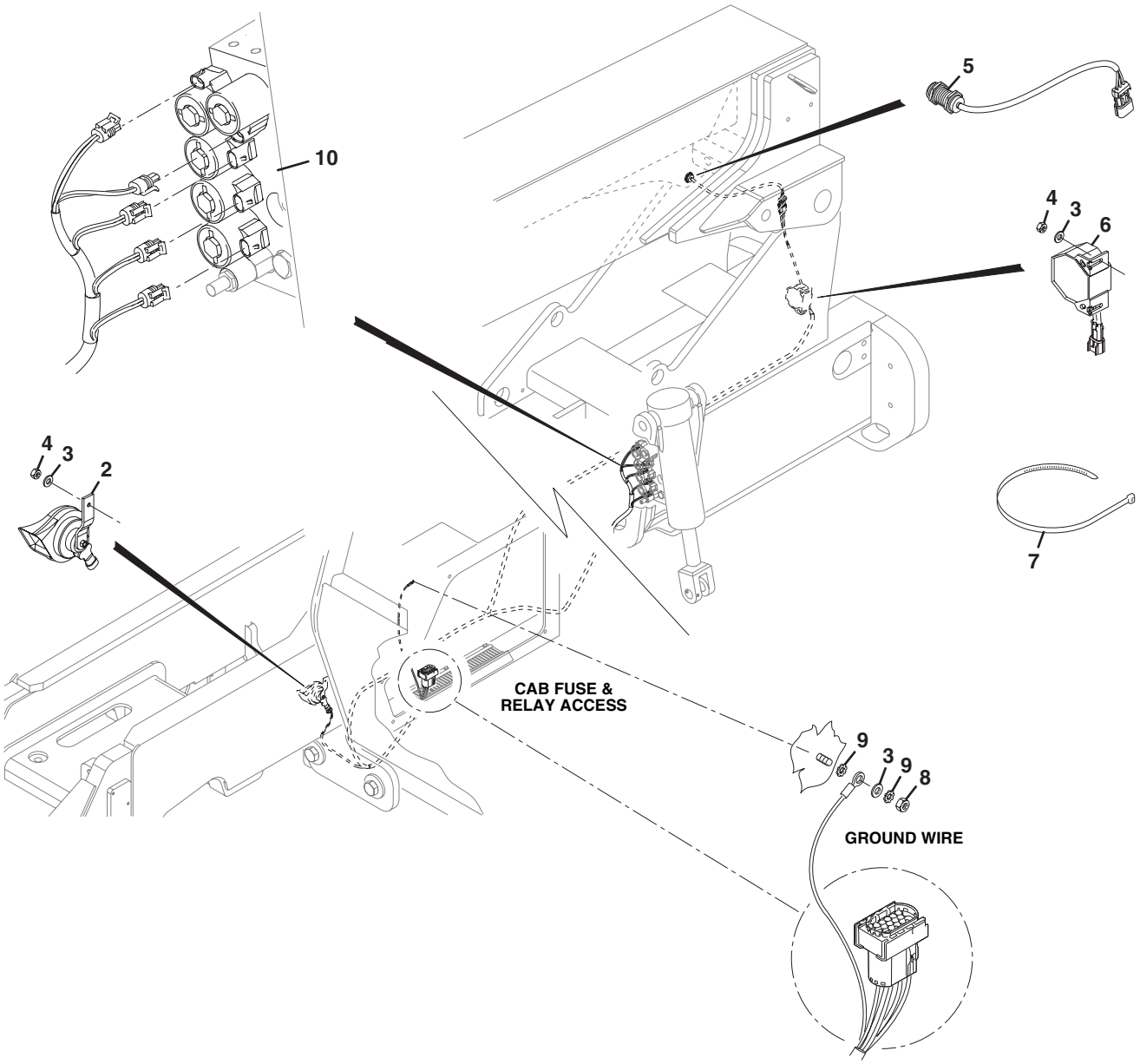

Figure 10-7 Control Components

Item	Part Number	Qty.	Description	Rev.
1	7300340	1	CONTROL HARNESS	
2	10268663	1	HORN ASSY, 12V	
3	8307219	4	PLAIN WASHER, M6	
4	8305047	3	HEX NUT, M6-1,0	
5	8223237	1	BOOM ANGLE PROXIMITY SWITCH	
6	8270621	1	BACKUP ALARM	
7	8584001	AR	TY-RAP	
8	8305652	1	HEX LOCKNUT, M6-1.0	
9	8310687	2	LOCKWASHER, M6, (external tooth)	
10		Ref	STABIL-TRAK SOLENOID VALVE, (see Figure 9-13 for details)	

Figure 10-8 Transmission Components

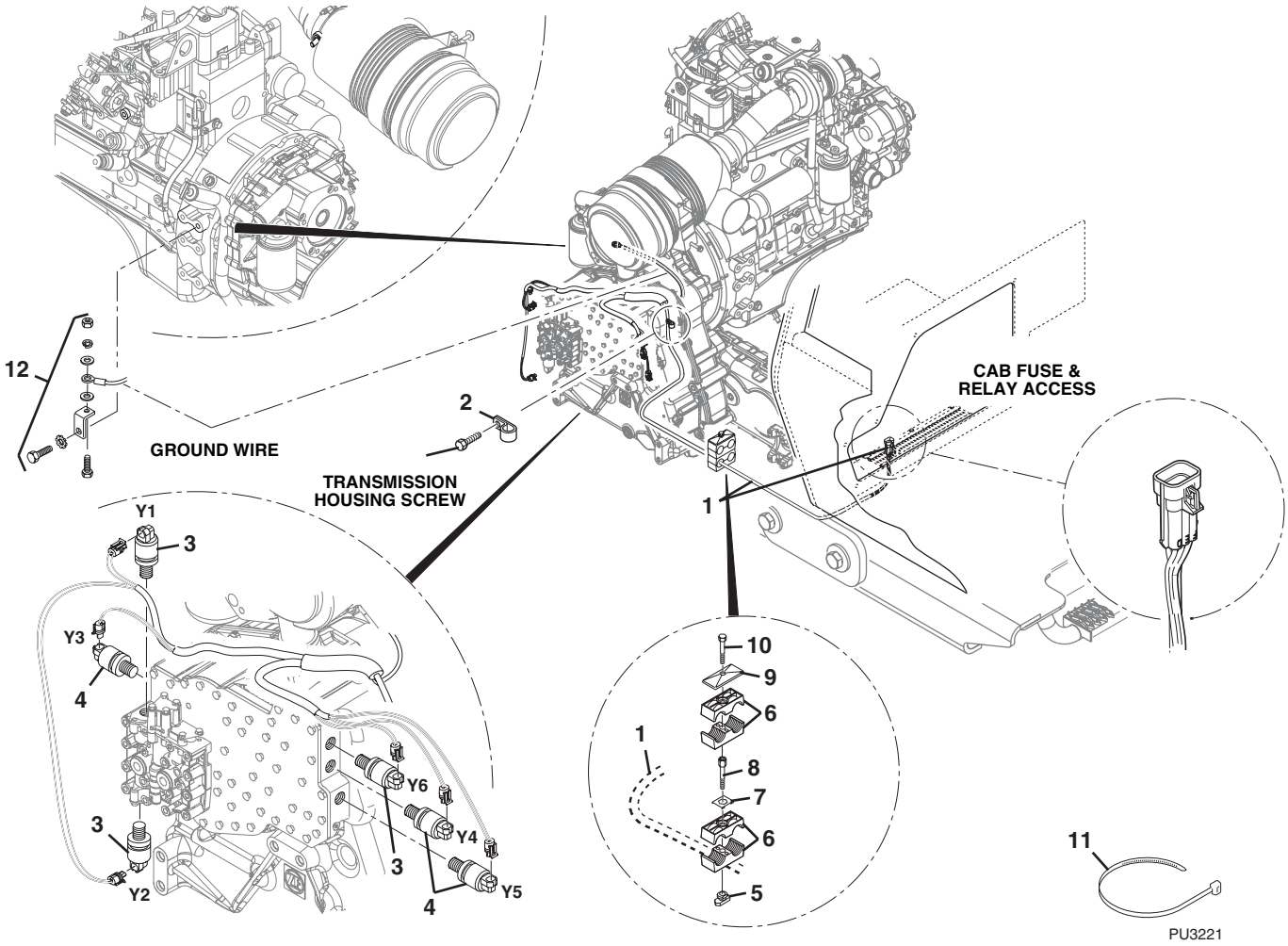

Figure 10-8 Transmission Components

Item	Part Number	Qty.	Description	Rev.
1	7300337	1	TRANSMISSION HARNESS	
2	8406105	1	TUBE CLIP, 3/4	
3	8036528	3	SOLENOID VALVE	
4	8036529	3	SOLENOID VALVE	
5	8750043	1	RAIL NUT, M8	
6	8750024	2	TWIN CLAMP SET, 1.18 DIA	
7	8750017	1	LOCKING PLATE	
8	8750039	1	BOLT STACKING	
9	8750025	1	TWIN COVER PLATE	
10	8303528	1	HEX HD CAPSCREW, M8-1.25X65mm, PC8.8	
11	8584001	AR	TY-RAP	
12		Ref	GROUND WIRE HARDWARE, (see Figure 10-6 for details)	

This Page Intentionally Left Blank

SECTION 11
DECALS

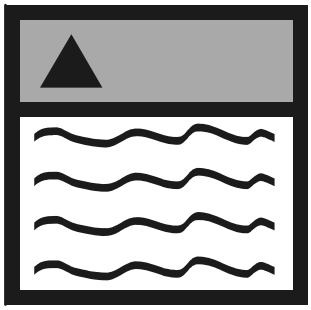

Figure 11-1 Decals

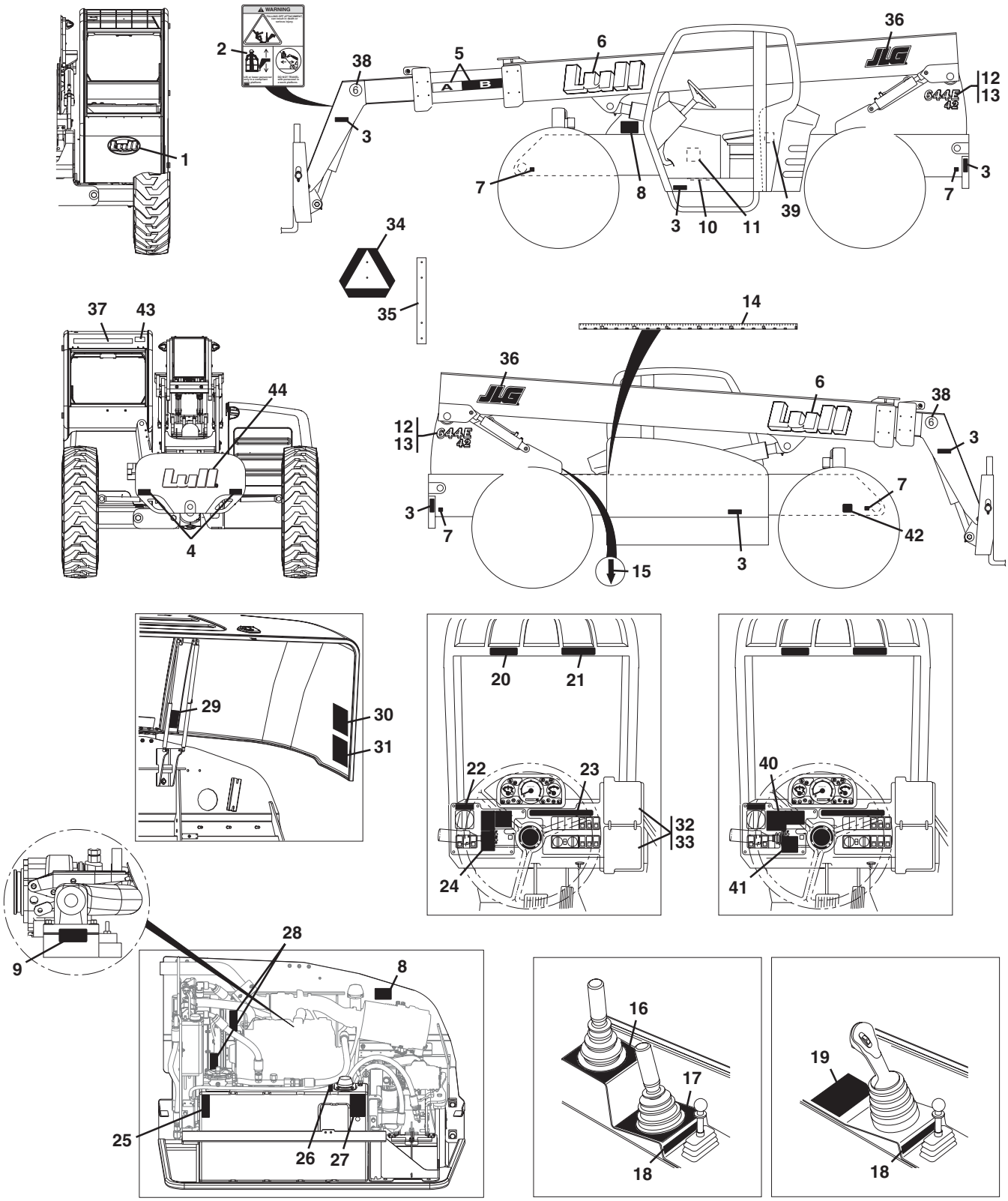

Figure 11-1 Decals

Item	Part Number	Qty.	Description	Rev.
1	4110352	1	LULL DECAL	
2	4110389	1	CARRYING PERSONNEL WARNING DECAL	
3	7301380	6	ORANGE REFLECTIVE TAPE, (4.5X2)	
4	7301379	2	RED REFLECTIVE TAPE, (4.5X2)	
5	4110130	1	BOOM EXTEND STRIPES DECAL, (A-F)	
6	1706103	2	“LULL” DECAL	
7	4109801	4	TIE DOWN POINT DECAL	
8	1706300	2	ETHER STARTING WARNING DECAL, (engines equipped w/cold start)	
9	8270427	1	GRID HEATER WARNING DECAL, (engines equipped w/cold start)	
10	4110392	1	HYDRAULIC TEST LOCATIONS DECAL	
11	1705936	1	FUSE BLOCK FUSE LOCATIONS DECAL, **(644E S/N 17569 thru 20123 & 0160002514 thru 0160034284), (944E S/N 17569 thru 20123 & 0160002514 thru 0160034278)**	
12	1706104	2	644E-42 DECAL	
13	1706105	2	944E-42 DECAL	
14	4110356	1	TRANSFER CARRIAGE EXTENSION TAPE MEASURE DECAL	
15	4110405	1	TRANSFER CARRIAGE INDICATOR POINTER DECAL	
16	4110366	1	FRONT JOYSTICK OVERLAY DECAL, (transfer & attach. tilt control)	
17	4110360	1	MIDDLE JOYSTICK OVERLAY DECAL, (boom movement control)	
18	4110367	1	REAR JOYSTICK DECAL, (frame sway control)	
19	4110423	1	SINGLE JOYSTICK DECAL	
20	4108991	1	ELECTROCUTION HAZARD DANGER DECAL	
21	4110137	1	TIPOVER HAZARD DANGER DECAL	
22	4110359	1	STEER MODE INDICATOR DECAL	
23	4110361	1	SAFETY INSTRUCTIONS DECAL	
24	4110358	1	WARNING & DANGER DECAL, **(644E S/N 17569 thru 20115 & S/N 0160002519 thru 0160007267, excluding 0160006857), (944E S/N 18554 thru 20123 & 0160002514 thru 0160007270, excluding 0160005664)**	
25	4108302	1	HYDRAULIC OIL LEVEL DECAL	
26	4100181	1	HYDRAULIC OIL FILL DECAL	
27	4110368	1	WARNING DECAL, BATTERY EXPLOSION HAZARD	
28	4110184	2	WARNING DECAL, MOVING PARTS/ENTANGLEMENT HAZARD	
29	4110390	1	HOOD LOCK RELEASE DECAL	
30	4110349	1	LUBRICATION CHART DECAL	
31	4110350	1	MAINTENANCE CHART DECAL	
32	7300628	1	LOAD CHART BOOKLET, **(644E Before S/N 0160037794)**	
	1001106010	1	LOAD CHART BOOKLET, **(644E S/N 0160037794 & After)**	
	1001110410	1	LOAD CHART BOOKLET, (contains load charts for 12’ truss boom w/winch, fork mounted lifting hook & grapple bucket), **(644E S/N 0160037794 & After)**	
33	7301586	1	LOAD CHART BOOKLET, **(944E Before S/N 0160037794)**	
	1001106011	1	LOAD CHART BOOKLET, **(944E S/N 0160037794 & After)**	
	1001110411	1	LOAD CHART BOOKLET, (contains load charts for 12’ truss boom w/winch, fork mounted lifting hook & grapple bucket), **(944E S/N 0160037794 & After)**	
34	7301495	1	SLOW MOVING VEHICLE SIGN	
35	7301383	1	SLOW MOVING VEHICLE BRACKET	
36	1706101	1	JLG DECAL	
37	1705687	1	WEBSITE DECAL	
38	1706170	2	GOOSENECK 6 DECAL, (644E-42)	
	1706168	2	GOOSENECK 9 DECAL, (944E-42)	

Figure 11-1 Decals (Continued)

Item	Part Number	Qty.	Description	Rev.
39	3251813	1	“USA” DECAL	
40	1705957	1	VEHICLE ROLLAWAY WARNING, **(644E S/N 0160007291 & After, including 0160006857), (944E S/N 0160007289 & After, including 0160005664)**	
41	1705956	1	DO NOT JUMP WARNING, **(644E S/N 0160007291 & After, including 0160006857), (944E S/N 0160007289 & After, including 0160005664)**	
42	7301166	1	S/N PLATE DECAL, (644E-42)	
	7301203	1	S/N PLATE DECAL, (944E-42)	
43	91404299	1	ESCAPE DECAL	
44	1706511	1	LULL DECAL, **(644E S/N 0160017554 & After), (944E S/N 0160017557 & After)**	
	7301384	1	SLOW MOVING VEHICLE KIT, 644E & 944E, (includes items 38 & 39 & appropriate installation hardware)	
	2915192	1	DECAL KIT, (includes items 1 thru 31 & items 36 thru 41)	
	7302187	1	UNITED RENTALS DECAL KIT	
	0274255	1	NATIONS RENT DECAL KIT	
	0274273	1	NES DECAL KIT	
	0274239	1	CUSTOMER DECAL KIT	
	0274548	1	H & E DECAL KIT	
	1001094372	1	RSC DECAL KIT	
	1001098169	1	SUNBELT DECAL KIT	

Figure 11-1 Decals (Continued)

Item	Part Number	Qty.	Description	Rev.

This Page Intentionally Left Blank

SECTION 12
OPTIONS

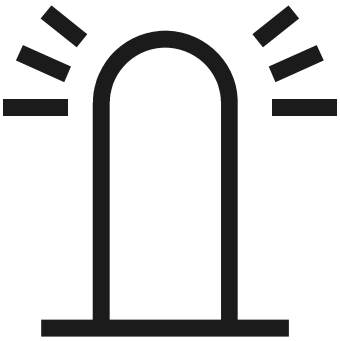

Figure 12-1 Roadlight Installation

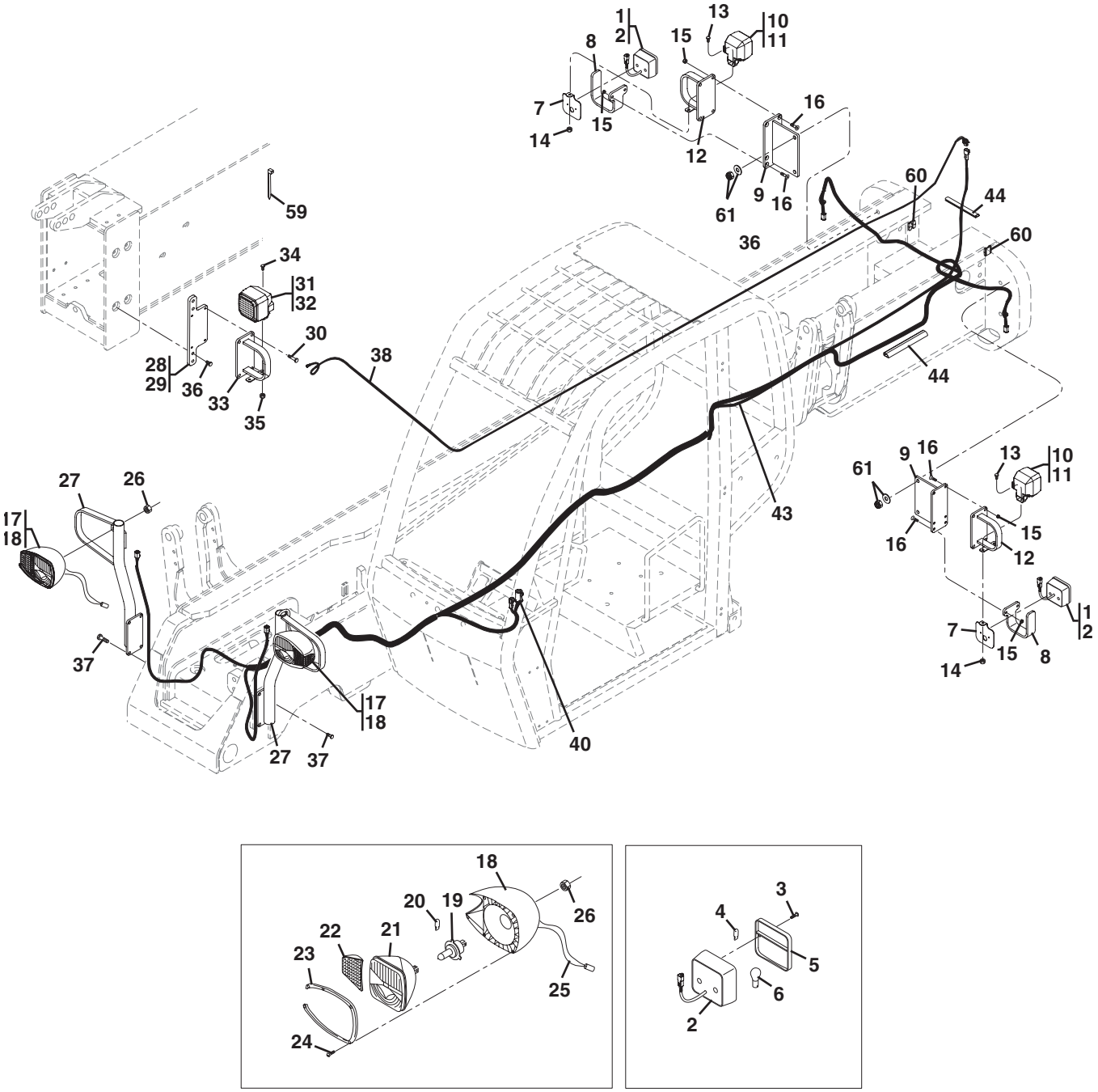

PU3241

Figure 12-1 Roadlight Installation (Continued)

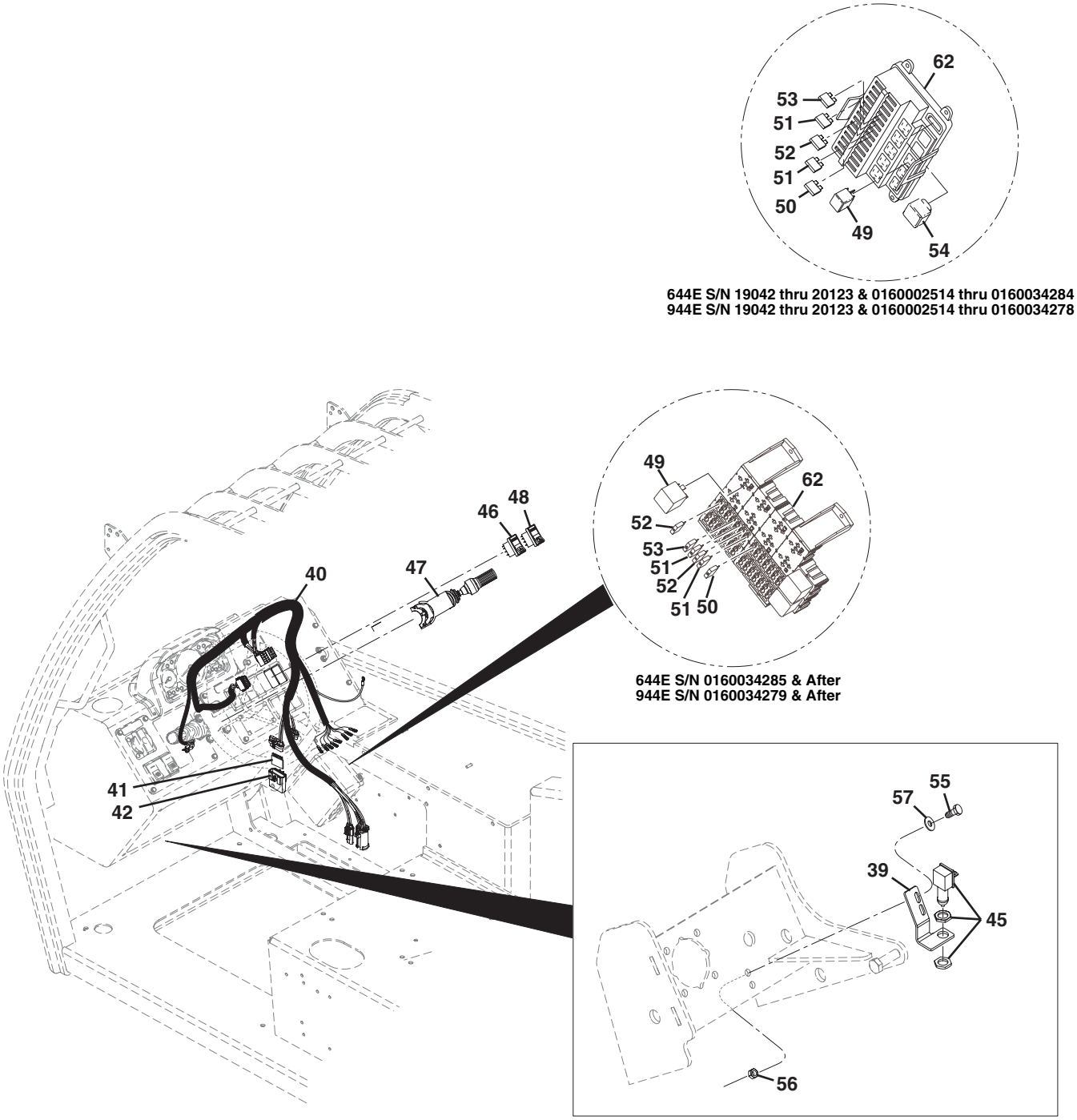

Figure 12-1 Roadlight Installation

Item	Part Number	Qty.	Description	Rev.
	7300423	1	ROADLIGHT INSTALLATION, (includes items 1 thru 60)	AA
1	7301225	1	ROADLIGHT ASSY, (left rear), (includes items 2 thru 16)	D
	7301229	1	ROADLIGHT ASSY, (right rear), (includes items 2 thru 16)	D
2	7150690	2	DIRECTION STOP/TAIL LIGHT, (includes items 3 thru 6)	
3		4	TAIL LIGHT LENS SCREW	
4	8036221	1	BLINKER BULB	
5	8036219	1	TAIL LIGHT LENS	
6	8036222	1	TAIL LIGHT BULB & BRAKE LIGHT	
7	7301230	1	TAIL LIGHT MOUNTING PLATE	
8	7301233	1	TAIL LIGHT GUARD	
9	7301238	1	REAR LIGHT BRACKET	
10	7301345	1	WORKLIGHT ASSY, (left rear), (includes items 11 thru 14)	
	7301346	1	WORKLIGHT ASSY, (right rear), (includes items 11 thru 14)	
11		1	WORKLAMP, (no longer available, order 1001096314 for replacement), **(644E S/N 19042 thru 20123 & 0160002514 thru 0160030591), (944E S/N 19042 thru 20123 & 0160002514 thru 0160030592)**	
	8036218	1	HALOGEN BULB, 12V	
		1	LENS, (no longer available, order 1001096314 for replacement)	
	8036216	4	LENS SCREW	
	1001096314	1	WORKLAMP, **(644E S/N 0160030593 & After), (944E S/N 01600030594 & After)**	
	70021859	1	LENS, (includes lens, reflective unit & gasket)	
	8036218	1	HALOGEN BULB, 12V	
12	7301341	1	WORKLIGHT BRACKET ASSY	
	7301324	1	MOUNTING PLATE	
	7301342	1	WORKLIGHT GUARD	
	7301343	1	WORKLIGHT MOUNTING BRACKET	
13	8303606	6	HEX HD CAPSCREW, M8X1.25X20MM, PC8.8	
14	8305043	6	NUT, M8X1.25	
15	8305645	6	HEX NUT, 3/8-16	
16	8310341	6	HEX HD CAPSCREW, 3/8-16X1-1/2	
17	7301318	1	ROADLIGHT ASSY INC LIGHT, (right front), (includes items 18 thru 27)	B
	7301321	1	ROADLIGHT ASSY INC LIGHT, (left front), (includes items 18 thru 27)	B
18	7150703	1	ROADLIGHT, (right front), (includes items 19 thru 26)	
	7150702	1	ROADLIGHT, (left front), (includes items 19 thru 26)	
19	8036213	1	HEADLIGHT BULB	
20	8036214	1	BLINKER BULB	
21	8036212	1	HEADLIGHT LENS	
22	8036209	1	AMBER HEADLIGHT LENS	
23		1	HEADLIGHT RING	
24	8036216	6	HEADLIGHT LENS SCREW	
25	8036215	1	WIRING HARNESS, (includes 6-way connector)	
26		1	NUT, (torque to 7-15 lb-ft)	
27	7301320	1	ROAD LIGHT BRACKET ASSY, (right front)	
	7301323	1	ROAD LIGHT BRACKET ASSY, (left front)	
	7301324	1	COMMON LIGHT MOUNTING	
	7301325	1	ROADLIGHT SUPPORT TUBING	
	7301327	1	ROADLIGHT GUARD	
	7301328	1	LIGHT MOUNT BRACKET	

Figure 12-1 Roadlight Installation (Continued)

Item	Part Number	Qty.	Description	Rev.
28	7301322	1	BOOM WORKLIGHT ASSY, (includes items 29 thru 37)	AA
29	7301319	1	BOOM WORKLIGHT BRACKET	
30	8303784	4	HEX HD CAPSCREW, M10X1.5X20MM, PC8.8	
31	7301346	1	WORKLIGHT ASSY, (right front), (includes items 32 thru 35	
32		1	WORKLAMP, (no longer available, order 1001096314 for replacement), **(644E S/N 19042 thru 20123 & 0160002514 thru 0160030591), (944E S/N 19042 thru 20123 & 0160002514 thru 0160030592)**	
	8036218	1	HALOGEN BULB, 12V	
		1	LENS, (no longer available, order 1001096314 for replacement)	
	8036216	4	LENS SCREW	
	1001096314	1	WORKLAMP, **(644E S/N 0160030593 & After), (944E S/N 01600030594 & After)**	
	70021859	1	LENS, (includes lens, reflective unit & gasket)	
	8036218	1	HALOGEN BULB, 12V	
33	7301341	1	WORKLIGHT BRACKET ASSY	
	7301324	1	MOUNTING PLATE	
	7301342	1	WORKLIGHT GUARD	
	7301343	1	WORKLIGHT MOUNTING BRACKET	
34	8303606	1	HEX HD CAPSCREW, M8X1.25X20MM, PC8.8	
35	8305043	1	NUT, M8X1.25	
36	8303769	2	HEX HD CAPSCREW, M10X1.5X25MM, PC8.8	
37	8303798	8	HEX HD CAPSCREW, M10X1.5X25MM, PC8.8	
38	7150730	1	BOOM WORKLIGHT CORD	
39	7151322	1	BRAKE LIGHT SWITCH BRACKET	
40	7300347	1	CAB ROADLIGHT HARNESS, (includes items 41 & 42), **(644E S/N 17569 thru 20123 & 0160002514 thru 0160034284), (944E S/N 17569 thru 20123 & 0160002514 thru 0160034278)**	
	1001092359	1	CAB ROADLIGHT HARNESS, (includes items 41 & 42), **(644E S/N 0160034285 & After), (944E S/N 0160034279 & After)**	
41	8220363	1	3 DIODE CIRCUIT BOARD	
42	8220357	1	CLEAR VES-PAC COVER	
43	7300348	1	VEHICLE ROADLIGHT HARNESS	
44	7301998	2	CONDUIT	
45	8223019	1	MOMENTARY SWITCH	
46	8223060	1	HAZARD SWITCH	
47	8223073	1	TURN SIGNAL CONTROL SELECTOR	
48	8223080	1	WORKLIGHT SWITCH	
49	8225119	1	SEALED RELAY, HIGH INRUSH W/RESISTOR	
50	8229233	1	FUSE, AUTOMOBILE BLADE TYPE, 7.5 AMPS	
51	8229235	2	FUSE, AUTOMOBILE BLADE TYPE, 20 AMPS	
52	8229237	A/R	FUSE, AUTOMOBILE BLADE TYPE, 15 AMPS	
53	8229238	1	FUSE, AUTOMOBILE BLADE TYPE, 40 AMPS	
54	8270628	1	ELECTRONIC FLASHER, **(644E S/N 17569 thru 20123 & 0160002514 thru 0160034284), (944E S/N 17569 thru 20123 & 0160002514 thru 0160034278)**	
55	8303607	2	HEX HD CAPSCREW, M6X1X25MM, PC8.8	
56	8305637	2	HEX LOCKNUT, M6X1	
57	8307219	2	WASHER, M6	
58	8406105	2	CLIP TUBE	
59	8584001	12	TY-RAP	
60	8584018	2	CABLE TIE MOUNT	

Figure 12-1 Roadlight Installation (Continued)

Item	Part Number	Qty.	Description	Rev.
61		Ref	BRACKET HARDWARE, (see Figure 1-1 for details)	
62		Ref	FUSE PANEL, (see Figure 10-5 for details)	

Figure 12-1 Roadlight Installation (Continued)

Item	Part Number	Qty.	Description	Rev.

Figure 12-2 Worklight Installation

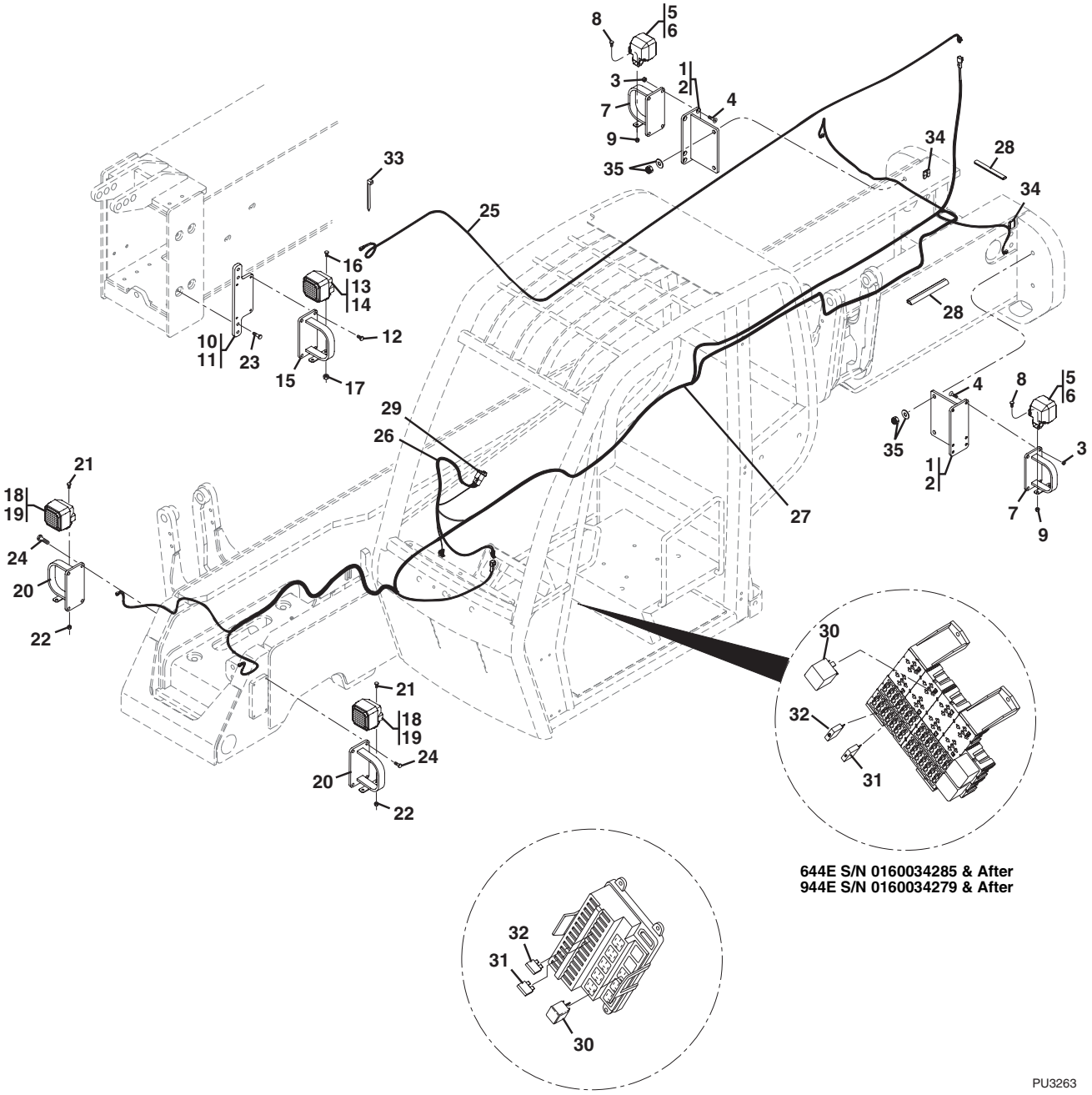

644E S/N 19042 thru 20123 & 0160002514 thru 0160034284
944E S/N 19042 thru 20123 & 0160002514 thru 0160034278

Figure 12-2 Worklight Installation

Item	Part Number	Qty.	Description	Rev.
	7300424	1	WORKLIGHT INSTALLATION, (includes items 1 thru 34)	
1	7301236	1	WORKLIGHT ASSY, (right rear), (includes 2 thru 9)	
	7301237	1	WORKLIGHT ASSY, (left rear), (includes 2 thru 9)	
2	7301238	1	REAR LIGHT BRACKET	
3	8305645	4	HEX NUT, 3/8-16	
4	8310341	4	HEX HD CAPSCREW, 3/8-16X1-1/2	
5	7301346	1	WORKLIGHT ASSY, (right rear)	
	7301345	1	WORKLIGHT ASSY, (left rear)	
6		1	WORKLAMP, (no longer available, order 1001096314 for replacement), **(644E S/N 19042 thru 20123 & 0160002514 thru 0160030591), (944E S/N 19042 thru 20123 & 0160002514 thru 0160030592)**	
	8036218	1	HALOGEN BULB, 12V	
		1	LENS, (no longer available, order 1001096314 for replacement)	
	8036216	4	LENS SCREW	
	1001096314	1	WORKLAMP, **(644E S/N 0160030593 & After), (944E S/N 01600030594 & After)**	
	70021859	1	LENS, (includes lens, reflective unit & gasket)	
	8036218	1	HALOGEN BULB, 12V	
7	7301341	1	WORKLIGHT BRACKET ASSY	
	7301324	1	MOUNTING PLATE	
	7301342	1	WORKLIGHT GUARD	
	7301343	1	WORKLIGHT MOUNTING BRACKET	
8	8303606	1	HEX HD CAPSCREW, M8X1.25X20MM, PC8.8	
9	8305043	1	NUT, M8X1.25	
10	7301322	1	BOOM WORKLIGHT ASSY, (includes 11 thru 17)	
11	7301319	1	BOOM WORKLIGHT BRACKET	
12	8303784	4	HEX HD CAPSCREW, M10X1.5X20MM, PC8.8	
13	7301346	1	WORKLIGHT ASSY, (right front)	
14		1	WORKLAMP, (no longer available, order 1001096314 for replacement), **(644E S/N 19042 thru 20123 & 0160002514 thru 0160030591), (944E S/N 19042 thru 20123 & 0160002514 thru 0160030592)**	
	8036218	1	HALOGEN BULB, 12V	
		1	LENS, (no longer available, order 1001096314 for replacement)	
	8036216	4	LENS SCREW	
	1001096314	1	WORKLAMP, **(644E S/N 0160030593 & After), (944E S/N 01600030594 & After)**	
	70021859	1	LENS, (includes lens, reflective unit & gasket)	
	8036218	1	HALOGEN BULB, 12V	
15	7301341	1	WORKLIGHT BRACKET ASSY	
	7301324	1	MOUNTING PLATE	
	7301342	1	WORKLIGHT GUARD	
	7301343	1	WORKLIGHT MOUNTING BRACKET	
16	8303606	1	HEX HD CAPSCREW, M8X1.25X20MM, PC8.8	
17	8305043	1	NUT, M8X1.25	
18	7301345	1	WORKLIGHT ASSY, (left front), (includes 19 thru 22)	
	7301346	1	WORKLIGHT ASSY, (right front), (includes 19 thru 22)	
19		1	WORKLAMP, (no longer available, order 1001096314 for replacement), **(644E S/N 19042 thru 20123 & 0160002514 thru 0160030591), (944E S/N 19042 thru 20123 & 0160002514 thru 0160030592)**	
	8036218	1	HALOGEN BULB, 12V	

Figure 12-2 Worklight Installation (Continued)

Item	Part Number	Qty.	Description	Rev.
		1	LENS, (no longer available, order 1001096314 for replacement)	
	8036216	4	LENS SCREW	
	1001096314	1	WORKLAMP, **(644E S/N 0160030593 & After), (944E S/N 01600030594 & After)**	
	70021859	1	LENS, (includes lens, reflective unit & gasket)	
	8036218	1	HALOGEN BULB, 12V	
20	7301341	1	WORKLIGHT BRACKET ASSY	
	7301324	1	MOUNTING PLATE	
	7301342	1	WORKLIGHT GUARD	
	7301343	1	WORKLIGHT MOUNTING BRACKET	
21	8303606	1	HEX HD CAPSCREW, M8X1.25X20MM, PC8.8	
22	8305043	1	NUT, M8X1.25	
23	8303769	2	HEX HD CAPSCREW, M10X1.5X45MM, PC8.8	
24	8303798	8	HEX HD CAPSCREW, M10X1.5X25MM, PC8.8	
25	7150730	1	BOOM WORKLIGHT HARNESS	
26	7300349	1	CAB WORKLIGHT HARNESS	
27	7300350	1	VEHICLE WORKLIGHT HARNESS	
28	7301998	2	SPLIT CONDUIT	
29	8223080	1	WORKLIGHT SWITCH	
30	8225119	1	SEALED RELAY, HIGH INRUSH W/RESISTOR	
31	8229236	1	FUSE, AUTOMOBILE BLADE TYPE, 30 AMPS	
32	8229238	1	FUSE, AUTOMOBILE BLADE TYPE, 40 AMPS	
33	8584001	12	TY-RAP	
34	8584018	2	CABLE TIE MOUNT	
35		Ref	BRACKET HARDWARE, (see Figure 1-1 for details)	

Figure 12-2 Worklight Installation (Continued)

Item	Part Number	Qty.	Description	Rev.

Figure 12-3 Beacon & Strobe Light

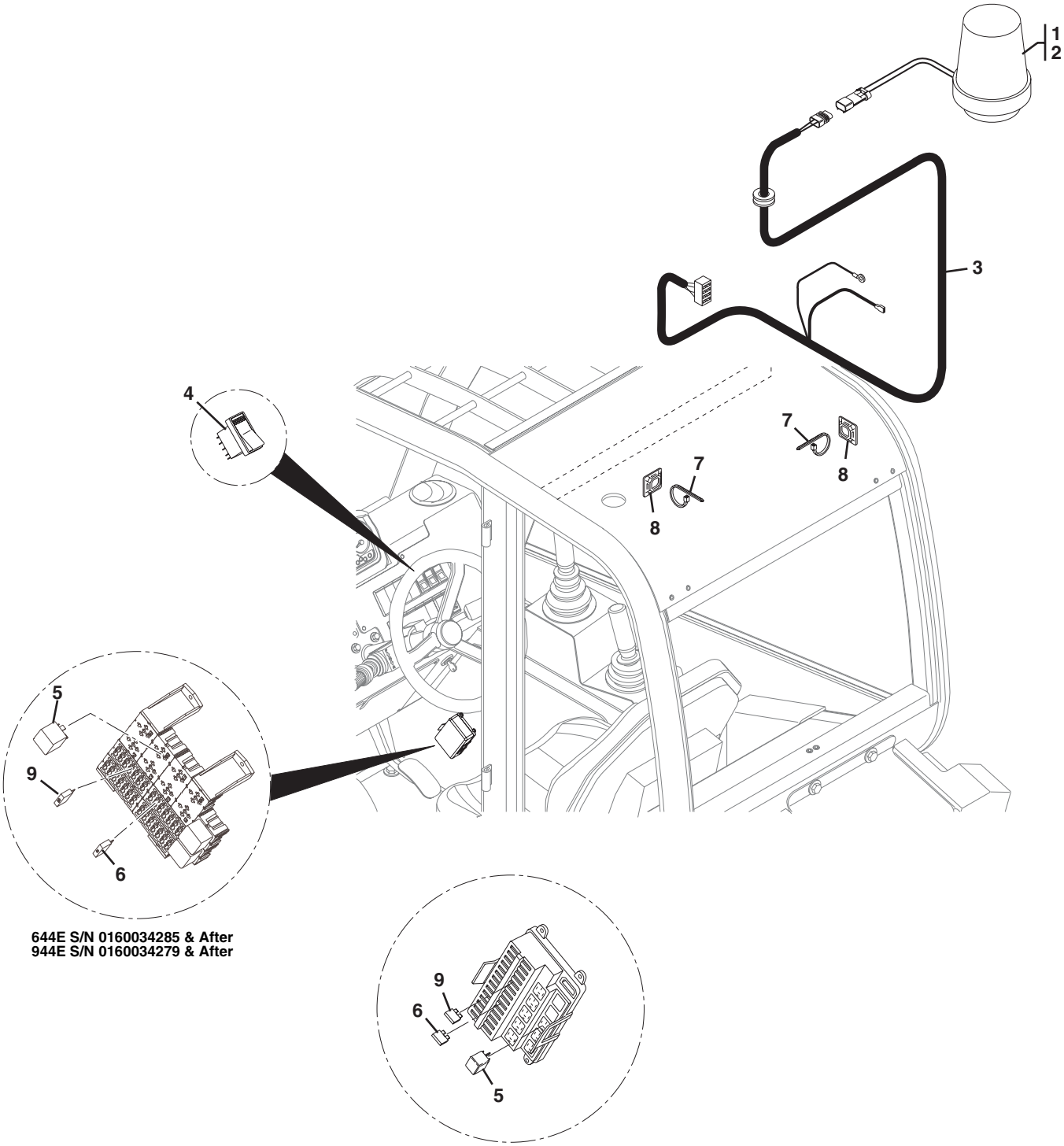

Figure 12-3 Beacon & Strobe Light

Item	Part Number	Qty.	Description	Rev.
1	8500066	1	ROTATING BEACON LIGHT	
2	8500061	1	STROBE BEACON LIGHT	
	7016603	1	BULB	
3	7300351	1	BEACON/STROBE LIGHT HARNESS, **(644E S/N 17569 thru 20123 & 0160002514 thru 0160034284), (944E S/N 17569 thru 20123 & 0160002514 thru 0160034278)**	
	1001092358	1	BEACON/STROBE LIGHT HARNESS, **(644E S/N 0160034285 & After), (944E S/N 0160034279 & After)**	
4	8223038	1	BEACON SWITCH	
5	8225119	1	HIGH INRUSH w/RESISTOR RELAY SEALED	
6	8229234	1	10 AMP FUSE	
7	8584001	12	TY-RAP	
8	8584018	7	TY-RAP MOUNT	
9	8229238	1	40 AMP FUSE	

Figure 12-4 Swing Carriage Cylinder Assembly

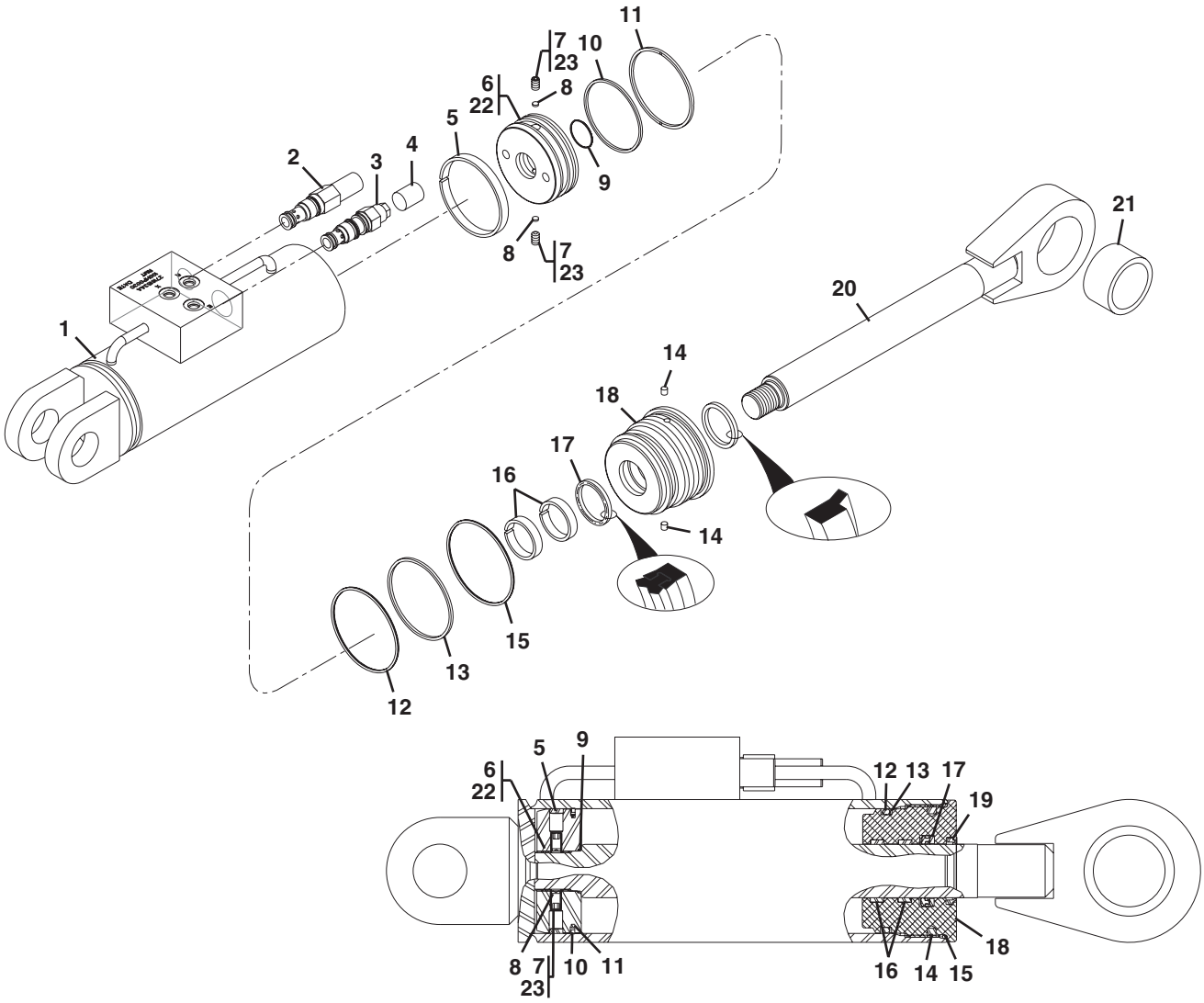

Figure 12-4 Swing Carriage Cylinder Assembly

Item	Part Number	Qty.	Description	Rev.
	2716153	1	SWING CARRIAGE CYLINDER, (includes items 1 thru 21)	
1		1	WELDMENT TUBE	
2	70020428	1	RELIEF VALVE CARTRIDGE, (torque to 30-35 lb-ft)	
	7024574	1	SEAL KIT	
3	8033786	1	COUNTERBALANCE VALVE, (torque to 30-35 lb-ft)	
	8025655	1	SEAL KIT	
4		1	CAP	
5		1	PRECISION WEARBAND	
6	8035863	1	PISTON, (loctite & torque to 440-500 lb-ft)	
7	8035536	2	SET SCREW, 5/16-18X.5, (loctite & torque to 85-95 lb-in)	
8		2	LOCKING INSERT	
9		1	O-RING	
10		1	SQUARE RING	
11		1	SQUARE SECTION TFE PISTON SEAL	
12		1	O-RING	
13		1	BACK-UP RING	
14		2	LOCKING INSERT	
15		1	O-RING	
16		2	PRECISION WEARBAND	
17		1	DEEP Z-SEAL	
18	8035862	1	HEAD GLAND, (torque to 250-300 lb-ft)	
19		1	WIPER SEAL	
20	8035861	1	WELDMENT ROD	
21	8065062	1	DURALON JOURNAL BEARING	
22	8526011	AR	LOCTITE, #271, (apply to item 6)	
23	8526036	AR	LOCTITE, #242, (apply to item 7)	
	8035830	1	SEAL KIT, (includes items 5, 8 thru 17 & 19)	

Figure 12-4 Swing Carriage Cylinder Assembly

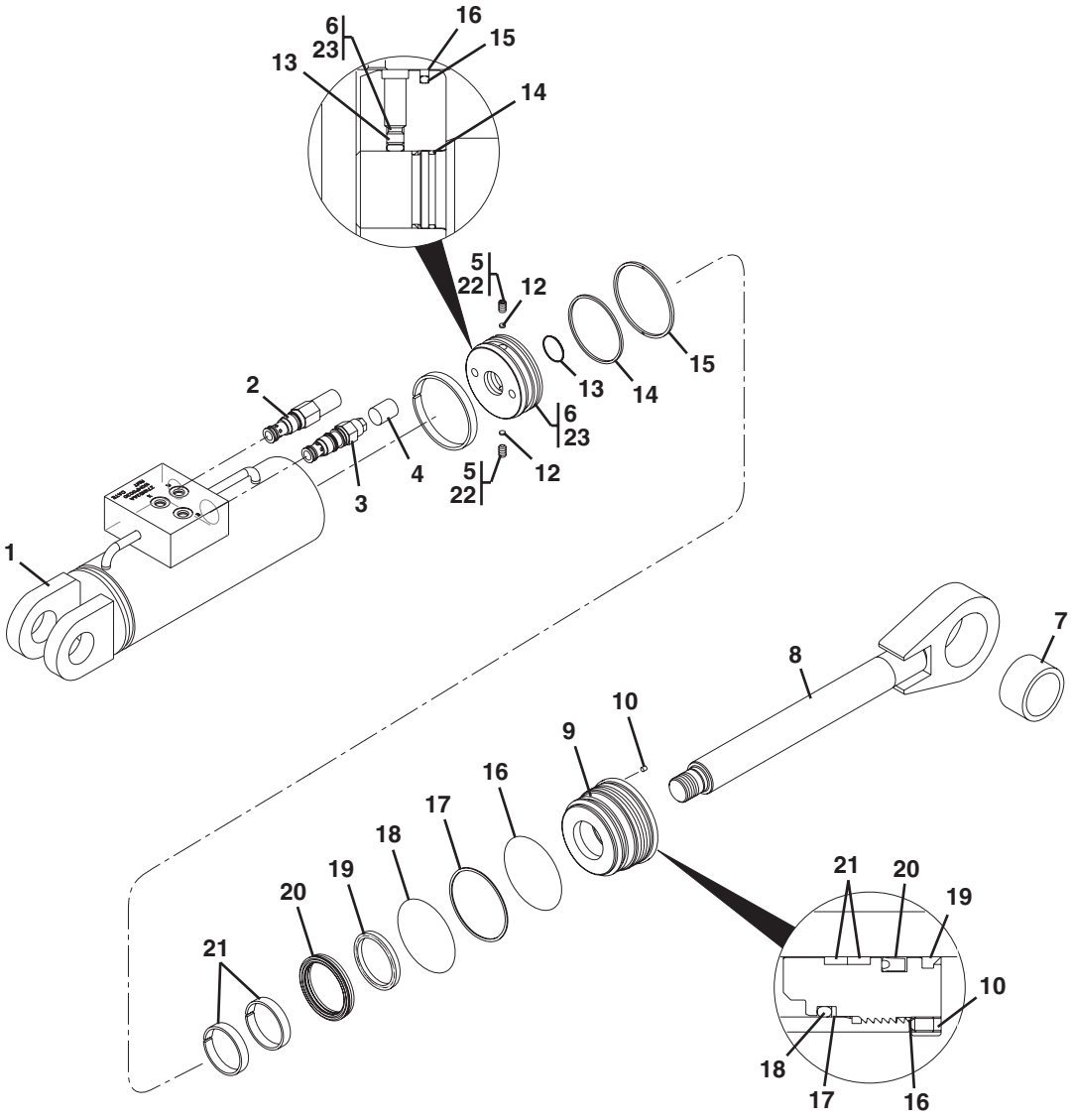

Figure 12-4 Swing Carriage Cylinder Assembly

Item	Part Number	Qty.	Description	Rev.
	2717200	1	SWING CARRIAGE CYLINDER, (includes items 1 thru 21), (was p/n 2177076 & 1684436)	
1		1	WELDMENT TUBE	
2	70020428	1	RELIEF VALVE CARTRIDGE, (torque to 30-35 lb-ft)	
	7024574		SEAL KIT	
3	8033786	1	COUNTERBALANCE VALVE, (torque to 30-35 lb-ft)	
	8025655		SEAL KIT	
4		1	CAP	
5	8036817	2	SET SCREW, 1/2-20X1/4, (loctite & torque to 85-95 lb-in)	
6	8036819	1	PISTON, (loctite & torque to 425-500 lb-ft)	
7	8036830	2	DURALON JOURNAL BEARING	
8	8036820	1	WELDMENT ROD	
9	8036821	1	HEAD GLAND, (torque to 250-300 lb-ft)	
10	8036811	1	SET SCREW, 1/2-20X1/4	
11		1	PRECISION WEARBAND	
12		2	NYLON BALL	
13		1	O-RING	
14		1	O-RING	
15		1	PISTON SEAL	
16		1	O-RING	
17		1	BACK UP RING	
18		1	O-RING	
19		1	WIPER SEAL	
20		1	Z-SEAL	
21		2	PRECISION WEARBAND	
22	8526007	AR	LOCTITE, #242, (apply to items 5)	
23	8526011	AR	LOCTITE, #271, (apply to item 6)	
	8036783		SEAL KIT, (includes items 11 thru 21)	

Figure 12-5 48”, 50”, 60” & 72” Side Tilt Carriage Cylinder

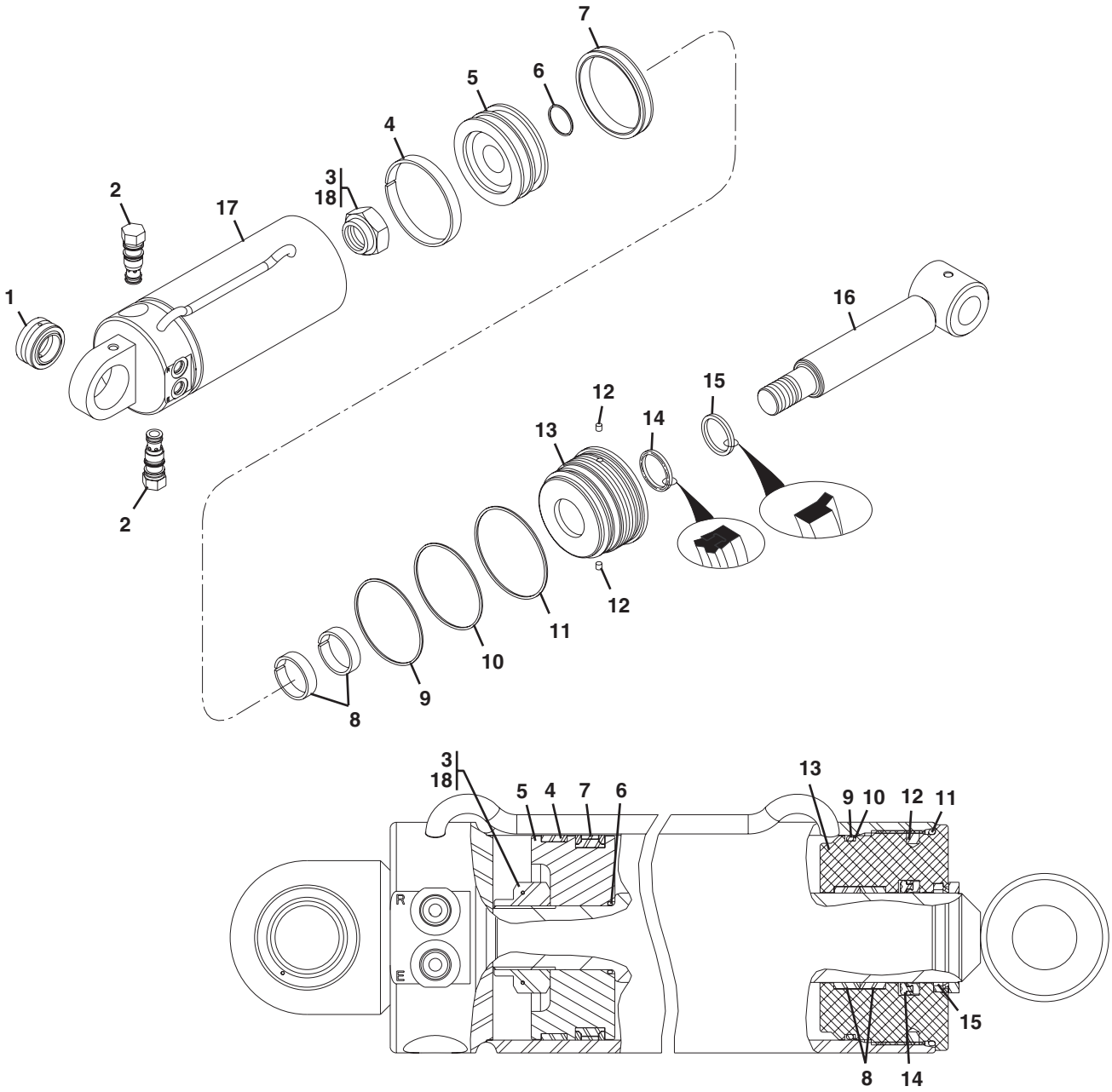

PU2950

Figure 12-5 48”, 50”, 60” & 72” Side Tilt Carriage Cylinder

Item	Part Number	Qty.	Description	Rev.
	2716143	1	48”, 50”, 60” & 72” SIDE TILT CARRIAGE CYLINDER, (includes items 1 thru 17)	
1	8036451	1	SPHERICAL BEARING	
2	8036750	2	CHECK VALVE, (torque to 30-35 lb-ft)	
	2900770	1	SEAL KIT	
3	8035865	1	LOCKNUT, (loctite & torque to 550-650 lb-ft)	
4		1	PRECISION WEARBAND	
5	8035868	1	PISTON	
6		1	O-RING	
7		1	CAPPED T-SEAL	
8		2	PRECISION WEARBAND	
9		1	O-RING	
10		1	BACK-UP RING	
11		1	O-RING	
12		2	LOCKING INSERT	
13	8035867	1	HEAD GLAND, (torque to 300-400 lb-ft)	
14		1	DEEP Z-SEAL	
15		1	WIPER SEAL	
16	8035866	1	WELDMENT ROD	
17		1	WELDMENT TUBE	
18	8526011	AR	LOCTITE, (apply to item 3)	
	8035831	1	SEAL KIT, (includes items 4, 6 thru 12, 14 & 15)	

Figure 12-6 Cold Start Option

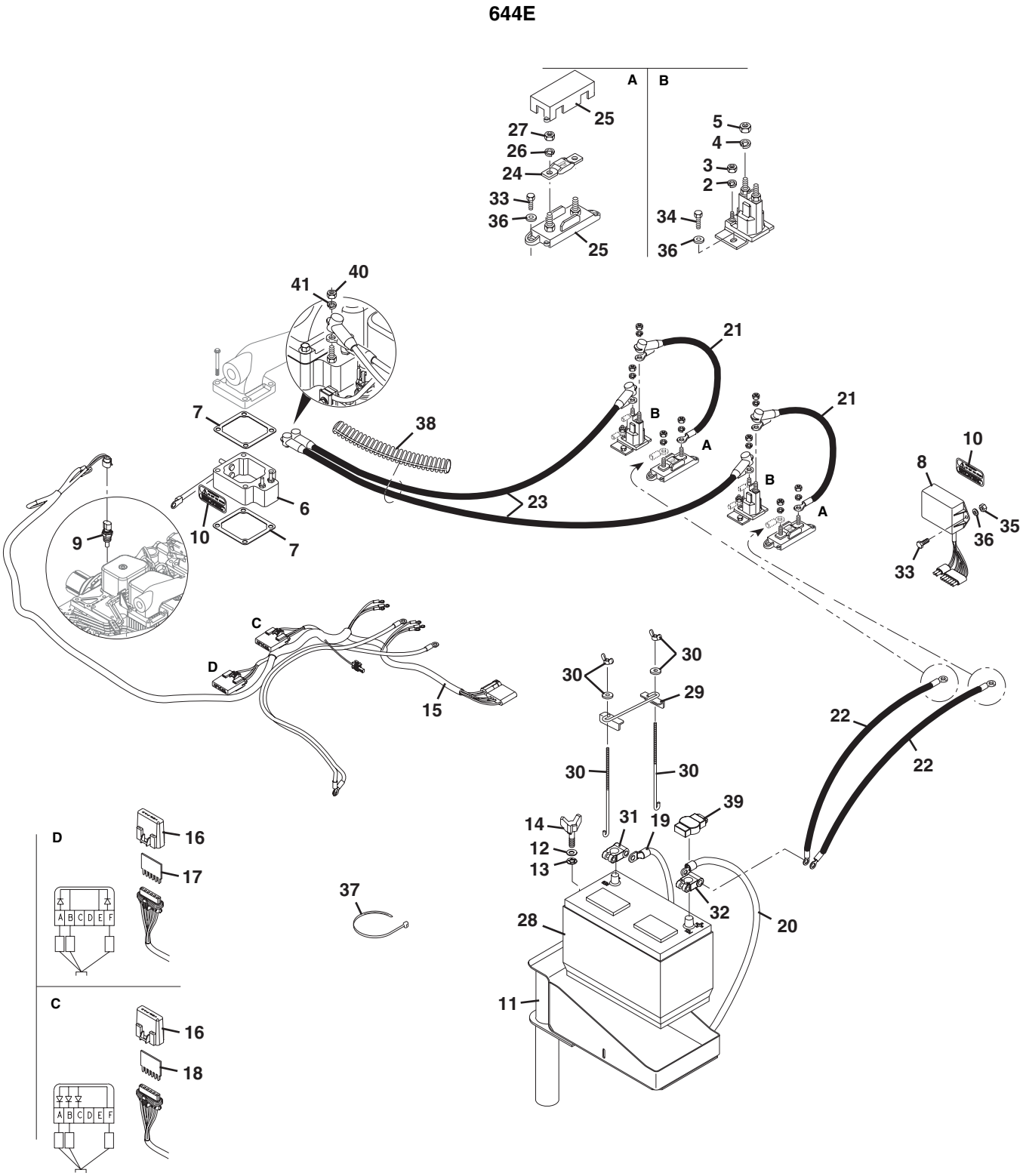

Figure 12-6 Cold Start Option

Item	Part Number	Qty.	Description	Rev.
1	8225122	2	4 POST RELAY, (includes items 2 thru 5)	
2	8307003	2	LOCKWASHER, #10	
3	8305003	2	HEX NUT, #10-32	
4		2	LOCKWASHER, 5/16	
5		2	HEX NUT, 5/16-24	
6	8270423	1	INTAKE AIR HEATER, 12 VDC, 195 AMP	
7	8270424	2	GRID HEATER GASKET	
8	8270425	1	HEATER CONTROL MODULE	
9	8270426	1	GRID HEATER CONTROL TEMPERATURE SENSOR	
10	8270427	2	GRID HEATER DECAL	
11	7300535	1	UPPER BATTERY SUPPORT	
12	8307221	1	FLAT WASHER, M10	
13	8310070	1	PUSHNUT, 3/8X13/16O.D.	
14	8310709	1	CLAMP KNOB STUD, M10-1.5X40mm	
15	7300346	1	COLD START HARNESS, (includes items 16 thru 18)	
16	8220357	2	CLEAR VES-PAC COVER	
17	8220364	1	2 DIODE CIRCUIT BOARD	
18	8220366	1	3 DIODE CIRCUIT BOARD	
19	7301523	1	NEGATIVE BATTERY CABLE,	
20	7300433	1	POSITIVE BATTERY CABLE	
21	7301448	2	GRID HEATER CABLE, FUSE TO RELAY	
22	7301449	2	GRID HEATER CABLE, BATTERY TO FUSE	
23	7301450	2	GRID HEATER CABLE, RELAY TO GRID HEATER	
24	8229259	2	MEGA BOLT FUSE, 125 AMP	
25	8229260	2	FUSE HOLDER, (includes items 26 & 27)	
26		2	LOCKWASHER, M8	
27		2	HEX NUT, M8	
28	8270144	1	12 VOLT BATTERY, GROUP 27, 850 CCA	
29	8270145	1	BATTERY HOLD DOWN BRACKET ASSY	
30	8270146	2	BATTERY HOLD DOWN BOLT ASSY	
31	8270147	1	NEGATIVE BATTERY CLAMP	
32	8270148	1	POSITIVE BATTERY CLAMP	
33	8303544	6	HEX HD CAPSCREW, M6-1.0X20mm, PC8.8	
34	8303545	4	HEX HD CAPSCREW, M6-1.0X14mm, PC8.8	
35	8305652	2	LOCK HEX NUT, M6-1.0	
36	8307219	10	FLAT WASHER, M6	
37	8584001	12	TY-RAP	
38	7125861	1	CONDUIT, .75IDX60 LG, (cut to fit)	
39	7301893	1	BATTERY TERMINAL INSULATOR	
40	8305047	2	HEX LOCKNUT, M6-1.0	
41	8310687	2	LOCKWASHER, M6, (external tooth)	
	8270422	1	GRID HEATER KIT, (includes items 1 thru 10)	

This Page Intentionally Left Blank

The following list will service fleets of machines (built to current production per date on the front cover) with repair parts which can be installed in the field. Parts from the list should be replaced when inventory is depleted to keep service parts stock supplied. For further information, contact your JLG dealer or the JLG Industries Parts Department.

Part Number	Description	Qty./Machine
	Boom Assembly	
2717175	Tilt Cylinder Hose, (see Figure 8-4)	2
2717176	Auxiliary Hose, (see Figure 8-4)	1
7300034	Wear Pad, (see Section 2)	8
7300032	Wear Pad, (see Section 2)	22
7126172	Shim, 3.42mm, (see Section 2)	AR
7126182	Shim, 1.90mm, (see Section 2)	AR
7300517	Shim, 3.42mm, (see Section 2)	AR
7300518	Shim, 1.90mm, (see Section 2)	AR
7300034	Spacer, (see Section 2)	6
7300516	Spacer, (see Section 2)	4
7300973	Spacer, (see Section 2)	4
7118892	Quick Attach Pin, (see Figure 2-4)	1
	Engine	
8024038	Engine Filter Kit, **644E Tier I**, 250 Hour, (see Figure 4-1)	1
8024037	Engine Filter Kit, **644E Tier I**, 1000 Hour, (see Figure 4-1)	1
2915034	Engine Filter Kit, **644E Tier II**, 250 Hour, (see Figure 4-1)	1
2915035	Engine Filter Kit, **644E Tier II**, 1000 Hour, (see Figure 4-1)	1
8024043	Engine Filter Kit, **944E**, 250 Hour, (see Figure 4-1)	1
8024044	Engine Filter Kit, **944E**, 1000 Hour, (see Figure 4-1)	1
6623749	Non-locking Fuel Cap, (see Figure 4-2), **(644E S/N 17569 thru 20123 & 0160002514 thru 0160015420), (944E S/N 17569 thru 20123 & 0160002514 thru 0160015417)**	1
1001093641	Non-locking Fuel Cap, (see Figure 4-2), **(644E S/N 0160015439 & After), (944E S/N 0160015442 & After)**	1
1001080707	Lockable Fuel Cap, **(644E S/N 0160015439 & After), (944E S/N 0160015442 & After)**	
8272031	Fan, (see Figure 4-1)	1
8036605	Fan Belt, (see Figure 4-1)	1
7028783	Fan Spacer, (see Figure 4-1)	1
	Drive Train	
8223072	Selector Transmission Control, (see Figure 10-3)	1
8160102	Throttle Cable, (see Figure 7-2), **(644E S/N 17569 thru 20115 & 0160002519 thru 0160003672 excluding 19557 & 0160003489)**	1
8160103	Throttle Cable, (see Figure 7-2), **(644E S/N 0160003690 & After including 19557, 20118 & 0160003489)**	1
1319726	Transmission Filter, (see Figure 5-27)	1
1319433	Wheel End Bushing, (see Section 5)	4
7027211	Wheel End Seal, (see Section 5)	4
80304173	Wheel End Hub, (see Section 5)	4
1319472	Wheel Hub Bearing, (see Section 5)	8
1319470	Front Axle Wheel Hub O-Ring, (see Section 5)	2
1319470	Rear Axle Wheel Hub O-Ring, **644E**, (see Section 5)	2
1321155	Rear Axle Wheel Hub O-Ring, **944E**, (see Section 5)	2
8841322	Oil Dipstick, (see Figure 5-27)	1

RECOMMENDED SPARE PARTS

The following list will service fleets of machines (built to current production per date on the front cover) with repair parts which can be installed in the field. Parts from the list should be replaced when inventory is depleted to keep service parts stock supplied. For further information, contact your JLG dealer or the JLG Industries Parts Department.

Part Number	Description	Qty./Machine
	Hydraulic System	
8902335	Boom Joystick Assy, (see Figure 7-6)	1
	Boom Joystick Handle Assy, (see Figure 7-6)	1
8036475	Extend/Retract Cylinder Seal Kit, **644E**, (see Figure 9-1)	1
8036328	Extend/Retract Cylinder Seal Kit, **(944E S/N 18554 thru 0160005595)**, (see Figure 9-1)	1
70020310	Extend/Retract Cylinder Seal Kit, **(944E S/N 0160005613 & After)**, (see Figure 9-1)	1
8036474	Lift Cylinder Seal Kit, **644E**, (see Figure 9-2)	1
8036644	Lift Cylinder Seal Kit, **944E**, (see Figure 9-2)	1
8035326	Attachment Tilt Cylinder Seal Kit, **644E**, (see Figure 9-3)	1
8036547	Attachment Tilt Cylinder Seal Kit, **944E**, (see Figure 9-3)	1
8036477	Frame/Sway Cylinder Seal Kit, **644E**, (see Figure 9-4)	1
8036543	Frame/Sway Cylinder Seal Kit, **944E**, (see Figure 9-4), **(S/N 17569 thru 0160004771)**	1
8036477	Frame/Sway Cylinder Seal Kit, **944E**, (see Figure 9-4), **(S/N 0160004794 & After)**	1
8036477	Stabil-Trak Cylinder Seal Kit, **644E**, (see Figure 9-5)	1
8036550	Stabil-Trak Cylinder Seal Kit, **944E**, (see Figure 9-5), **(S/N 17569 thru 0160004849)**	1
8036477	Stabil-Trak Cylinder Seal Kit, **944E**, (see Figure 9-5), **(S/N 0160004927 & After)**	1
8035332	Slave Cylinder Seal Kit, **644E**, (see Figure 9-6)	1
8036551	Slave Cylinder Seal Kit, **944E**, (see Figure 9-6)	1
8036476	Transfer Cylinder Seal Kit, (see Figure 9-7)	1
8035830	Swing Carriage (Rosenboom) Cylinder Seal Kit, (see Figure 12-4)	1
8036783	Swing Carriage (Energy) Cylinder Seal Kit, (see Figure 12-4)	1
8035831	Tilt Carriage Cylinder Seal Kit, (see Figure 12-5)	1
8320053	Hydraulic Filter Element, (see Figure 9-17)	1
7138740	Tank Strainer, (see Figure 9-17)	1
7300479	Filler/Breather Cap, (see Figure 9-17)	1
91563136	Fluid Level Sight Gauge, (see Figure 9-17)	1
	Electrical	
8223246	Engine Coolant Temperature Sender, **644E**, (see Figure 10-6)	1
8223246	Engine Coolant Temperature Sender, **644E**, (see Figure 10-6)	1
7301076	Fuel Level Sender, (see Figure 4-2)	1
8270621	Backup Alarm, (see Figure 10-7)	1
1101202	Ignition Switch, (see Figure 10-3)	1
7029525	Alternator, (Before S/N 0160014889 refer to Figure 4-1)	1
8270428	Starter, (see Figure 4-1)	1
10268663	Horn, (see Figure 10-7)	1
	Misc.	
8342813	Hood Latch Key, (see Figure 1-2)	1
8342808	Door Key, (see Figure 6-4)	1
1101203	Ignition Key, (see Figure 10-3)	1
80904003	Hydraulic Test Kit	1
8990459	Owner/Operator Manual, **(644E S/N 17569 thru 0160003877)**	1
3120038	Owner/Operator Manual, **(644E S/N 0160003878 & After)**	1
8990496	Owner/Operator Manual, **(944E S/N 18554 thru 0160003881)**	1

RECOMMENDED SPARE PARTS

The following list will service fleets of machines (built to current production per date on the front cover) with repair parts which can be installed in the field. Parts from the list should be replaced when inventory is depleted to keep service parts stock supplied. For further information, contact your JLG dealer or the JLG Industries Parts Department.

Part Number	Description	Qty./Machine
3120039	Owner/Operator Manual, **(944E S/N 0160003882 & After)**	1
8990461	Service Manual	1
8990462	Parts Manual	1

RECOMMENDED SPARE PARTS

The following list will service fleets of machines (built to current production per date on the front cover) with repair parts which can be installed in the field. Parts from the list should be replaced when inventory is depleted to keep service parts stock supplied. For further information, contact your JLG dealer or the JLG Industries Parts Department.

Part Number	Description	Qty./Machine

Part Number	Page
0080268	9-71
0080271	4-7
0100011	6-15, 7-9
0100087	9-71
0100093	4-8
0240156	3-49
0274239	11-4
0274255	11-4
0274273	11-4
0274548	11-4
0541408	7-11
0641405	3-41
0641406	6-3, 6-15
0641509	7-11
0641514	8-57
0641609	7-11
0641612	3-11
0641811	8-7
0642032	3-7, 3-11
0681810	3-11
0683020	1-3, 1-5
0701221	1-9
0860520	3-39, 3-41, 6-15
0903071	8-8
0903221	8-57
0903609	1-9
0930020	3-47
1001001422	4-7
1001080707	4-7
1001081280	6-17
1001081306	6-21
1001081310	6-21, 6-23
1001090063	3-11
1001090064	3-11
1001090134	9-77
1001090140	3-11
1001091304	9-71
1001092280	3-39
1001092281	9-71
1001092358	12-13
1001092359	12-5
1001092360	10-21
1001092391	3-37
1001092481	3-39, 3-41
1001092482	3-39, 3-41
1001093140	3-39
1001093141	3-39
1001093171	3-35, 3-39
1001093273	3-49
1001093377	3-19, 3-49
1001093465	3-49
1001093641	4-7
1001094330	3-49
1001094372	11-4
1001094830	3-49
1001095418	3-15
1001095739	5-85
1001095741	5-85
1001095744	5-115
1001095810	3-41
1001096019	3-39, 3-41
1001096020	3-39, 3-41
1001096021	3-39, 3-41
1001096023	3-39, 3-41
1001096024	3-39, 3-41
1001096025	3-39, 3-41
1001096162	3-41
1001096306	3-39
1001096314	12-4, 12-5, 12-9, 12-10
1001096904	3-39
1001097072	3-39
1001097168	3-39
1001098169	11-4
1001098582	3-39
1001099113	3-11
1001099115	3-11
1001099351	3-25
1001099901	3-29
1001099902	3-29
1001100044	4-21
1001100045	4-21
1001100227	3-19
1001100228	3-19
1001100229	3-19
1001100822	3-3
1001100823	3-3
1001100824	3-3
1001100849	4-21
1001100967	3-21
1001101085	6-15
1001101115	3-19
1001101116	3-19
1001101867	2-17
1001101956	3-11
1001102378	3-11
1001102657	4-7
1001102813	3-41
1001102844	6-11
1001103182	9-79
1001103491	9-53
1001103492	9-73
1001103493	7-3
1001103494	10-19
1001103619	5-25, 5-65
1001103626	5-5
1001103627	5-5
1001103631	5-51
1001103637	3-41
1001103730	3-41
1001103736	3-41
1001105703	5-129
1001105704	5-129
1001105705	5-129
1001106010	11-3
1001106011	11-3
1001109417	6-17
1001109573	1-9
1001110410	11-3
1001110411	11-3
1001110704	3-15
10114383	7-5, 7-7
10116401	7-5, 7-7
10118167	2-21
1012355	3-23
10125085	3-23
10138329	9-49
10138818	7-5, 7-7, 7-9
10139087	6-11
10165110	2-21
10165950	2-21
10167789	10-7, 10-9, 10-11
10238252	2-3, 2-5
10239367	6-13
10267585	3-23
10268516	4-15, 4-17
10268663	10-33
10268992	9-73
10339076	9-49
1060379	3-41
10700303	6-13
10700484	3-23
10701253	6-13
10704216	1-3, 1-5
10705034	3-31, 3-33
10705107	6-13
10717672	8-7
10720496	6-33
10721556	3-23
10721557	3-23
10725268	6-11
10725464	6-13
10727327	3-23
10727770	3-23
10728873	4-7
10731709	5-89, 5-115, 5-119
10731744	5-89, 5-121
10731761	5-117
10731789	5-43, 5-79
10731790	5-25, 5-65
10731845	5-91, 5-93, 5-95, 5-97, 5-103, 5-105
10731949	5-28, 5-31, 5-68, 5-71
10732071	5-119
10732072	5-119
10732095	5-117
10740662	9-49
10837247	9-59
10837352	9-49, 9-53
10837355	9-49
10837580	9-53
10837924	9-43, 9-47
10867167	9-59
10868086	9-53
10868902	9-53
1101202	10-15, 10-17, 10-19
1101203	10-15, 10-17, 10-19
1101244	9-51
1101312	4-15, 4-17
1101313	4-15, 4-17
11045080	3-23
11160110	3-23
11170040	3-23
1120591	4-7
11419080	3-23, 3-27
1170021	3-7
1170024	3-7
1170027	3-7
1170054	3-11
1170057	3-11
1319210	5-37, 5-41, 5-75
1319214	5-31, 5-71
1319229	5-87
1319333	5-7, 5-55
1319334	5-7, 5-55
1319335	5-7, 5-55
1319336	5-7, 5-55
1319337	5-7, 5-55
1319338	5-7, 5-55
1319339	5-7, 5-55
1319340	5-7, 5-55
1319341	5-7, 5-55
1319342	5-7, 5-55
1319343	5-7, 5-55
1319344	5-7, 5-55
1319345	5-7, 5-56
1319346	5-7, 5-56
1319347	5-7, 5-56
1319348	5-7, 5-56
1319349	5-7, 5-56
1319350	5-7, 5-56
1319351	5-7, 5-56
1319352	5-7, 5-56
13193535	7, 5-10, 5-16, 5-53, 5-56
1319354	5-8, 5-53
1319355	5-8, 5-53
1319356	5-8, 5-53
1319357	5-8, 5-53
1319358	5-8, 5-53
1319359	5-8, 5-53
1319360	5-8, 5-53
1319361	5-8, 5-53
1319362	5-8, 5-53
1319363	5-8, 5-53
1319364	5-8, 5-53
1319365	5-8, 5-53
1319366	5-8, 5-53
1319367	5-8, 5-53
1319369	5-8, 5-54
1319370	5-8, 5-54
1319371	5-8, 5-54
1319372	5-8, 5-54
1319373	5-8, 5-54

PART NUMBER INDEX

Part Number	Page
1319374	5-8, 5-54
1319375	5-8, 5-54
1319376	5-8, 5-54
1319377	5-8, 5-54
1319378	5-8, 5-54
1319379	5-8, 5-54
1319380	5-8, 5-54
1319381	5-8, 5-54
1319382	5-8, 5-54
1319383	5-8, 5-54
1319384	5-8, 5-54
1319385	5-8, 5-54
1319386	5-8, 5-54
1319387	5-54
1319388	5-8, 5-54
1319389	5-8, 5-54
1319390	5-8, 5-54
1319391	5-8, 5-54
1319392	5-8, 5-54
1319393	5-9, 5-54
1319394	5-9, 5-54
1319395	5-9, 5-54
1319396	5-9, 5-54
1319397	5-9, 5-54
1319398	5-9, 5-54
1319399	5-9, 5-54
1319400	5-9, 5-54
1319401	5-9, 5-54
1319402	5-9, 5-54
1319406	5-10, 5-53
1319412	5-59
1319414	5-59
1319415	5-19, 5-59
13194235-23, 5-25, 5-63, 5-65	
13194255-23, 5-27, 5-63, 5-67	
1319429	5-23, 5-63
1319433	5-23, 5-63
13194365-23, 5-25, 5-63, 5-65	
1319439	5-23, 5-63
1319440	5-23, 5-63
13194415-23, 5-25, 5-63, 5-65	
13194445-10, 5-37, 5-53, 5-75	
1319445	5-37, 5-41, 5-75
1319447	5-37, 5-41, 5-43, 5-75, 5-79
1319448	5-37, 5-75
1319449	5-37, 5-75
1319450	5-37, 5-75
1319451	5-37, 5-75
1319452	5-37, 5-75
1319453	5-37, 5-75
1319454	5-37, 5-75
1319455	5-37, 5-75
1319456	5-37, 5-75
1319457	5-37, 5-75
1319458	5-37, 5-75
1319459	5-37, 5-75
1319460	5-37, 5-75
1319461	5-37, 5-75
1319462	5-37, 5-41, 5-75
1319463	5-37, 5-75
1319464	5-37, 5-41, 5-43, 5-75, 5-79
1319470	5-37, 5-75
1319472	5-37, 5-41, 5-43, 5-75, 5-79
1319476	5-41
1319477	5-38, 5-41, 5-43, 5-76, 5-79
1319483	5-45, 5-81
1319484	5-45, 5-81
1319485	5-45, 5-81
1319488	5-45, 5-81
1319491	5-27, 5-67
1319496	5-28, 5-68
1319497	5-28, 5-68
1319499	5-28, 5-68
1319500	5-28, 5-68
1319501	5-28, 5-68
1319502	5-28, 5-68
1319504	5-28, 5-68
1319505	5-28, 5-68
1319506	5-23, 5-27, 5-45, 5-47, 5-63, 5-67, 5-81
1319510	5-27, 5-67
1319511	5-27, 5-67
1319512	5-27, 5-67
1319513	5-27, 5-67
1319514	5-27, 5-67
1319515	5-27, 5-67
1319516	5-27, 5-67
1319517	5-27, 5-67
1319518	5-27, 5-67
1319519	5-27, 5-67
1319520	5-27, 5-67
1319521	5-27, 5-67
1319522	5-27, 5-67
1319523	5-27, 5-67
1319524	5-27, 5-67
1319525	5-27, 5-67
1319526	5-27, 5-67
1319527	5-27, 5-67
1319529	5-27, 5-67
1319530	5-27, 5-67
1319531	5-27, 5-67
1319532	5-27, 5-67
1319533	5-27, 5-67
1319534	5-27, 5-67
1319535	5-27, 5-67
1319536	5-27, 5-67
13195375-27, 5-31, 5-67, 5-71	
1319538	5-27, 5-67
13195395-27, 5-31, 5-67, 5-71	
13195405-27, 5-31, 5-67, 5-71	
1319541	5-27, 5-67
13195425-27, 5-31, 5-67, 5-71	
1319543	5-27, 5-67
13195455-27, 5-31, 5-67, 5-71	
1319558	5-87
1319563	5-87
1319571	5-87, 5-89, 5-121
1319576	5-87
1319578	5-25, 5-31, 5-49, 5-65, 5-71, 5-83, 5-89, 5-121
1319581	5-89, 5-115
1319585	5-87, 5-89, 5-115
1319590	5-89
1319591	5-91, 5-93
1319595	5-91, 5-93, 5-95, 5-97, 5-103, 5-105, 5-107, 5-109, 5-111, 5-113
1319596	5-91, 5-93, 5-95, 5-97, 5-103, 5-105
1319600	5-91, 5-93, 5-95, 5-97, 5-99, 5-101, 5-103, 5-105, 5-107, 5-109, 5-111, 5-113
1319601	5-91, 5-93, 5-95, 5-97, 5-99, 5-101, 5-103, 5-105, 5-107, 5-109, 5-111, 5-113
1319602	5-91, 5-93, 5-95, 5-97, 5-99, 5-101, 5-103, 5-105, 5-107, 5-109, 5-111, 5-113
1319603	5-91, 5-93, 5-95, 5-97, 5-99, 5-101, 5-103, 5-105, 5-107, 5-109, 5-111, 5-113
1319604	5-91, 5-93, 5-95, 5-97, 5-99, 5-101, 5-103, 5-105, 5-107, 5-109, 5-111, 5-113
1319606	5-91, 5-93, 5-95, 5-97, 5-103, 5-105
1319607	5-91, 5-93
1319608	5-91, 5-93, 5-115
1319614	5-95, 5-97
1319615	5-95, 5-97, 5-103, 5-105, 5-107, 5-109, 5-111, 5-113
1319617	5-107, 5-109, 5-111, 5-113
1319618	5-107, 5-109, 5-111, 5-113
1319619	5-99, 5-101
1319620	5-107, 5-109, 5-111, 5-113
1319621	5-107, 5-109, 5-111, 5-113
1319622	5-107, 5-109, 5-111, 5-113
1319623	5-107, 5-109, 5-111, 5-113
1319624	5-107, 5-109, 5-111, 5-113
1319625	5-107, 5-109, 5-111, 5-113
1319626	5-107, 5-109, 5-111, 5-113
1319627	5-107, 5-109, 5-111, 5-113
1319628	5-107, 5-109, 5-111, 5-113
1319629	5-107, 5-109, 5-111, 5-113
1319630	5-107, 5-109, 5-111, 5-113
1319631	5-107, 5-109, 5-111, 5-113
1319632	5-107, 5-109, 5-111, 5-113
1319635	5-103, 5-105
1319636	5-103, 5-105, 5-107, 5-109, 5-111, 5-113
1319638	5-107, 5-109, 5-111, 5-113
1319641	5-87
1319646	5-89
1319647	5-121
1319648	5-121
1319652	5-119
1319661	5-119
13196665-25, 5-28, 5-65, 5-68	
1319670	5-89, 5-115, 5-119
1319683	5-119
1319684	5-119
1319685	5-119
1319686	5-119
1319687	5-119
1319688	5-119
1319689	5-119
1319693	5-119
1319694	5-119
1319719	5-115
1319726	5-115
1320748	5-121
1320754	5-121

Part Number	Page
1320755	5-121
1321136	8-8
1321148	5-23, 5-63
1321150	5-28, 5-68
1321151	5-28, 5-68
1321152	5-28, 5-68
1321153	5-19, 5-59
1321154	5-19, 5-59
1321155	5-41, 5-75
1321157	5-37, 5-41, 5-75
1321158	5-27, 5-67
1321159	5-27, 5-67
1321162	5-28, 5-68
1321163	5-28, 5-68
1321172	5-73
1321174	5-28, 5-68
1321175	5-41
1321177	5-99
1321178	5-73
1321184	5-19, 5-59
1321185	5-13
1321186	5-13
1321187	5-13
1321189	5-13
1321190	5-13
1321191	5-47
1321194	5-16
1321196	5-14
1321197	5-14
1321198	5-14
1321199	5-14
1321201	5-14
1321202	5-15
1321203	5-14
1321204	5-14
1321205	5-47
1321206	5-33
1321207	5-33
1321208	5-33
1321210	5-16
1321211	5-10, 5-53
1321212	5-16
1321213	5-13
1321214	5-47
1321215	5-19, 5-59
1321217	5-19
1321218	5-19
1321219	5-19
1321220	5-19
1321221	5-19
1321225	5-19, 5-59
13212265	-38, 5-43, 5-76, 5-79
1321228	5-41
1321230	5-13
1321231	5-45, 5-81
1321232	5-47
1321233	5-47
1321237	5-10, 5-53
1321238	5-81
1321239	5-76
1321242	5-45, 5-81
1321245	5-37, 5-75
1321246	5-37, 5-75
1321247	5-45, 5-81
1321248	5-16
1321249	5-41
1321250	5-41
1321251	5-41
1321254	5-41
1321255	5-47
1321256	5-41
1321257	5-41
1321258	5-47
1321259	5-59
1321260	5-59
1321265	5-119
1321733	8-12, 8-20, 8-32
1380165	10-12
14404978	4-8
1560023	4-17
1701509	3-39, 3-41
1702773	3-39, 3-41
1704277	3-39, 3-41
1704885	3-39, 3-41
1705687	11-3
1705936	11-3
1705956	11-4
1705957	11-4
1706101	11-3
1706103	11-3
1706104	11-3
1706105	11-3
1706168	11-3
1706170	11-3
1706300	11-3
1706511	11-4
1706892	3-39, 3-41
1707077	9-71
1707079	9-71
1707114	9-71
2080040	3-41
2080044	3-39
2110404	8-55
21106048	-23, 8-49, 8-55, 9-75
2110606	3-11, 3-33, 7-15, 7-19, 8-28, 8-35, 8-37, 8-45, 8-49, 8-51, 8-53, 8-55
2110806	8-11, 8-12
2110808	3-11, 8-3, 8-7, 8-24, 8-28, 8-32, 8-39, 8-43, 8-45
2110810	3-23, 8-15, 8-20
2111212	8-4, 8-8
2111612	8-3, 8-7
2130404	8-55
2130604	8-45, 8-49, 9-75
2130606	3-31, 3-33, 8-4, 8-8, 8-11, 8-24, 8-35, 8-37, 8-45, 8-49, 8-53, 8-55, 9-75
2130608	3-31, 3-33, 8-45
2130808	3-23, 8-12, 8-23, 8-27, 8-31, 8-39, 8-41, 8-45
2130810	8-45
2130812	8-15, 8-19
2131210	8-57
2131212	8-3, 8-7, 8-15, 8-19, 8-20
2131616	8-57
2150606	8-37, 8-53, 8-55
2150808	8-45
2170106	8-45, 8-55
2170108	8-32
2170206	8-55
2170212	8-20
21703068	-11, 8-28, 8-45, 9-75
2170406	8-8, 8-11
2170706	8-11, 8-37, 8-45, 8-53, 8-55, 9-75
2170708	8-11
2170716	8-7
2170912	8-3, 8-7
2171108	8-19
2171112	8-19
2171206	3-31
2172006	8-11
2172010	8-15, 8-20, 8-23, 8-27, 8-31
2172104	8-55
2172106	3-11, 3-31, 8-11, 8-37, 8-45, 8-49, 8-53, 8-55, 9-75
2172108	3-23, 8-43
2172116	8-3, 8-7, 8-59
2220218	8-35, 8-37, 9-75
2220371	3-9
2220372	3-9
2220415	3-13, 3-15
2220473	3-13, 3-15
2220609	3-13, 3-15
2220628	3-13, 3-15
2220775	3-13
2340037	3-37
2340038	3-37
2340039	3-37
2340045	3-37
2340046	3-37
2600281	3-39, 3-41
2711992	3-9
2716143	12-19
2716153	12-15
2716629	8-45
2716850	9-37
2716864	9-17
2716894	9-19
2716900	9-33
2716901	9-35
2716904	9-11
2716906	9-23
2716908	9-29
2716911	8-3, 8-7
2716914	8-59
2716915	8-59
2716920	8-43
2716921	8-43
2716922	8-11
2716923	8-11
2716924	8-11
2716925	8-45
2716927	8-45
2716928	8-45
2716934	8-3, 8-7
2716936	8-3
2716937	8-3
2716938	8-11
2716939	8-11
2716940	8-15, 8-20
2716950	8-35, 8-37
2716951	8-11
2716952	8-11
2716953	8-45
2716954	8-45
2716955	8-45
2716956	8-45
2716957	8-45
2716960	8-49, 8-51, 8-53
2716961	8-49
2716962	8-49, 8-51, 8-53
2716963	8-35, 8-37, 8-49, 8-51, 8-53
2716964	8-49
2716965	8-49
2716966	8-35, 8-37
2716967	8-49
2716968	8-51, 8-53
2716969	8-51
2716974	8-4
2716980	8-39
2716981	8-39
2716986	8-15
2716989	8-15
2716997	8-15
2716998	8-15, 8-23, 8-27
2717000	8-35, 8-37
2717012	9-21, 9-25
2717013	9-27, 9-31
2717014	8-57
2717015	8-57
2717016	8-59
2717029	8-3, 8-7
2717030	8-3, 8-7
2717031	8-3, 8-7
2717032	8-3, 8-7
2717038	8-11

PART NUMBER INDEX

Part Number	Page
2717039	8-45
2717040	8-45
2717050	8-57
2717051	8-57
2717057	8-35, 8-37
2717058	8-35, 8-37
2717059	8-35, 8-37
2717060	8-35, 8-37
2717062	8-24
2717063	8-15, 8-20, 8-31
2717064	8-15, 8-20
2717065	8-24, 8-28, 8-31
2717066	8-24, 8-28, 8-31
2717067	8-11
2717069	8-15
2717070	8-15, 8-35, 8-37
2717084	8-55
2717093	3-23
2717115	8-23
2717118	8-24
2717131	8-28
2717132	8-28
2717133	8-28
2717134	8-27
2717144	8-15, 8-19
2717145	8-15, 8-19
2717146	8-15, 8-19
2717147	8-15, 8-19
2717160	3-31, 3-33
2717161	3-31, 3-33
2717162	3-31, 3-33
2717169	8-35, 8-37
2717171	8-35, 8-37
2717172	8-35, 8-37
2717173	8-35, 8-37
2717175	8-23, 8-27, 8-31
2717176	8-23, 8-27, 8-31
2717178	8-55
2717180	8-55
2717184	8-55
2717186	8-55
2717187	8-55
2717188	8-55
2717189	8-55
2717190	8-55
2717191	8-23, 8-27
2717192	8-23, 8-27
2717193	8-8, 9-43
2717194	8-8, 9-43
2717200	12-17
2717204	8-4, 8-8
2717209	8-55
2717241	9-5
2717242	9-15
2717243	9-9
2717252	8-28
2717253	8-28
2717265	8-19, 8-31
2717266	8-19
2717267	8-19
2717268	8-19
2717269	8-19
2717270	8-19
2717271	8-19
2717272	8-41
2717273	8-19
2717275	8-31
2717276	8-31
2717277	8-19
2717278	8-19
2717283	3-31, 3-33
2717287	3-13, 3-15
2717288	8-7
2717289	8-7
2717384	8-20
2720557	4-13
2900707	9-53
2900770	9-17, 9-19, 9-77, 12-19
2915007	9-44
2915032	4-21
2915034	4-3
2915035	4-4
2915053	10-31
2915055	4-13
2915056	6-15
2915155	4-7
2915158	7-9
2915170	4-3
2940074	3-39, 3-41
31200160	3-39, 3-41
31200336	3-39, 3-41
31200387	3-39, 3-41
31200388	3-39, 3-41
3251813	11-4
3290405	1-7
3300240	3-7, 3-11
3311401	3-41
3380542	6-11
3421453	3-41
3423242	3-7, 3-11
3423275	3-7, 3-11
3423276	3-7, 3-11, 3-15
3423307	3-11
3460407	4-21
3460408	4-21
3460440	8-7
3460446	8-57
3460471	8-57
3520072	3-41
3520198	3-39
3575924	1-3, 1-5
3575947	4-3
3576011	5-3
3576286	7-11
3620060	4-13
3760170	3-41
3820020	3-39, 3-41
3841203	3-11
3860123	2-9
3900140	4-8
3980039	6-15
4060805	6-29
4100181	9-71, 11-3
4105262	2-3, 2-5
4107692	3-13
4107702	3-13
4107712	3-13
4108232	3-9
4108302	9-71, 11-3
4108991	11-3
4109801	11-3
4110130	11-3
4110137	11-3
4110184	4-11, 4-13, 11-3
4110252	3-23
4110349	11-3
4110350	11-3
4110352	11-3
4110356	11-3
4110358	11-3
4110359	11-3
4110360	11-3
4110361	11-3
4110366	11-3
4110367	11-3
4110368	11-3
4110389	11-3
4110390	11-3
4110392	11-3
4110405	11-3
4110412	3-23, 3-27
41104223	3-23, 3-25, 3-27, 3-29
4110423	11-3
4110424	3-23
4110461	3-45
4110473	3-13, 3-31, 3-33
4150512	9-43
4220238	2-7, 2-9
4340962	4-21
4341041	8-57
4341074	6-3
4341154	7-11
4341156	7-11
4360569	6-11
4360609	10-31
4400473	4-7
4520319	5-127
4520405	5-125
4520407	5-125
4520412	5-127
4520413	5-127
4520466	5-129
4520467	5-129
4520469	5-129
4520648	5-127
4520649	5-127
4520650	5-127
4520652	5-125
4520653	5-125
4640438	9-77
4641316	8-49
4641501	3-33
4641502	3-33
4711400	3-41, 7-11
4711500	7-11
4711600	7-11
4751400	3-39, 6-3, 6-15
4761400	7-11
4761500	7-11
4761600	7-11
4832100	1-9
4846452	3-39, 3-41
4891800	3-11
4922986	10-9
4923054	10-17
4923216	10-11
4923263	10-31
4923266	10-31
4923344	7-11
4923358	10-11
4923359	10-9
4923361	10-31
4923604	10-19
5201012	4-21
5221000	4-21
6604662	3-13, 3-15
6608621	3-13
6611172	10-3, 10-5, 10-15, 10-17, 10-19
6620731	2-3, 2-5
6621412	10-7, 10-9, 10-12
6623576	1-9
6623749	4-7
6623864	6-17
70000656	5-119
70020035	5-121
70020036	5-121
70020197	5-121
70020310	9-9
70020354	5-121
70020355	5-121
70020367	4-3
70020408	5-28, 5-68
70020409	5-28, 5-68
70020413	5-33, 5-63
70020428	12-15, 12-17
70020483	5-28, 5-68
70020484	5-28, 5-68
70020485	5-28, 5-68
70020486	5-28, 5-68
70020487	5-28, 5-68
70020551	7-11
70020562	3-47
70021111	5-63
70021227	5-99

Part Number	Page
70021228	5-99
70021268	5-99
70021269	5-99
70021342	3-25, 3-47
70021349	3-25
70021358	3-47
70021359	3-47
70021360	3-47
70021361	3-47
70021362	3-47
70021364	3-47
70021365	3-47
70021366	3-47
70021367	3-47
70021375	3-47
70021387	3-25, 3-47
70021391	3-47
70021392	3-47
70021393	9-81
70021399	3-47
70021415	3-25
70021440	9-81
70021444	9-81
70021446	9-81
70021447	9-81
70021448	9-81
70021451	9-81
70021452	9-81
70021464	9-81
70021465	9-81
70021466	9-81
70021495	5-23, 5-63
70021526	5-87
70021553	5-37, 5-43, 5-75, 5-79
70021554	5-37, 5-43, 5-75, 5-79
70021555	5-45
70021568	5-23, 5-63
70021569	5-23, 5-63
70021570	5-23, 5-63
70021571	5-23, 5-63
70021573	3-23
70021599	4-7
70021617	5-23, 5-63
70021726	5-23, 5-63
70021789	5-41
70021790	5-41, 5-43
70021815	10-19, 10-28
70021859	12-4, 12-5, 12-9, 12-10
70021908	9-77
70021920	5-89
70021921	3-25
70021935	3-25
70021977	3-25
70021978	3-25
70021979	3-25
70021980	3-47
70021981	3-47
70021982	3-47
70022028	3-25
70022038	9-77
70022039	9-77
70022040	9-77
70022041	9-77
70022042	9-77
70022043	9-77
70022044	9-79
70022045	9-79
70022046	9-79
70022170	5-43, 5-79
70022171	5-31, 5-71
70022172	5-25, 5-65
70022173	5-25, 5-65
70022174	5-25, 5-65
70022175	5-25, 5-65
70022176	5-31, 5-71
70022177	5-25, 5-65
70022178	5-25, 5-65
70022179	5-43, 5-79
70022180	5-25, 5-65
70022181	5-25, 5-65
70022182	5-25, 5-65
70022183	5-31, 5-71
70022184	5-25, 5-65
70022185	5-21, 5-61
70022186	5-31, 5-71
70022187	5-43, 5-79
70022188	5-43, 5-79
70022189	5-31, 5-71
70022190	5-31, 5-71
70022191	5-35
70022192	5-35
70022193	5-31, 5-71
70022194	5-31, 5-71
70022195	5-35
70022196	5-31, 5-71
70022197	5-49, 5-83
70022198	5-31, 5-71
70022199	5-35
70022200	5-21, 5-61
70022201	5-25, 5-65
70022202	5-35
70022203	5-43, 5-79
70022204	5-25, 5-65
70022205	5-25, 5-65
70022206	5-25, 5-65
70022207	5-49, 5-83
70022208	5-43, 5-79
70022209	5-31, 5-71
70022210	5-25, 5-65
70022211	5-21, 5-61
70022213	5-10, 5-16, 5-53
70022215	5-31, 5-35, 5-71
70022216	5-9, 5-15, 5-55
70022217	5-25, 5-65
70022218	5-43, 5-79
70022219	5-25, 5-65
70022220	5-10, 5-16, 5-53
70022221	5-49, 5-83
70022222	5-31, 5-71
70022223	5-43, 5-79
70022225	5-21, 5-61
70022226	5-21, 5-61
70022227	5-21, 5-61
70022228	5-21, 5-61
70022229	5-21, 5-61
70022230	5-43, 5-79
70022232	5-7
70022233	5-49, 5-83
70022234	5-43, 5-79
70022235	5-31, 5-71
70022236	5-31, 5-71
70022237	5-43, 5-79
70022238	5-43, 5-79
70022239	5-49, 5-83
70022240	5-43, 5-79
70022241	5-25, 5-65
70022242	5-49, 5-83
70022243	5-49, 5-83
70022244	5-10, 5-16, 5-57
70022245	5-10, 5-16, 5-53
70022246	5-25, 5-65
70022247	5-25, 5-65
70022248	5-35
70022249	5-43, 5-79
70022250	5-31, 5-71
70022251	5-35
70022252	5-35
70022253	5-31, 5-71
70022254	5-25, 5-65
70022255	5-25, 5-65
70022256	5-49, 5-83
70022257	5-43
70022259	5-25, 5-65
70022260	5-21
70022261	5-21
70022262	5-21, 5-61
70022263	5-21
70022264	5-21
70022265	5-43
70022266	5-43
70022267	5-43
70022268	5-43
70022270	5-49
70022271	5-49
70022272	5-13
70022273	5-49
70022274	5-49
70022278	5-49
70022279	5-49
70022280	5-57
70022282	5-31, 5-71
70022284	5-61
70022285	5-61
70022384	9-19
70022790	5-119
7010542	9-53
7010543	9-53, 9-54
7012941	9-53
7016603	12-13
7017402	9-53
7017496	9-57
7020368	8-24, 8-28, 8-32
7020369	8-24, 8-28, 8-32
7024574	9-79, 12-15, 12-17
7026479	7-11
7026480	7-11
7026481	7-11
7026482	7-11
7026483	7-11
7026484	7-11
7026578	5-121
7026618	5-121
7026628	9-5, 9-9
7026629	9-5
7026630	9-7, 9-9
7026744	5-87
7026745	5-87
7026747	5-87
7026748	5-87
7026749	5-87
7026750	5-89
7026751	5-89
7026752	5-89
7026753	5-89
7026754	5-89
7026755	5-89
7026756	5-89
7026757	5-107, 5-109
7026758	5-91, 5-93, 5-95, 5-97, 5-99, 5-101, 5-103, 5-105, 5-107, 5-109, 5-111, 5-113
7026759	5-91, 5-93, 5-95, 5-97, 5-99, 5-101, 5-103, 5-105, 5-107, 5-109, 5-111, 5-113
7026760	5-91, 5-93, 5-95, 5-97, 5-99, 5-101, 5-103, 5-105, 5-107, 5-109, 5-111, 5-113
7026761	5-91, 5-93, 5-95, 5-97, 5-99, 5-101, 5-103, 5-105, 5-107, 5-109, 5-111, 5-113
7026762	5-111, 5-113

PART NUMBER INDEX

Part Number	Page
7026763	5-95, 5-97
7026764	5-99, 5-101
7026765	5-99, 5-101
7026766	5-99, 5-101
7026767	5-101
7026768	5-101
7026769	5-87, 5-99, 5-101, 5-121
7026770	5-103, 5-105
7026771	5-87
7026772	5-87
7026773	5-115
7026774	5-87
7026775	5-87
7026776	5-117
7026777	5-117
7026778	5-117
7026779	5-117
7026780	5-117
7026781	5-117
7026782	5-115
7026783	5-115
7026784	5-115
7026785	5-119
7026786	5-119
7026787	5-119
7026788	5-119
7026789	5-119
7026790	5-119
7026791	5-115
7026792	5-89, 5-115
7026793	5-115
7026794	5-89, 5-115, 5-121
7026798	6-15
7026799	6-15
7026900	6-15
7026901	6-15
7026902	6-15
7026905	6-15
7026906	6-15
7027211	5-23, 5-63
7027212	5-33
7027217	5-25, 5-28, 5-68
7027218	5-37, 5-75
7027219	5-37, 5-75
7027220	5-37, 5-75
7027221	5-37, 5-75
7027222	5-37, 5-75
7027225	5-19
7027227	5-23
7027229	5-7
7027230	5-19
7027256	5-87
7027258	5-107
7027259	5-107, 5-111
7027260	5-111
7027261	5-91
7027264	5-95
7027266	5-99
7027267	5-99
7027268	5-103
7027270	5-121
7027271	5-121
7027272	5-121
7027273	5-121
7028738	6-19
7028783	4-3
7028838	4-7
7028932	9-71
7028976	5-59
7028977	5-37, 5-41, 5-75
7028979	5-37, 5-75
7029033	5-121
7029081	4-13
7029104	5-33
7029267	5-117, 5-119
7029411	6-29
7029412	6-29
7029413	6-29
7029414	6-29
7029415	6-29
7029417	5-115
7029419	7-15, 7-17, 7-19
7029513	9-9, 9-15
7029514	9-15
7029517	9-15
7029518	9-9, 9-15
7029520	3-35
7029521	3-35
7029522	3-35
7029525	4-3
70295325	91, 5-93, 5-95, 5-97
70295335	91, 5-93, 5-95, 5-97
7029692	3-25, 3-47
7029714	3-47
7029715	5-117, 5-119
7029716	9-71
7029760	9-77
7029829	4-3
7029830	4-3
7029831	4-3
7029849	5-91, 5-93, 5-95, 5-97, 5-99, 5-101, 5-107, 5-109, 5-111, 5-113
7029850	5-91, 5-93, 5-95, 5-97, 5-99, 5-101, 5-107, 5-109, 5-111, 5-113
7029851	5-91, 5-93, 5-95, 5-97, 5-99, 5-101, 5-107, 5-109, 5-111, 5-113
7029852	5-91, 5-93, 5-95, 5-97, 5-99, 5-101, 5-107, 5-109, 5-111, 5-113
7029906	7-11
7029907	7-11
7029972	5-89
7029973	5-89
7029991	4-3
7057141	4-11, 4-13
7062922	3-13, 3-15
7065482	3-9
7070191	3-9
7075611	2-3, 2-5
7077481	3-9
7077501	3-9
7077511	3-9
7083922	2-11, 2-13
7085411	3-9
7085501	3-9
7085552	2-15
7085571	2-15
7096491	6-13
7097523	3-37
7110494	3-13
7110694	3-13
7110702	3-13, 3-15
7110712	3-13, 3-15
7110722	3-13, 3-15
7110744	3-3
7112523	3-17
7112533	3-17
7112642	3-17, 3-19
7112704	3-17
7114032	2-17
7114941	3-17, 3-19
7117204	3-9
7117214	3-9
7117244	3-9
7117254	3-9
7117264	3-9
7117502	2-17
7117582	2-17
7118882	2-15
7118892	2-15
7118993	3-5
7120182	2-7
7121422	2-15
7125741	3-9
7125800	3-13
7125861	10-11, 12-21
7125891	8-31
7126172	2-3, 2-5, 2-7, 2-9, 2-11, 2-13, 2-21
7126182	2-3, 2-5, 2-7, 2-9, 2-11, 2-13, 2-21
7127091	7-5
7128772	3-5, 3-9
7128792	3-5, 3-9
7129300	3-17
7129441	6-3
7130412	9-61, 9-63, 9-65, 9-67, 9-69
7137142	1-3, 1-5, 2-21
7138209	9-71
7138361	6-31
7138478	6-31
7138483	6-31
7138658	5-127
7138659	5-127
7138660	5-129
7138661	5-129
7138740	9-71
7138833	7-13
7138836	7-13
7138858	6-13, 6-15
7138878	10-17, 10-19
7138883	6-13
7138944	6-11
7138979	2-19
7138986	2-19
7139108	7-3, 7-5, 7-7, 7-9
7139159	5-127
7139160	5-127
7139161	5-129
7139162	5-129
7139165	5-129
7139168	5-127
7139325	2-3, 2-5
7139605	5-125
7139606	5-125
7139608	3-21
7139739	5-125
7139740	5-125
7139746	3-37
7139747	3-37
7139886	1-3, 1-5, 2-3, 2-5, 2-21
7139911	2-21
7139913	5-123
7139914	5-123
7139915	2-21
7139918	3-33, 8-23
7139919	4-19
7139980	8-4, 8-8
7139983	8-4
7147400	1-9
7150668	1-9
7150690	12-4
7150695	1-9
7150696	1-9
7150702	12-4
7150703	12-4
7150706	1-9
7150730	12-5, 12-10
7151241	6-3
7151242	6-3
7151246	4-7
7151250	6-11

Part Number	Page
7151251	6-11
7151262	6-11
7151271	6-11
7151272	6-11
7151273	6-11
7151276	6-5
7151279	6-3
7151280	6-11
7151285	7-5, 7-7, 7-9
7151313	6-11
7151317	6-3
7151322	12-5
7151337	6-11
7160900	3-37
7161000	3-37
7162000	3-37
7300032	2-3, 2-5, 2-7, 2-9, 2-11, 2-13, 9-3, 9-5, 9-7, 9-9
7300034	2-3, 2-5, 2-7, 2-9, 2-11, 2-13, 2-21
7300064	2-3, 2-5, 2-9
7300076	2-17
7300078	2-17
7300080	2-19
7300094	2-15
7300095	2-15
7300098	2-7
7300099	2-11
7300106	2-19
7300111	2-11, 2-13
7300112	2-11, 2-13
7300135	7-3
7300136	7-3
7300137	7-3
7300143	7-3, 7-5, 7-7, 7-9
73002189	61, 9-63, 9-65, 9-67
7300226	9-71
7300260	1-3
7300272	4-13
7300285	4-15, 4-17
7300287	4-11, 4-13
7300288	4-11
7300326	1-3, 1-5
7300327	1-3, 1-5
7300336	10-17
7300337	10-35
7300338	10-31
7300339	10-7
7300340	10-33
7300341	10-3, 10-5
7300342	10-3, 10-5
7300343	10-3, 10-5
7300344	10-7, 10-9, 10-12
7300346	12-21
7300347	12-5
7300348	12-5
7300349	12-10
7300350	12-10
7300351	12-13
7300353	10-17, 10-19
7300364	1-7
7300370	1-7
7300374	4-11, 4-13
7300375	4-11, 4-13
7300377	4-7
7300378	4-7
7300379	4-7
7300409	7-13
7300411	10-21
7300423	12-4
7300424	12-9
7300433	10-5, 12-21
7300435	4-3, 5-3
7300439	1-3, 1-5
7300445	5-3
7300446	4-3
7300447	4-3
7300448	1-5
7300467	8-35, 8-37
7300468	8-35, 8-37
7300469	8-35, 8-37
7300479	9-71
7300484	8-3
7300485	8-3, 8-7
7300487	9-71
7300490	9-61, 9-63, 9-65, 9-67, 9-69
7300499	8-35, 8-37
7300503	2-21
7300509	9-3, 9-5, 9-7, 9-9
7300510	4-7
7300511	2-11
7300512	2-11
7300516	2-3, 2-7, 2-9
7300517	2-7, 2-9
7300518	2-7, 2-9
7300522	2-9
7300534	1-3, 1-5
7300535	1-5, 12-21
7300536	9-17, 9-19
7300537	9-71
7300538	9-71
7300539	9-71
7300566	2-21
7300567	8-23, 8-27, 8-31
7300572	2-21
7300573	1-3, 1-5
7300579	2-7
7300580	2-21
7300586	8-39
7300587	8-39
7300609	1-7
7300613	2-17
7300618	8-15, 8-19, 8-23, 8-27, 8-31
7300620	2-11, 2-13
7300628	11-3
7300630	1-7
7300682	7-5
7300687	1-7
7300704	5-125
7300716	2-21
7300723	2-3, 2-5
7300732	8-3, 8-7
7300737	8-15, 8-20
7300738	8-15, 8-20
7300739	8-45
7300740	8-45
7300741	8-15, 8-20
7300742	8-23, 8-27, 8-31
7300743	8-24, 8-27, 8-31
7300744	8-15, 8-20
7300745	8-24, 8-27, 8-31
7300746	8-24, 8-27, 8-31
7300750	8-11, 8-15, 8-19, 8-23, 8-27, 8-31
7300754	1-3, 1-5
7300757	8-11
7300778	8-11
7300793	1-3, 1-5
7300805	2-9
7300816	2-13
7300829	2-11, 2-13
7300853	10-7, 10-9, 10-11
7300899	2-13
7300911	2-17
7300912	2-19
7300927	8-15, 8-19, 8-23, 8-27, 8-31
7300944	8-45
7300945	8-11
7300946	8-45
7300947	8-11
7300948	8-35, 8-37
7300949	8-35, 8-37
7300950	2-3
7300966	2-5
7300969	8-3, 8-7
7300970	2-19
7300973	2-9, 2-13
7300983	3-9
7300987	9-73
7300998	8-3
7300999	8-12
7301001	8-12
7301002	8-49
7301003	8-49
7301004	8-49
7301005	8-49
7301013	9-73
7301030	8-4
7301033	2-21
7301040	3-21
7301054	5-127
7301055	5-125
7301056	5-129
7301066	7-3
7301072	8-23, 8-27
7301076	4-7
7301093	9-69
7301147	10-15, 10-17, 10-19
7301149	1-3, 1-5
7301154	8-23, 8-27
7301165	4-19, 4-21
7301166	11-4
7301171	6-27
7301175	2-3
7301178	3-27
7301179	3-23
7301180	3-45
7301183	2-5
7301191	3-23
7301203	11-4
7301225	12-4
7301229	12-4
7301230	12-4
7301233	12-4
7301236	12-9
7301237	12-9
7301238	12-4, 12-9
7301253	2-11
7301257	2-13
7301259	6-29
7301260	10-21
7301261	6-29, 10-21
7301262	6-31
7301264	6-31
7301265	10-21
7301279	6-11
7301289	3-27
7301294	3-31
7301295	3-33
7301301	8-23, 8-27, 9-43
7301302	6-31
7301308	2-21
7301312	1-7
7301318	12-4
7301319	12-5, 12-9
7301320	12-4
7301321	12-4
7301322	12-5, 12-9
7301323	12-4
7301324	12-4, 12-5, 12-9, 12-10
7301325	12-4
7301326	6-25
7301327	12-4
7301328	12-4
7301341	12-4, 12-5, 12-9, 12-10
7301342	12-4, 12-5, 12-9, 12-10
7301343	12-4, 12-5, 12-9, 12-10
7301345	12-4, 12-9

PART NUMBER INDEX

Part Number	Page
7301346	12-4, 12-5, 12-9
7301371	1-7
7301372	1-7
7301373	1-7
7301379	11-3
7301380	11-3
7301383	11-3
7301384	11-4
7301392	7-9
7301393	7-9
7301394	7-9
7301408	3-31, 3-33, 3-37
7301412	10-11
7301413	7-9
7301434	6-29
73014388	15, 8-24, 8-28, 8-32
7301441	6-31
7301442	6-31
7301443	6-31
7301444	6-31
7301446	7-11
7301448	10-11, 12-21
7301449	10-12, 12-21
7301450	10-11, 12-21
7301457	6-33
7301458	6-33
7301476	6-33
7301478	6-33
7301479	6-33
7301495	11-3
7301516	1-5
7301523	10-5, 12-21
7301529	10-11, 10-31
7301533	2-7, 2-9
7301535	2-7, 2-9
7301536	8-23, 8-27, 8-31
7301538	8-43
7301568	3-33
7301569	3-31, 3-33
7301578	3-31
7301579	3-31, 3-33
7301586	11-3
7301600	10-15
7301605	9-61
7301641	8-23, 8-27, 8-31
7301642	8-23, 8-27, 8-31
7301657	6-33
7301658	6-33
7301659	6-33
7301660	6-33
73016628	15, 8-24, 8-28, 8-32
73016638	15, 8-24, 8-28, 8-32
73016668	15, 8-24, 8-28, 8-32
73016678	15, 8-24, 8-28, 8-32
7301670	6-7
7301671	6-9
7301718	3-45
7301726	3-31
7301730	6-5
7301731	6-5
7301747	6-17
7301756	2-9
7301757	2-9
7301762	6-11
7301772	8-3, 8-7
7301782	6-31
7301809	7-19
7301810	7-19
7301811	6-9
7301812	6-9
7301815	6-31
7301831	9-43
7301843	8-7, 9-43
7301845	5-125
7301873	8-8
7301874	8-8
7301893	10-3, 10-5, 12-21
7301998	12-5, 12-10
7302032	8-31
7302064	2-3
7302065	2-5
7302187	11-4
7302331	7-7
7310012	4-3, 10-9
7310027S	2-21
77133136	8-57
77133137	8-57
77373058	10-31
8024036	5-37, 5-41
8024037	4-4
8024038	4-3
8024043	4-3
8024044	4-4
80240458	16, 8-24, 8-28, 8-32
8024061	9-3
8024062	9-7
8025655	12-15, 12-17
80263012	3-39
80264082	6-17
80304082	5-10, 5-16, 5-53
80304088	5-9, 5-15, 5-54
80304089	5-9, 5-15, 5-54
80304090	5-9, 5-15, 5-54
80304091	5-9, 5-15, 5-54
80304092	5-9, 5-15, 5-54
80304093	5-9, 5-15, 5-54
80304094	5-9, 5-15, 5-54
80304095	5-9, 5-15, 5-55
80304096	5-9, 5-15, 5-55
80304097	5-9, 5-15, 5-55
80304099	5-9, 5-15, 5-55
80304100	5-9, 5-15, 5-55
80304101	5-10, 5-16, 5-55
80304102	5-10, 5-16, 5-55
80304104	5-9, 5-15, 5-55
80304107	5-9, 5-15, 5-55
80304108	5-9, 5-15, 5-55
80304110	5-9, 5-15, 5-54
80304111	5-9, 5-15, 5-54
80304112	5-9, 5-15, 5-54
80304113	5-9, 5-15, 5-55
80304115	5-9, 5-15, 5-55
80304117	5-9, 5-15, 5-55
80304118	5-9, 5-15, 5-55
80304119	5-9, 5-15, 5-55
80304120	5-9, 5-15, 5-55
80304121	5-9, 5-15, 5-55
80304122	5-9, 5-15, 5-55
80304123	5-9, 5-15, 5-55
80304124	5-9, 5-15, 5-54
80304125	5-9, 5-15, 5-55
80304126	5-9, 5-15, 5-55
80304127	5-9, 5-15, 5-55
80304128	5-9, 5-15, 5-55
80304129	5-9, 5-15, 5-55
80304130	5-9, 5-15, 5-55
80304131	5-9, 5-15, 5-55
80304132	5-9, 5-15, 5-55
80304133	5-9, 5-15, 5-55
80304134	5-10, 5-15, 5-55
80304135	5-10, 5-15, 5-55
80304136	5-10, 5-15, 5-55
80304137	5-10, 5-15, 5-55
80304143	5-8, 5-14, 5-56
80304144	5-8, 5-13, 5-56
80304145	5-7, 5-13, 5-56
80304146	5-7, 5-13, 5-56
80304147	5-8, 5-14, 5-56
80304148	5-8, 5-13, 5-56
80304149	5-8, 5-13, 5-56
80304150	5-7, 5-13, 5-56
80304151	5-7, 5-13, 5-56
80304152	5-7, 5-13, 5-56
80304153	5-7, 5-13, 5-56
80304154	5-7, 5-13, 5-56
80304155	5-7, 5-13, 5-56
80304156	5-7, 5-13, 5-56
80304157	5-7, 5-13, 5-56
80304158	5-7, 5-13, 5-56
80304159	5-7, 5-13, 5-56
80304160	5-7, 5-13, 5-56
80304161	5-7, 5-13, 5-56
80304162	5-7, 5-13, 5-56
80304163	5-7, 5-13, 5-56
80304164	5-7, 5-13, 5-56
80304165	5-7, 5-13, 5-56
80304166	5-8, 5-13, 5-56
80304167	5-8, 5-13, 5-56
80304168	5-8, 5-13, 5-56
80304169	5-8, 5-14, 5-56
80304173	5-37, 5-41, 5-43, 5-76, 5-79
80304227	5-47, 5-99, 5-101
80304394	5-87, 5-89, 5-115, 5-121
80304405	5-37, 5-41, 5-75, 5-87
80304462	5-31, 5-71
8032994	9-57
8033075	6-21, 6-23
8033761	9-51
8033769	9-53
8033786	9-79, 12-15, 12-17
8033789	9-79
8034798	6-17
8034800	6-17
8034801	6-17
8034803	6-17
8034804	6-17
8034805	6-17, 6-23
8034807	6-23
8034808	6-17, 6-23
8034811	6-17
8034815	6-21
8035308	9-11
8035309	9-11
8035315	9-3, 9-5, 9-7, 9-9
8035321	9-17, 9-19
8035322	9-17, 9-21, 9-25, 9-27, 9-31, 9-37
8035323	9-17, 9-21, 9-25, 9-27, 9-31
8035324	9-17
8035326	9-17
8035327	9-17, 9-19
8035329	9-33
8035330	9-33
8035332	9-33
8035392	6-21
8035393	6-21
8035410	6-21
8035416	6-17
8035439	6-9
8035441	6-9
8035445	6-9
8035475	6-17
8035477	6-9, 6-17
8035478	6-17
8035479	6-17
8035486	6-17
8035490	6-5, 6-7, 6-19
8035493	6-23
8035498	6-23
8035499	6-23
8035506	6-17
8035509	6-17
8035511	6-17
8035523	6-5, 6-7, 6-9, 6-19
8035536	9-79, 12-15
8035547	9-35
8035631	6-9
8035632	6-9
8035637	6-9
8035639	6-9
8035640	6-7, 6-19
80357579	21, 9-23, 9-25, 9-57

Part Number	Page
8035781	9-57
8035782	9-57
8035784	9-57
8035785	9-11, 9-13, 9-15, 9-21, 9-23, 9-25, 9-57
8035830	9-79, 12-15
8035831	12-19
8035855	9-43, 9-47
8035861	12-15
8035862	9-79, 12-15
8035863	9-79, 12-15
8035865	12-19
8035866	12-19
8035867	12-19
8035868	12-19
8035871	5-13
8035872	5-13
8035873	5-13
8035874	5-13
8035875	5-13
8035876	5-13
8035877	5-13
8035878	5-13
8035879	5-13
8035881	5-14
8035882	5-14
8035883	5-14
8035884	5-14
8035885	5-14
8035886	5-14
8035887	5-14
8035888	5-14
8035889	5-14
8035890	5-14
8035891	5-14
8035892	5-14
8035893	5-14
8035894	5-14
8035895	5-14
8035896	5-14
8035897	5-14
8035898	5-14
8035899	5-14
8035900	5-14
8035901	5-14
8035902	5-14
8035903	5-14
8035904	5-14
8035905	5-14
8035906	5-14
8035907	5-14
8035908	5-14
8035909	5-14
8035910	5-14
8035911	5-14
8035912	5-14
8035913	5-14
8035914	5-14
8035915	5-14
8035916	5-14
8035917	5-15
8035918	5-15
8035919	5-15
8035920	5-15
8035921	5-16
8035923	5-19, 5-59
8035924	5-23
8035925	5-23
8035927	5-23, 5-63
8035933	5-23, 5-63
8035936	5-28, 5-68
8035939	5-28, 5-68
8035945	5-27, 5-67
8035946	5-27, 5-67
8035947	5-27, 5-67
8035948	5-27, 5-67
8035951	5-27, 5-67
8035958	5-33
8035959	5-41
8035960	5-41
8035961	5-41
8035962	5-41
8035963	5-41
8035964	5-41
8035965	5-41
8035966	5-41
8035967	5-41
8035968	5-41
8035969	5-41
8035970	5-41
8035971	5-41
8035972	5-41
8035973	5-37, 5-41, 5-75
8035974	5-41
8035977	5-47, 5-81
8035978	5-23, 5-63
8035980	5-23, 5-63
8035981	5-23, 5-63
8035982	5-8, 5-54
8035983	5-10, 5-53
8035984	5-59
8035986	5-63
8035987	5-63
8035994	5-37, 5-75
8035995	5-37, 5-75
8035996	5-37, 5-75
8035997	5-37, 5-75
8035998	5-23, 5-63
8036009	6-13
8036010	6-13
8036011	6-13
8036013	6-13
8036014	6-13
8036015	6-13
8036059	6-9
8036061	6-9
8036064	6-9
8036065	6-9
8036072	6-23
8036088	6-23
8036131	9-79
8036162	9-57
8036185	9-43, 9-47
8036209	12-4
8036212	12-4
8036213	12-4
8036214	12-4
8036215	12-4
8036216	12-4, 12-5, 12-9, 12-10
8036218	12-4, 12-5, 12-9, 12-10
8036219	12-4
8036221	12-4
8036222	12-4
8036229	9-3, 9-5, 9-7, 9-11, 9-13
8036233	9-7, 9-9
8036236	9-11, 9-13, 9-15
8036238	9-13, 9-15
8036241	9-13, 9-15
8036242	9-13, 9-15
8036304	5-28, 5-68
8036305	5-28, 5-68
8036312	5-23, 5-63
8036313	5-23, 5-63
8036318	5-33
8036320	5-33
8036321	5-33
8036328	9-7
8036330	5-38, 5-41, 5-43, 5-75, 5-79
8036331	5-23, 5-27, 5-45, 5-47, 5-63, 5-67, 5-81
8036338	5-37, 5-75
8036413	5-38, 5-41, 5-75
8036417	5-23
8036418	5-25, 5-65
8036419	5-23, 5-63
8036430	5-23
8036431	5-23
8036433	5-123
8036434	5-37, 5-41, 5-76
8036435	5-37, 5-75
8036436	5-45, 5-81
8036438	10-21
8036439	5-23, 5-63
8036440	5-23, 5-63
8036444	5-27, 5-67
8036445	5-27, 5-67
8036447	5-27, 5-67
8036451	12-19
8036456	9-53
8036457	9-53
8036460	9-53
8036463	10-21
8036474	9-11
8036475	9-3, 9-5
8036476	9-37
80364779	21, 9-25, 9-27, 9-31
8036480	9-41
8036481	9-39, 9-41
8036482	9-41
8036483	9-39, 9-41
8036484	9-39, 9-41
8036485	9-39, 9-41
8036493	9-53
8036503	9-44, 9-47
8036504	9-43
8036505	9-43, 9-47
8036506	9-43, 9-47
8036507	9-43, 9-47
8036508	9-43, 9-47
8036509	9-43, 9-47
8036510	9-43, 9-47
8036511	9-43, 9-47
8036512	9-43, 9-47
8036513	9-39, 9-43, 9-47
8036514	9-43, 9-47
8036515	9-44, 9-47
8036516	9-43, 9-47
8036517	9-43, 9-47
8036518	9-43, 9-47
8036519	9-43, 9-47
8036520	9-43, 9-47
8036521	9-43, 9-47
8036523	9-43, 9-47
8036524	9-39
8036525	9-59
8036526	9-59
8036527	9-59
8036528	5-117, 5-119, 10-35
8036529	5-117, 10-35
8036534	6-5
8036535	6-5
8036541	9-39, 9-41
8036543	9-23
8036547	9-19
8036550	9-29
8036551	9-35
8036564	9-53
8036565	9-53
8036566	9-53
8036567	9-53
8036568	9-53
8036569	9-53
8036570	9-53
8036571	9-53
8036572	9-53, 9-54
8036573	9-51, 9-53
8036574	9-51, 9-53
8036575	5-91, 5-93, 5-95, 5-97, 5-99, 5-101, 5-103,

PART NUMBER INDEX

Part Number	Page
	5-105, 5-107, 5-109, 5-111, 5-113
8036577	9-17
8036579	9-57
8036580	9-57
8036581	9-57
8036582	9-57
8036583	9-21, 9-23, 9-25, 9-27, 9-29, 9-31
80365849	21, 9-25, 9-27, 9-31
80365859	21, 9-25, 9-27, 9-31
8036586	9-37
8036587	9-37
8036588	9-37
8036589	9-37
8036590	9-3, 9-7
8036591	9-3
8036592	9-3, 9-5
8036593	9-3, 9-5
8036594	9-3, 9-5
8036596	9-11, 9-13
8036597	9-11
8036598	9-11
8036599	9-33, 9-35
8036600	9-33
8036601	4-7
8036603	10-21
8036605	4-3
8036606	5-63
8036610	5-37, 5-76
8036613	7-15
8036614	7-15
8036615	7-15
8036616	7-15
8036617	7-15
8036618	7-15
8036619	7-15
8036620	7-15, 7-17, 7-19
8036621	7-17
8036622	7-17
8036623	7-17
8036624	7-17, 7-19
8036625	7-17
8036626	6-13
8036627	9-71
8036629	9-19
8036630	9-19
8036631	9-19
8036632	9-19
8036633	9-23, 9-29
8036634	9-23, 9-29
8036635	9-23, 9-29
8036636	9-23, 9-29
8036638	9-7, 9-9
8036639	9-7, 9-9
8036640	9-13, 9-15
8036641	9-35
8036642	9-35
8036643	9-35
8036644	9-13, 9-15
8036646	4-7
8036647	9-51
8036648	9-51
8036649	9-51
8036650	9-51
8036651	9-51
8036652	9-51
8036653	9-51
8036654	6-7
8036655	6-7, 6-19
8036656	6-9, 6-21
8036657	6-21
8036658	6-5, 6-7
8036659	6-5, 6-7
8036660	6-5, 6-7
8036662	6-21
8036663	6-5, 6-7
8036664	6-7
8036665	6-7
8036666	6-5, 6-7
8036667	6-5, 6-7
8036668	6-21
8036669	6-21
8036670	6-21
8036672	6-17
8036673	6-17
8036674	6-17
8036675	6-17
8036676	6-17
8036677	6-23
8036678	6-17, 6-23
8036679	6-23
8036680	6-23
8036681	6-23
8036682	6-23
8036684	6-9
8036685	6-9
8036687	6-9
8036688	6-9
8036689	6-9
8036690	6-9
8036691	6-9
8036692	6-9
8036693	6-9
8036694	6-9
8036695	6-9
8036696	6-9
8036699	6-9
8036700	6-9
8036701	6-9
8036702	6-9
8036703	6-9
8036704	6-9
8036705	6-9
8036706	6-9
8036707	6-9
8036709	6-9
8036710	6-9
8036711	6-9
8036712	6-9
8036714	6-17
8036716	6-17
8036717	6-17
8036718	6-17
8036719	6-17
8036720	6-5
8036721	6-5
8036722	6-5
8036723	6-29
8036724	6-29
8036725	6-29
8036726	6-29
8036727	6-29
8036729	6-17
8036733	3-31, 3-33
8036734	6-17
80367399	21, 9-23, 9-25, 9-57
8036740	9-57
8036750	9-17, 9-19, 12-19
8036751	5-56
8036752	5-59
8036753	5-19, 5-59
8036756	5-23, 5-63
8036757	5-23, 5-63
80367585	23, 5-25, 5-63, 5-65
80367595	23, 5-25, 5-63, 5-65
8036761	6-17, 6-23
8036783	12-17
8036787	9-47
8036805	7-19
8036807	7-19
8036811	12-17
8036817	12-17
8036819	12-17
8036820	12-17
8036821	12-17
8036830	12-17
8036831	9-57
8036832	9-57
8036841	5-14
8036846	5-27, 5-67
8036847	5-31, 5-71, 5-89
8036848	5-33
8036849	5-33
8036852	5-33
8036855	5-33
8036856	5-33
8036858	5-33
8036859	5-33
8036861	5-33
8036862	5-33
8036866	5-41
8036868	4-15, 4-17
8036869	4-15, 4-17
8037080	9-33
8037204	6-5, 6-7
80383410	7-11
80384187	6-9
8040283	5-5
8040284	5-51
8040286	5-5
8040287	5-51
8050001	1-3, 1-5, 2-21
8050085	2-21
8050086	2-21
8065062	3-13, 3-15, 12-15
8065634	3-9
8160102	7-5
8160103	7-7
8180210	4-11, 4-13
8180215	4-11, 4-13
8180216	4-11, 4-13
8180219	4-11
8180311	4-11, 4-13
8180320	4-11, 4-13
8180324	4-11, 4-13
8180325	4-11, 4-13
8180326	4-11, 4-13
8180327	4-11, 4-13
8180329	4-11, 4-13
8180330	4-11, 4-13
8180332	4-11, 4-13
8205655	9-79
8205656	9-3, 9-5, 9-7, 9-11, 9-13
8205657	9-3, 9-5, 9-9
8220357	10-11, 10-15, 10-17, 12-5, 12-21
8220360	10-15, 10-17, 10-19
8220362	10-15, 10-17, 10-24
8220363	10-15, 10-17, 12-5
8220364	10-11, 12-21
8220366	10-11, 12-21
8220553	10-11
8223019	12-5
8223038	12-13
8223040	10-21
8223043	10-21
8223044	10-21
8223050	10-15
8223054	10-15, 10-17, 10-19
8223060	12-5
8223071	10-15, 10-17, 10-19
8223072	10-15, 10-17, 10-19
8223073	12-5
8223074	6-11
8223075	6-11
8223080	12-5, 12-10
8223081	7-9, 7-11
8223232	10-31
8223237	10-33
8223238	7-3
8223240	9-71, 10-31
8223241	10-15, 10-17, 10-19
8223246	10-31

Part Number	Page
8223526	9-71, 10-31
8223527	4-15, 4-17
8223531	6-31
8225119	10-17, 10-19, 10-24, 10-28, 12-5, 12-10, 12-13
8225122	10-11, 12-21
8226234	10-11, 10-24, 10-28
8229233	10-24, 10-28, 12-5
8229234	10-24, 10-28, 12-13
8229235	10-24, 10-28, 12-5
8229236	12-10
8229237	10-24, 10-28, 12-5
8229238	10-24, 10-28, 12-5, 12-10, 12-13
8229243	10-11, 10-24, 10-28
8229259	10-11, 10-24, 10-28, 12-21
8229260	10-11, 12-21
8229262	10-24, 10-28
8229263	10-24, 10-28
8262161	4-3
8262162	4-3
8262167	4-3
8270144	10-3, 10-5, 12-21
8270145	10-3, 10-5, 12-21
8270146	10-3, 10-5, 12-21
8270147	10-3, 10-5, 12-21
8270148	10-3, 10-5, 12-21
8270422	12-21
8270423	12-21
8270424	12-21
8270425	12-21
8270426	12-21
8270427	11-3, 12-21
8270428	4-3
8270621	10-33
8270627	10-15, 10-17, 10-19
8270628	10-24, 12-5
8272031	4-3
8273029	4-15, 4-17
8274022	4-7
8275042	4-19
8275044	4-19
8275212	8-3, 8-7
8275240	4-19, 4-21
8275247	4-21
8276019	6-31
8277172	1-7
8278020	4-11, 4-13
8278040	4-3, 5-3
8278041	6-3
8301453	9-61, 9-63, 9-65, 9-67, 9-69
8301456	3-17
8302446	2-21
8303005	7-9
8303097	2-5, 2-7, 2-9, 4-11, 4-13
8303107	4-11, 4-13
8303261	7-3
8303265	2-11, 2-13
8303515	4-7
8303519	9-61, 9-63, 9-65, 9-67, 9-69
8303528	4-7, 4-15, 4-17, 8-4, 8-8, 8-31, 10-7, 10-9, 10-11, 10-31, 10-35
8303531	2-21
8303533	10-7, 10-9, 10-11, 10-12, 10-31
8303541	8-35, 8-37, 9-61
8303544	6-11, 6-31, 8-35, 8-37, 8-49, 8-51, 8-53, 10-11, 12-21
8303545	10-7, 10-9, 10-11, 12-21
8303550	4-7, 8-3, 8-7, 8-11, 8-15, 8-19, 8-23, 8-27, 8-31, 8-59, 9-43
8303551	2-3, 2-5, 2-7, 2-9, 2-11, 2-13, 4-19, 4-21
8303606	2-11, 2-13, 4-11, 4-13, 6-29, 9-61, 9-63, 9-67, 9-69, 12-4, 12-5, 12-9, 12-10
8303607	6-11, 8-55, 12-5
8303611	2-3, 2-5, 4-11, 4-13, 8-39, 9-65
8303618	2-19, 4-7
8303622	8-3, 8-7
8303624	7-5, 7-9
8303625	1-9
8303626	1-9, 3-17, 3-19, 8-3
8303634	3-5, 3-9, 3-13, 3-15, 3-31, 3-33
8303656	4-11
8303658	3-31, 3-33
8303670	6-31
8303674	6-13
8303675	6-25, 7-13, 8-3, 8-7
8303681	6-25
8303703	8-4, 8-8
8303715	3-13, 3-15, 6-9
8303739	3-9, 7-3
8303743	3-31
8303753	2-9
8303755	1-3, 1-5, 2-7
8303769	2-9, 5-3, 12-5, 12-10
8303770	3-9
83037771	7-, 2-11, 2-13, 10-7, 10-9, 10-12
8303778	2-13, 2-21
8303783	2-7, 2-9, 6-11, 6-13, 6-15, 8-23, 8-27, 9-61, 9-63, 9-65, 9-67, 9-69, 9-73
8303784	1-7, 2-7, 2-11, 2-13, 8-3, 8-7, 9-3, 9-5, 9-7, 9-9, 12-5, 12-9
83037857	7-, 9-3, 9-5, 9-7, 9-9
8303790	2-17, 4-3, 5-3, 7-5, 8-3, 8-7
8303798	2-7, 2-9, 2-21, 4-11, 4-13, 4-19, 4-21, 5-3, 6-11, 8-3, 8-7, 9-71, 10-11, 10-31, 12-5, 12-10
8303799	6-27, 7-5
8303837	7-5, 7-7
8303992	10-28
8305003	10-7, 10-9, 10-11, 12-21
8305006	10-7, 10-9, 10-11
8305012	3-17, 3-19
8305038	1-7, 4-19, 4-21, 7-5, 7-7, 7-9, 10-3, 10-5, 10-7, 10-9, 10-11, 10-31
8305043	4-11, 4-13, 7-5, 7-7, 7-9, 8-23, 8-27, 8-31, 9-61, 9-63, 9-65, 9-67, 9-69, 9-73, 12-4, 12-5, 12-9, 12-10
8305044	7-3, 7-7, 8-3, 8-7, 10-7, 10-9, 10-11
8305047	6-31, 10-11, 10-33, 12-21
8305402	7-5, 7-7
8305624	3-31, 3-33, 6-3, 7-9
8305626	3-9, 6-13, 6-15, 6-31
8305630	2-7, 2-9, 2-11, 2-13, 4-11, 4-13, 6-31, 7-5, 7-7, 7-9
8305637	12-5
83056387	3-, 8-11, 8-15, 8-19, 8-23, 8-27, 8-31
8305643	3-5, 3-9, 3-13, 3-15, 3-31, 3-33, 4-3, 5-3
8305644	1-9, 3-17, 3-19
83056453	9-, 4-11, 4-13, 6-25, 12-4, 12-9
8305646	2-19
8305647	2-3, 2-5
8305652	2-3, 2-5, 10-15, 10-17, 10-19, 10-33, 12-21
8305654	1-3, 1-5, 1-7, 2-21, 4-15, 4-17, 8-3, 8-7, 9-43, 10-3, 10-5, 10-15, 10-17, 10-19
8305655	1-5, 2-3, 2-5, 2-15
8305916	7-13
8307003	10-7, 10-9, 10-11, 12-21
8307004	10-7, 10-9, 10-11
8307005	8-4, 8-8
8307007	3-17, 3-19
8307023	10-7, 10-9, 10-11, 10-31
8307025	1-9, 2-17, 2-19
8307104	9-61, 9-63, 9-65, 9-67, 9-69
8307106	4-11, 6-13, 6-15
8307109	8-23, 8-27, 8-31
8307110	6-25
8307112	3-17, 3-19, 7-5, 7-9
8307113	2-3, 2-5
8307202	7-9
8307203	1-7, 3-9, 4-11, 4-13, 6-13, 6-15, 6-31
8307204	8-11, 8-15, 8-19, 8-23, 8-27, 8-31
8307205	6-13
8307206	1-9
8307219	2-3, 2-5, 6-11, 8-49, 8-55, 9-61, 9-63, 9-65, 9-67, 9-69, 10-7, 10-9, 10-11, 10-15, 10-17, 10-19, 10-33, 12-5, 12-21
83072201	3-, 1-5, 2-9, 4-7, 5-3, 7-3, 7-7, 8-3, 8-7, 9-3, 9-5, 9-7, 9-9, 10-7, 10-9, 10-11
83072211	3-, 1-5, 2-3, 2-5, 2-7, 2-9, 2-11, 2-13, 2-21, 4-11, 4-13, 6-11, 6-31, 8-3, 8-7, 9-3, 9-5, 9-7, 9-9, 9-71, 10-3, 10-5, 10-7, 10-9, 10-11, 10-31, 12-21
8307222	2-3, 2-5, 4-11, 4-13, 6-11, 6-29, 7-3, 8-31, 10-3, 10-5, 10-15, 10-17, 10-19
8307703	2-19
83079042	11-, 2-13, 3-13, 3-15
8307912	2-21

PART NUMBER INDEX

Part Number	Page
8307913	2-21
83079182	11, 2-13, 3-13, 3-15
8310009	8-41
8310028	8-23, 8-27, 8-31
8310030	2-3, 8-8, 9-61, 9-63, 9-65, 9-67, 9-69
8310046	10-3, 10-5
8310061	5-3
8310070	1-5, 12-21
8310085	7-5, 7-7
8310093	2-11, 2-13
8310125	2-3, 2-13
8310136	6-9, 6-17
8310160	3-13, 3-15
8310161	3-13, 3-15
83101641	3, 1-5, 1-9, 2-3, 2-5, 8-4, 8-8
8310188	10-17, 10-19
8310194	9-61, 9-63, 9-65, 9-67, 9-69
8310211	9-61, 9-63, 9-65, 9-67, 9-69
8310217	2-11, 2-13, 2-17
8310218	2-21, 6-27
8310220	2-21
8310266	2-15
8310276	2-15
8310285	1-3, 1-5
8310288	4-3, 5-3
83102932	5, 8-11, 8-23, 8-27, 8-31, 8-45
8310302	3-31, 3-33
8310308	1-3, 1-5, 1-9, 9-61, 9-63, 9-65, 9-67, 9-69
8310341	12-4, 12-9
8310354	2-9, 4-3
8310358	10-21
8310375	6-3
8310379	5-3
8310382	6-11
8310390	6-27, 10-17, 10-19, 10-24
8310392	10-21
8310410	7-9
8310414	8-3, 8-7
8310424	1-3, 1-5, 2-21
8310426	1-5, 2-15
8310435	3-33
8310453	7-3
83104767	3, 8-11, 8-15, 8-19, 8-23, 8-27, 8-31, 8-45
8310491	1-7
8310507	7-3, 7-5, 7-7, 7-9
8310508	7-3, 7-5, 7-7, 7-9
8310514	2-9
8310534	6-31
8310539	1-3, 1-5
8310592	6-31
8310598	2-7, 2-9
8310600	2-7, 2-11
8310604	9-61, 9-63, 9-65, 9-67, 9-69
8310606	2-11, 2-13
8310614	1-7
8310617	4-15, 4-17
8310620	2-7, 2-9
8310621	1-7, 4-13, 4-19, 4-21
8310623	8-3, 8-7
8310625	1-3, 1-5, 2-11, 2-13, 2-21, 6-27, 7-3, 9-3, 9-5, 9-7, 9-9
8310627	2-3, 2-5
8310628	7-7
8310629	2-3, 2-5
8310630	2-3, 2-5
8310638	9-61, 9-63, 9-65, 9-67, 9-69
8310640	10-24
8310641	10-24, 10-28
8310642	10-24
8310647	10-3, 10-5, 10-15, 10-17, 10-19
8310650	10-7, 10-9, 10-11, 10-12, 10-31
8310651	2-17
8310652	1-3, 1-5
8310655	2-21
8310656	1-3, 1-5
8310657	1-3, 1-5, 2-3, 2-5, 2-21
8310662	2-21
8310664	1-7
8310668	9-71
8310671	5-3
8310672	5-3
8310683	6-31, 10-15, 10-17, 10-19
8310686	2-3, 2-5, 2-11, 2-13
8310687	10-11, 10-15, 10-17, 10-19, 10-33, 12-21
8310689	2-21
8310690	6-27
8310693	1-7
8310695	7-7
8310700	2-15
8310702	6-15
8310703	8-23, 8-27, 8-31
8310705	2-7
8310706	2-11, 2-13
8310707	2-11, 2-13
8310709	1-5, 12-21
8310711	9-61, 9-63, 9-65, 9-67, 9-69
8310713	1-5
8310714	9-61, 9-63, 9-65, 9-67, 9-69
8310715	7-5, 7-7, 7-9
8310716	7-5, 7-7, 7-9
8310726	6-33
8310728	7-9
8310732	7-9
8310736	6-31
8310737	6-31
8310746	7-5, 7-9
8310748	2-3, 2-5
8320053	9-71
8320054	9-71
8320055	9-71
8320270	4-7
8320275	4-3
8320278	4-7
8321701	1-3, 1-5
8340038	1-7
8342808	6-9
8342813	1-7
83681331	4-21
8380008	3-21
8382017	3-23, 3-27
8405009	4-7
8405104	4-11, 4-13
8405203	6-31
8405209	8-4, 8-8
8405404	4-15, 4-17
8406105	10-35, 12-5
8406201	10-3, 10-5
8406302	3-23
8410001	8-3, 8-7
8410007	4-15, 4-17
8410009	6-29, 8-3, 8-7
8410013	4-7
8410021	4-17
84200533	9, 3-11, 3-13, 3-15, 3-23, 3-31, 3-33, 8-23, 8-27, 8-31
84200553	9, 3-11, 3-13, 3-15, 3-23, 3-31, 3-33, 8-23, 8-27, 8-31
8420229	4-7
8430032	8-11, 9-75
8430033	9-75
8430034	9-71
8430048	6-29
8430081	8-11, 8-45, 9-75
8430098	8-45, 9-75
8430099	8-3, 8-7
8440239	9-39
8440240	9-41
8466306	6-11
8500061	12-13
8500066	12-13
8520001	1-3, 1-5, 2-11, 2-13, 2-17, 2-21
8520003	2-19
85200133	9, 9-11, 9-13, 9-15, 9-17, 9-19
8520021	9-33, 9-35
8522007	2-9
85220122	11, 2-13, 2-17, 2-19
8522050	2-3, 2-5, 2-7, 2-9, 2-11, 2-13
8522051	2-3, 2-5, 2-7, 2-11, 2-13
8525011	9-29
85260071	9, 2-3, 2-5, 2-7, 2-9, 2-11, 2-13, 2-15, 4-21, 5-38, 5-41, 8-35, 8-37, 8-49, 8-51, 8-53, 9-3, 9-5, 9-7, 9-9, 12-17
8526011	9-3, 9-5, 9-7, 9-9, 9-11, 9-13, 9-15, 9-17, 9-19, 9-21, 9-23, 9-25, 9-27, 9-31, 9-33, 9-35, 9-37, 12-15, 12-17, 12-19
8526036	12-15
8526052	5-121
8526056	5-121
8530016	6-29
8530030	8-3, 8-7
8530035	8-3, 8-7
8530036	8-3, 8-7
8530041	4-7
8540016	6-29
8540231	6-29
8546407	8-3
8551001	4-15, 4-17
8554008	6-17
8580315	3-13, 3-15
8581036	8-4, 8-8, 8-57
85840013	9, 3-13, 3-15, 6-21, 6-23, 7-11, 10-7, 10-9, 10-12, 10-15, 10-17, 10-19, 10-31, 10-33, 10-35, 12-5, 12-10, 12-13, 12-21
8584003	7-5, 7-7, 7-9, 8-23, 8-27, 8-31, 10-12
8584018	6-21, 6-23, 12-5, 12-10, 12-13
8630003	3-33, 8-23
8630004	8-43
8630005	8-57
8630006	8-8, 8-57
8630007	8-57, 8-59
8630008	8-3, 8-7
8630009	8-3, 8-7
8630019	5-3

Part Number	Page
8630020	7-3, 7-5, 7-7, 7-9
8630022	2-11, 2-13
8630026	2-21
8630027	7-9
8640028	3-9, 3-13, 3-31, 3-33
8640029	3-9, 3-13, 3-31, 3-33
8640032	3-9, 3-13, 3-31, 3-33
8640123	8-3, 8-7
8640208	8-3, 8-7
8640903	8-57
8642001	3-9
8642207	3-13, 3-15
8642235	3-9
8642236	2-17, 2-19
8660016	6-31
8660017	6-31
8700125	7-3
8700126	7-5, 7-7, 7-9
8702162	1-7
8702163	1-7
8702164	1-7
8720017	10-15
8721032	8-45
8742009	9-73
8750001	8-4, 8-8
8750005	8-4, 8-8
8750017	4-7, 7-5, 7-7, 8-12, 8-15, 8-19, 8-41, 8-45, 10-7, 10-9, 10-11, 10-31, 10-35
8750018	8-35, 8-37
8750020	8-35, 8-37
8750022	4-7, 8-3, 8-4, 8-7
8750024	7-5, 7-7, 8-4, 8-8, 10-7, 10-9, 10-11, 10-31, 10-35
8750025	4-7, 8-3, 8-4, 8-7, 8-59, 10-7, 10-9, 10-11, 10-31, 10-35
87500278	23, 8-27, 8-31, 8-41
8750037	8-12, 8-45
87500388	15, 8-19, 8-41, 8-45
8750039	7-5, 7-7, 10-7, 10-9, 10-11, 10-31, 10-35
8750040	8-59
8750042	8-12, 8-45
8750043	4-7, 8-4, 8-8, 8-12, 8-15, 8-19, 8-45, 10-7, 10-9, 10-12, 10-31, 10-35
8769122	8-23, 8-27, 8-31
8769123	8-11, 8-15, 8-19, 8-23, 8-27, 8-31, 8-45
87691268	15, 8-19, 8-39, 8-45
8769127	8-15, 8-19, 8-45
8769128	8-23, 8-27, 8-31, 8-39, 8-41
8769132	3-13, 3-15
8770016	3-13, 3-15
8770085	8-15, 8-19
8770091	8-59
8770105	8-37
8770111	8-35, 8-49, 8-51
8770112	9-43
8770115	8-28, 8-39
8770117	8-15, 8-24, 8-28
8770125	8-24
8770127	8-28
8770129	8-15, 8-19, 8-23, 8-27, 8-31
8770131	8-45
8770136	8-23, 8-27, 8-31
87701408	35, 8-49, 8-51, 9-75
8770152	8-24
8770154	8-4, 8-35
8770163	8-15
8770196	8-59
8770214	8-3
8770223	9-71
8770282	8-15
8770299	8-15, 8-19
8770300	8-15, 8-19
8780031	5-125, 5-127
8780036	5-129
8780045	5-125, 5-127
8780048	5-129
8780050	5-129
8780264	5-125, 5-127
8786514	5-125, 5-127, 5-129
8786572	5-3
8786573	5-3
8841322	5-115
8864057	6-13
8864058	6-13
8866266	6-3
8866341	4-11, 4-13
8866441	3-43
8866442	3-43
8866443	3-43
8866444	3-43
8866445	3-43
8866446	3-43
8866464	3-43
8866514	6-27
8866516	6-27
8866530	6-27
8866560	3-43
8866561	3-43
8866625	6-27
88671001	3-11
88761001	3-9
8880218	5-123
8902175	8-24
8902309	7-15
8902310	8-45
8902313	9-53
8902316	7-3
8902317	9-51
8902321	9-59
8902322	9-59
8902329	9-43, 9-47
8902330	7-17
8902335	7-19
8902842	9-79
8902856	8-4, 8-8
8902862	8-35, 8-37
90022230	9-77
90200003	3-5, 3-7, 3-9, 3-11, 3-13, 3-15, 3-31, 3-33
90451058	3-5, 3-9, 3-31, 3-33
90551013	3-5, 3-9, 3-13
90554016	3-25, 3-47
90554017	3-47
90554018	3-47
90554020	3-25
90554042	3-25
90554045	9-81
90554054	3-25
90554062	3-25, 3-47
90554076	3-25, 3-47
90554080	3-35
91044080	9-77
91344043	6-9
91403413	3-9, 3-11, 3-13, 3-15, 3-23, 3-31, 3-33, 8-23, 8-27, 8-31
91403414	3-9, 3-11, 3-13, 3-15, 3-23, 3-31, 3-33, 8-23, 8-27, 8-31
91403601	4-21
91404298	6-19
91404299	11-4
91404301	6-19
91563136	9-71
91563164	6-15
91565094	3-35

PART NUMBER INDEX

Part Number	Page	Part Number	Page	Part Number	Page	Part Number	Page

An Oshkosh Corporation Company

JLG Industries, Inc.
1 JLG Drive
McConnellsburg PA. 17233-9533
USA
Phone: +1-717-485-5161
Customer Support Toll Free: 1-877-554-5438
Fax: +1-717-485-6417

JLG Worldwide Locations

JLG Industries (Australia)
P.O. Box 5119
11 Bolwarra Road
Port Macquarie
N.S.W. 2444
Australia
Phone: +61 265 811 111
Fax: +61 265 810 122

JLG Latino Americana Ltda.
Rua Eng. Carlos Stevenson,
80-Suite 71
13092-310 Campinas-SP
Brazil
Phone: +55 193 295 0407
Fax: +55 193 295 1025

JLG Industries (UK) Ltd
Bentley House
Bentley Avenue
Middleton
Greater Manchester
M24 2GP
England
Phone: +44 (0)161 654 1000
Fax: +44 (0)161 654 1001

JLG France SAS
Z.I. de Baulieu
47400 Fauillet
France
Phone: +33 (0)5 53 88 31 70
Fax: +33 (0)5 53 88 31 79

JLG Deutschland GmbH
Max-Planck-Str. 21
D - 27721 Ritterhude-Ihlpohl
Germany
Phone: +49 (0)421 69 350 20
Fax: +49 (0)421 69 350 45

JLG Equipment Services Ltd.
Rm 1107 Landmark North
39 Lung Sum Avenue
Sheung Shui N.T.
Hong Kong
Phone: +852 2639 5783
Fax: +852 2639 5797

JLG Industries (Italia) s.r.l.
Via Po. 22
20010 Pregnana Milanese - MI
Italy
Phone: +39 029 359 5210
Fax: +39 029 359 5845

JLG Europe B.V.
Polaris Avenue 63
2132 JH Hoofddorp
The Netherlands
Phone: +31 (0)23 565 5665
Fax: +31 (0)23 557 2493

JLG Polska
Ul. Krolewska
00-060 Warsawa
Poland
Phone: +48 (0)914 320 245
Fax: +48 (0)914 358 200

JLG Industries (Scotland)
Wright Business Centre
1 Lonmay Road
Queenslie, Glasgow G33 4EL
Scotland
Phone: +44 (0)141 781 6700
Fax: +44 (0)141 773 1907

Plataformas Elevadoras
JLG Iberica, S.L.
Trapadella, 2
P.I. Castellbisbal Sur
08755Castellbisbal, Barcelona
Spain
Phone: +34 93 772 4 700
Fax: +34 93 771 1762

JLG Sverige AB
Enkopingsvagen 150
Box 704
SE - 176 27 Jarfalla
Sweden
Phone: +46 (0)850 659 500
Fax: +46 (0)850 659 534